Technics

sx-WSA1/sx-WSA1R REFERENCE GUIDE

Contents

DIGITAL EFFECT

EFFECT	PARAMETER	RANGE
CELESTE1·2	DEPTH	0 – 50
	SPEED	0 – 50
	DETUNE	–50 – +50
	DELAY	0 – 50
	BALANCE	0 – 100
	INTENSITY	–50 – +50
	REVERB DEPTH	–50 – +50
CHORUS1·2	DEPTH	0 – 50
	SPEED	0 – 50
	DETUNE	–50 – +50
	DELAY	0 – 50
	BALANCE	0 – 100
	INTENSITY	–50 – +50
	REVERB DEPTH	–50 – +50
ENSEMBLE 1·2	DEPTH1	0 – 50
	SPEED1	0 – 50
	DEPTH2	0 – 50
	SPEED2	0 – 50
	DETUNE	–50 – +50
	DELAY	0 – 50
	INTENSITY	–50 – +50
	REVERB DEPTH	–50 – +50
TREMOLO	DEPTH	0 – 50
	SPEED	0 – 50
	WAVE	SIN/TRI/SQR/SAW
	BALANCE	0 – 100
	INTENSITY	–50 – +50
	REVERB DEPTH	–50 – +50

EFFECT	PARAMETER	RANGE
ORGAN TREMOLO	DEPTH1	0 – 50
	SPEED1	0 – 50
	DEPTH2	0 – 50
	SPEED2	0 – 50
	INTENSITY	–50 – +50
	REVERB DEPTH	–50 – +50
SINGLE DELAY	DELAY	0 – 50
	DETUNE	–50 – +50
	KEY SHIFT	–24 – +24
	BALANCE	0 – 100
	INTENSITY	–50 – +50
	REVERB DEPTH	–50 – +50
REPEAT DELAY	SPEED	0 – 30
	DECAY	0 – 30
	SUSTAIN	0 – 30
	RELEASE	0 – 30
	INTENSITY	–50 – +50
	REVERB DEPTH	–50 – +50
SOLO EFFECT 1	DISTORTION	ON / OFF
	TOUCH DEPTH	0 – 50
	DEPTH	0 – 50
	REVERB DEPTH	–50 – +50
SOLO EFFECT 2	DISTORTION	ON / OFF
	TOUCH DEPTH	0 – 50
	DEPTH	0 – 50
	INTENSITY	–50 – +50
	REVERB DEPTH	–50 – +50

DSP EFFECT

NO OPERATION

EFFECT No. ;0

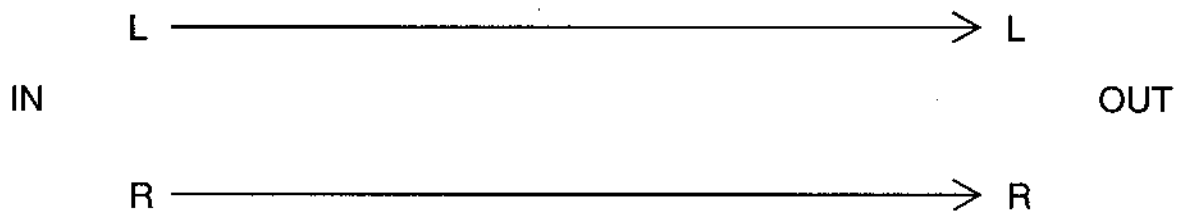

			MIDI DATA	MIDI VALUE
No effect is applied.	———	———	———	———

———

ROOM REVERB 1.2 (REV only)

EFFECT No. ; 16,17

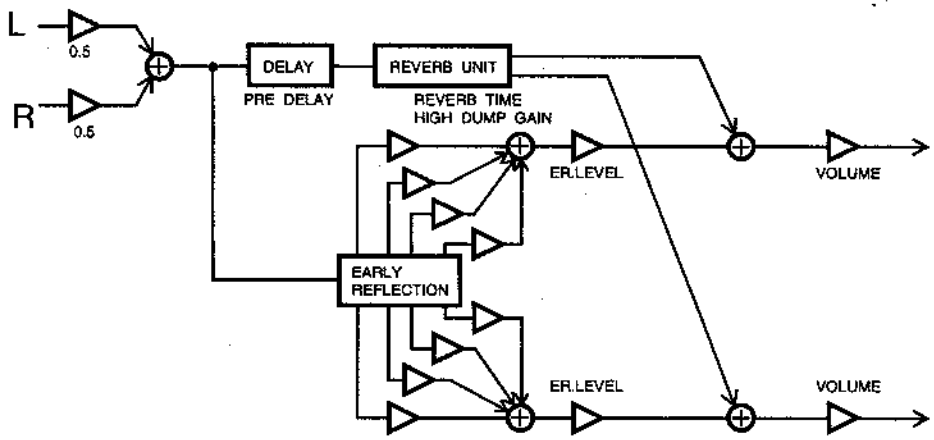

				MIDI DATA	MIDI VALUE
Reverberations sound as if produced in a room(indoors).	► REVERB TIME	0.1	– 10s	＊1	1
	PRE DELAY	0	– 200ms	←	2
	HIGH DUMP GAIN	–24	– 0dB	＊2	3
	EARLY REFL LEVEL	0	– 99	←	4
	• VOLUME	0	– 99	←	5

REVERB TIME	:The time it takes for the reverb effect to fade out.
PRE DELAY	:The time elapsed between the beginning of the reverb effect.
HIGH DUMP GAIN	:Adjusts the degree of dumping in the treble range.
EARLY REFL LEVEL	:Adjusts the early-reflection level.
VOLUME	:Volume of the sound to the effect is applied.

(• : Parameter which can be assigned to DYNAMIC CONTROL, ►: default)

(＊1～＊18 : Refer to page33)

DSP EFFECT

PLATE REVERB 1.2 (REV only)

EFFECT No. ;18,19

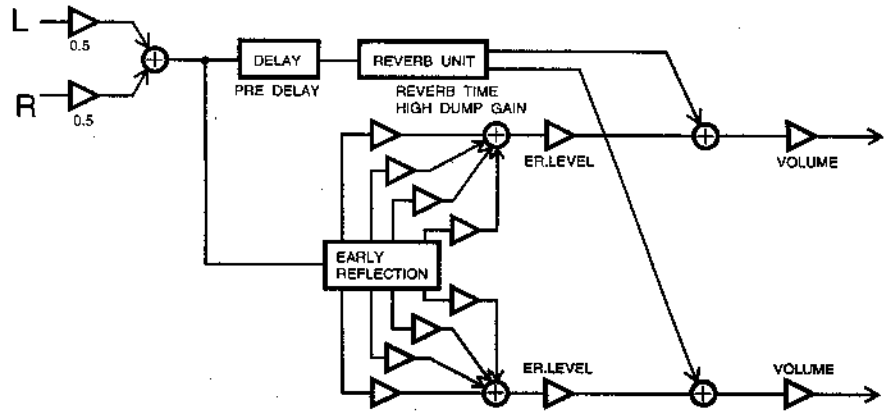

A type of reverberation obtained from a reverb unit which utilizes the vibrations of a metal plate.

			MIDI DATA	MIDI VALUE
▶ REVERB TIME	0.1	– 10s	＊1	1
PRE DELAY	0	– 200ms	←	2
HIGH DUMP GAIN	–24	– 0dB	＊2	3
EARLY REFL LEVEL	0	– 99	←	4
• VOLUME	0	– 99	←	5

RREVERB TIME	:The time it takes for the reverb effect to fade out.
PRE DELAY	:The time elapsed between the beginning of the reverb effect.
HIGH DUMP GAIN	:Adjusts the degree of dumping in the treble range.
EARLY REFL LEVEL	:Adjusts the early-reflection level.
VOLUME	:Volume of the sound to the effect is applied.

CONCERT REVERB 1.2 (REV only)

EFFECT No. ; 20,21

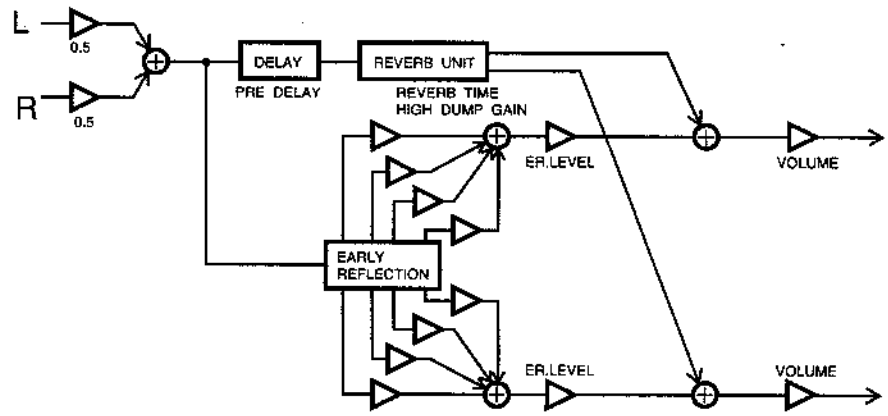

Reverberations sound as if produced in a concert hall.

			MIDI DATA	MIDI VALUE
▶ REVERB TIME	0.4	– 30s	＊1	1
PRE DELAY	0	– 200ms	←	2
HIGH DUMP GAIN	–24	– 0dB	＊2	3
EARLY REFL LEVEL	0	– 99	←	4
• VOLUME	0	– 99	←	5

REVERB TIME	:The time it takes for the reverb effect to fade out.
PRE DELAY	:The time elapsed between the beginning of the reverb effect.
HIGH DUMP GAIN	:Adjusts the degree of dumping in the treble range.
EARLY REFL LEVEL	:Adjusts the early-reflection level.
VOLUME	:Volume of the sound to the effect is applied.

(• : Parameter which can be assigned to DYNAMIC CONTROL, ▶: default)

(＊1～＊18 : Refer to page33)

DSP EFFECT

DARK REVERB 1.2 (REV only)

EFFECT No.; 22,23

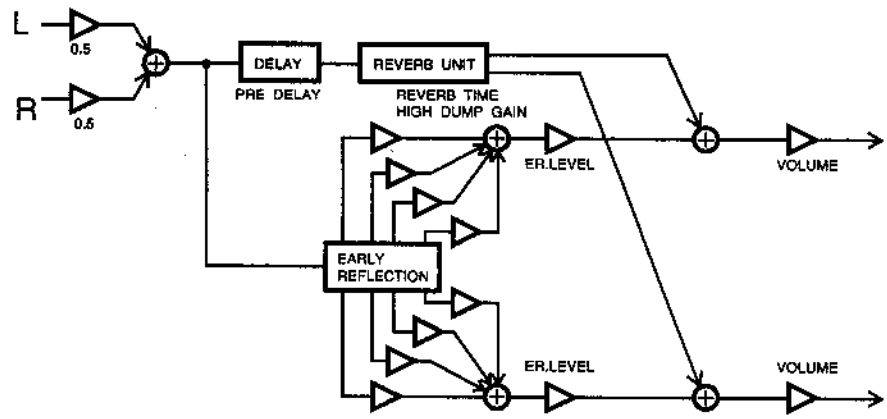

				MIDI DATA	MIDI VALUE
Reverberations evoke images of darkness.	▶ REVERB TIME	0.4	– 30s	*1	1
	PRE DELAY	0	– 200ms	←	2
	HIGH DUMP GAIN	–24	– 0dB	*2	3
	EARLY REFL LEVEL	0	– 99	←	4
	• VOLUME	0	– 99	←	5

REVERB TIME :The time it takes for the reverb effect to fade out.
PRE DELAY :The time elapsed between the beginning of the reverb effect.
HIGH DUMP GAIN :Adjusts the degree of dumping in the treble range.
EARLY REFL LEVEL :Adjusts the early-reflection level.
VOLUME :Volume of the sound to the effect is applied.

BRIGHT REVERB 1.2 (REV only)

EFFECT No.; 24,25

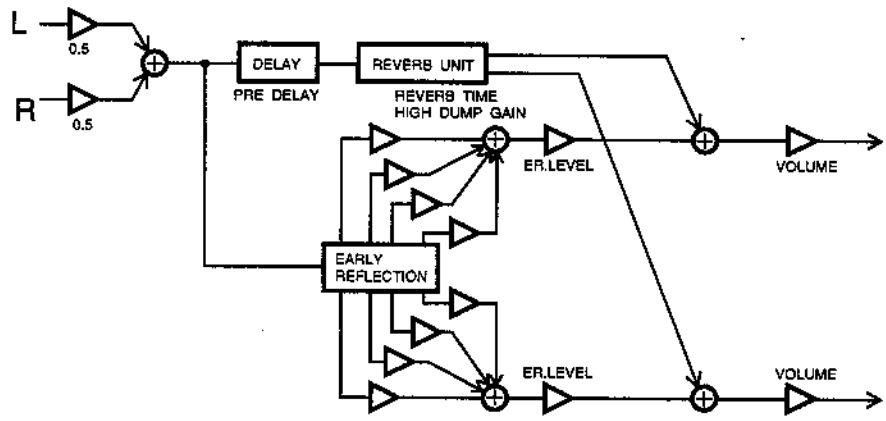

				MIDI DATA	MIDI VALUE
Reverberations evoke images of brightness.	▶ REVERB TIME	0.4	– 30s	*1	1
	PRE DELAY	0	– 200ms	←	2
	HIGH DUMP GAIN	–24	– 0dB	*2	3
	EARLY REFL LEVEL	0	– 99	←	4
	• VOLUME	0	– 99	←	5

REVERB TIME :The time it takes for the reverb effect to fade out.
PRE DELAY :The time elapsed between the beginning of the reverb effect.
HIGH DUMP GAIN :Adjusts the degree of dumping in the treble range.
EARLY REFL LEVEL :Adjusts the early-reflection level.
VOLUME :Volume of the sound to the effect is applied.

(• : Parameter which can be assigned to DYNAMIC CONTROL, ▶: default)
(*1～*18 : Refer to page33)

DSP EFFECT

WAVE REVERB 1.2 (REV only)

EFFECT No.; 26,27

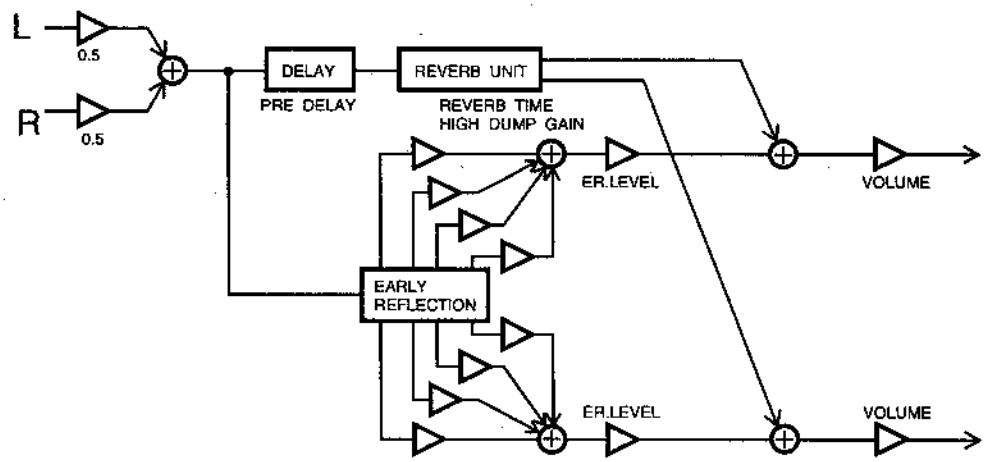

			MIDI DATA	MIDI VALUE
Reverberations evoke images of waves.	► REVERB TIME	0.4 – 30s	＊1	1
	PRE DELAY	0 – 200ms	←	2
	HIGH DUMP GAIN	–24 – 0dB	＊2	3
	EARLY REFL LEVEL	0 – 99	←	4
	• VOLUME	0 – 99	←	5

REVERB TIME	:The time it takes for the reverb effect to fade out.
PRE DELAY	:The time elapsed between the beginning of the reverb effect.
HIGH DUMP GAIN	:Adjusts the degree of dumping in the treble range.
EARLY REFL LEVEL	:Adjusts the early-reflection level.
VOLUME	:Volume of the sound to the effect is applied.

CHORUS

EFFECT No. ;1

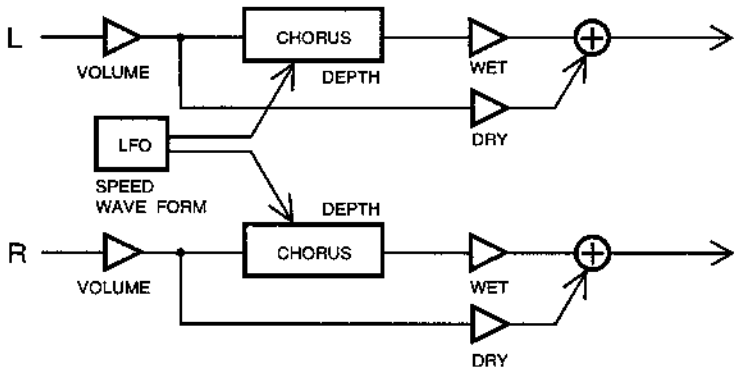

			MIDI DATA	MIDI VALUE
A natural fullness and richness is achieved by adding a sound of a slightly different pitch to the original sound.	• WET	0 – 99	←	1
	• DEPTH	0 – 99	←	2
	► LFO SPEED	0 – 40.2Hz	＊3	3
	LFO WAVEFORM	sin,tri,square	＊4	4
	• VOLUME	0 – 99	←	5

WET	:The proportion at which the original sound and the effect-altered sound are mixed.
DEPTH	:Depth of the effect.
LFO SPEED	:Transmission frequency of the LFO(low frequency oscillator)modulator.
LFO WAVEFORM	:Waveform of the LFO(low frequency oscillator)modulator.
VOLUME	:Volume of the sound to the effect is applied.

(• : Parameter which can be assigned to DYNAMIC CONTROL, ►: default)
(＊1～＊18 : Refer to page33)

DSP EFFECT

MODULATED CHORUS

EFFECT No.; 2

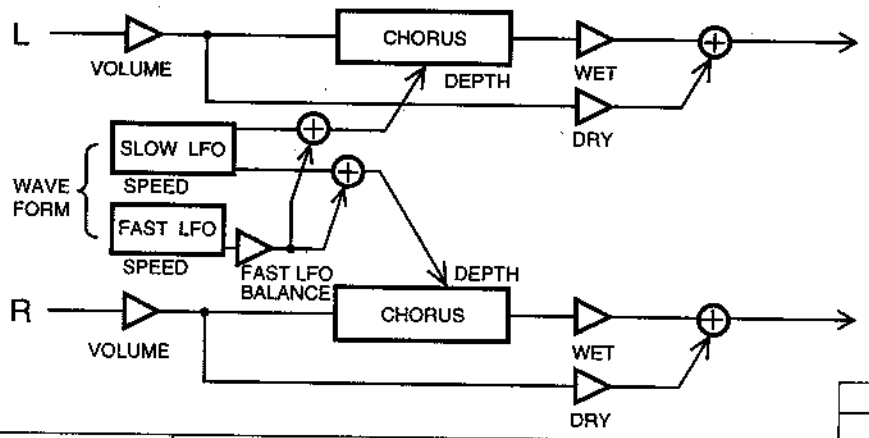

A differently modulated chorus in which the swell is emphasized.

		MIDI DATA	MIDI VALUE
• WET	0 – 99	←	1
• DEPTH	0 – 99	←	2
▶ SLOW LFO SPEED	0 – 40.2Hz	*3	3
• FAST LFO SPEED	0 – 40.2Hz	*3	4
• FAST LFO BALANCE	0 – 99	←	5
LFO WAVEFORM	sin,tri,square	*4	6
• VOLUME	0 – 99	←	7

WET	:The proportion at which the original sound and the effect-altered sound are mixed.
DEPTH	:Depth of the effect.
LFO SPEED	:Transmission frequency of the LFO (low frequency oscillator)modulator.
FAST LFO BALANCE	:The degree to which the fast LFO is applied.
LFO WAVEFORM	:Waveform of the LFO(low frequency oscillator)modulator.
VOLUME	:Volume of the sound to the effect is applied.

ENHANCER

EFFECT No.; 3

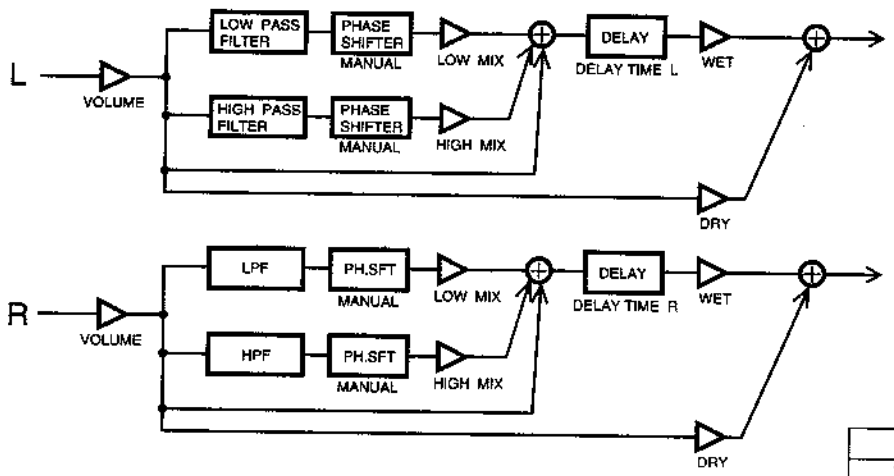

Emphasizes a specific frequency by shifting the phrase.
Clarifies sound profile.

		MIDI DATA	MIDI VALUE
• WET	0 – 99	←	1
▶ MANUAL	0 – 99	←	2
• LOW MIX	0 – 99	←	3
• HIGH MIX	0 – 99	←	4
• DELAY TIME L	0 – 350ms	←	5,6
• DELAY TIME R	0 – 350ms	←	7,8
• VOLUME	0 – 99	←	9

WET	:The proportion at which the original sound and the effect-altered sound are mixed.
MANUAL	:Center frequency to which the effect is applied.
MIX	:Adjusts the mix of the original sound and the harmonic.
DELAY TIME	:Delay time.
VOLUME	:Volume of the sound to the effect is applied.

(• : Parameter which can be assigned to DYNAMIC CONTROL, ▶: default)
(*1~*18 : Refer to page33)

DSP EFFECT

FLANGER

EFFECT No.; 4

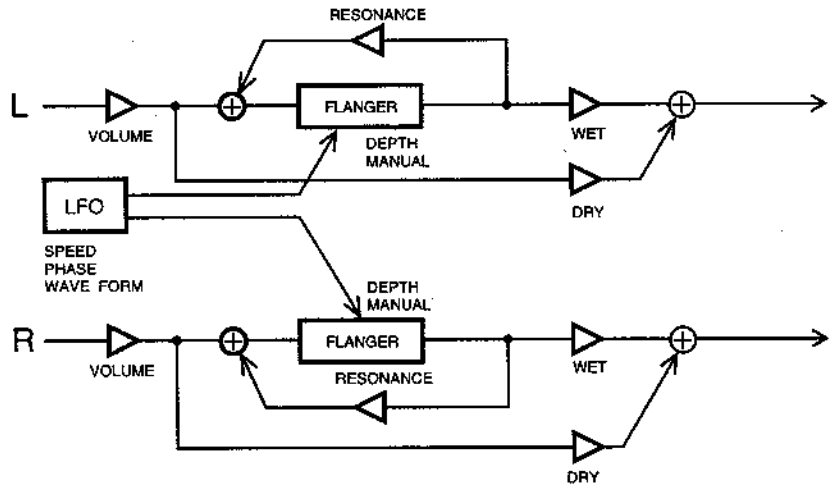

			MIDI DATA	MIDI VALUE
An undulation is added, giving an intensity to sounds having many overtones(harmonics).	• WET	0 – 99	←	1
	• DEPTH	0 – 99	←	2
	• LFO SPEED	0 – 40.2Hz	*3	3
	► RESONANCE	–99 – +99	←	4
	MANUAL	0 – 99	←	5
	PHASE	0 – 180degree	←	6
	LFO WAVEFORM	sin,tri,square	*4	7
	• VOLUME	0 – 99	←	8

WET	:The proportion at which the original sound and the effect-altered sound are mixed.
DEPTH	:Depth of the effect.
LFO SPEED	:Transmission frequency of the LFO (low frequency oscillator)modulator.
RESONANCE	:Feedback volume (inverted when a minus value).
MANUAL	:Center frequency to which the effect is applied.
PHASE	:Phase difference between left and right modulation.
LFO WAVEFORM	:Waveform of the LFO(low frequency oscillator)modulator.
VOLUME	:Volume of the sound to the effect is applied.

(• : Parameter which can be assigned to DYNAMIC CONTROL, ►: default)
(*1～*18 : Refer to page33)

DSP EFFECT

PHASER

EFFECT No.; 5

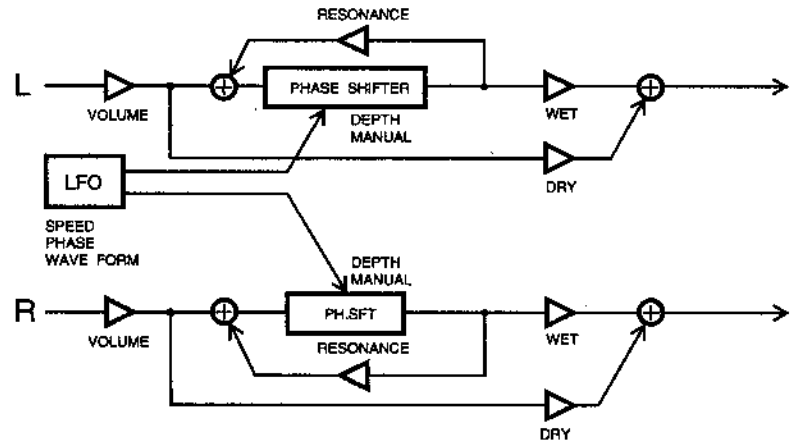

			MIDI DATA	MIDI VALUE
A more distinct undulation effect than FLANGER. Ideal for electric piano type sounds.	• WET	0 – 99	←	1
	• DEPTH	0 – 99	←	2
	• LFO SPEED	0 – 40.2Hz	*3	3
	• RESONANCE	–99 – +99	←	4
	►MANUAL	0 – 99	←	5
	PHASE	0 – 180degree	←	6
	LFO WAVEFORM	sin,tri,square	*4	7
	• VOLUME	0 – 99	←	8

WET	:The proportion at which the original sound and the effect-altered sound are mixed.
DEPTH	:Depth of the effect.
LFO SPEED	:Transmission frequency of the LFO (low frequency oscillator)modulator.
RESONANCE	:Feedback volume (inverted when a minus value).
MANUL	:Center frequency to which the effect is applied.
PHASE	:Phase difference between left and right modulation.
LFO WAVEFORM	:Waveform of the LFO(low frequency oscillator)modulator.
VOLUME	:Volume of the sound to the effect is applied.

ENSEMBLE

EFFECT No.; 6

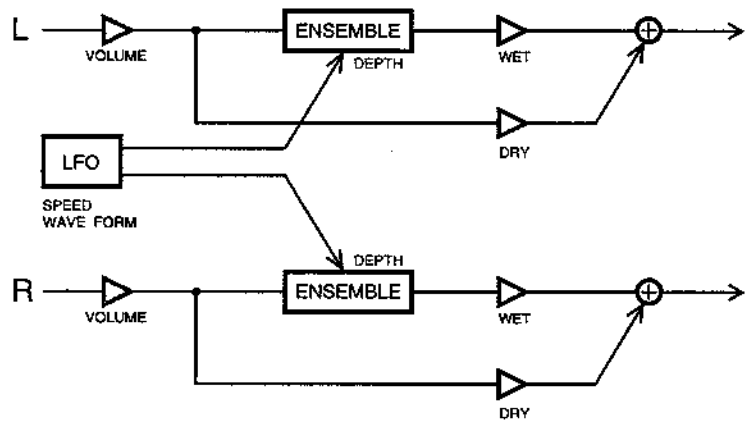

			MIDI DATA	MIDI VALUE
Produces the effect of many musical instruments being played together.	• WET	0 – 99	←	1
	DEPTH	0 – 99	←	2
	►LFO SPEED	0 – 40.2Hz	*3	3
	LFO WAVEFORM	sin,tri,square	*4	4
	• VOLUME	0 – 99	←	5

WET	:The proportion at which the original sound and the effect-altered sound are mixed.
DEPTH	:Depth of the effect.
LFO SPEED	:Transmission frequency of the LFO (low frequency oscillator)modulator.
LFO WAVEFORM	:Waveform of the LFO(low frequency oscillator)modulator.
VOLUME	:Volume of the sound to the effect is applied.

(• : Parameter which can be assigned to DYNAMIC CONTROL, ►: default)
(*1～*18 : Refer to page33)

DSP EFFECT

GATED REVERB

EFFECT No.; 8

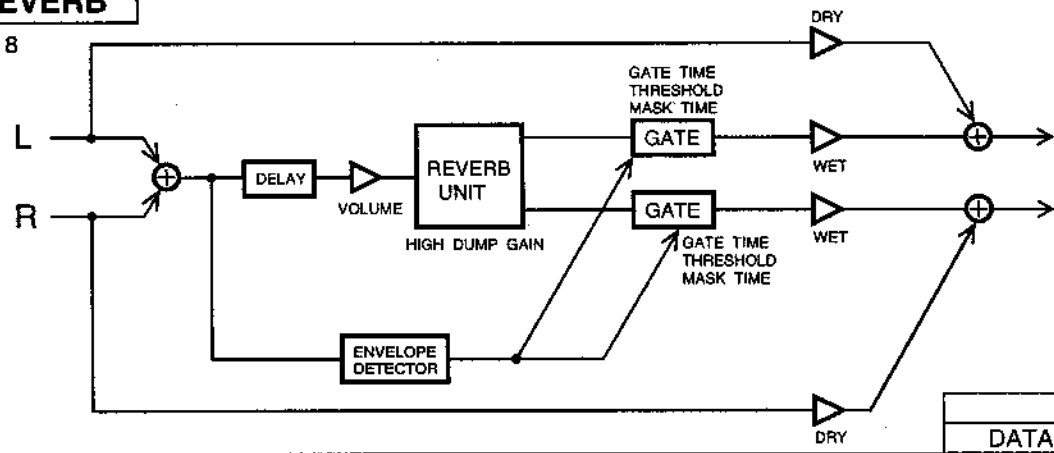

			MIDI DATA	MIDI VALUE
Reverberation is applied for a limited time. An interesting effect can be obtained by muting a reverberation in the middle.	• WET	0 – 99	←	1
	▶ GATE TIME	10 – 2900ms	＊5	2
	HIGH DUMP GAIN	–24 – 0 dB	＊2	3
	• THRESHOLD	0 – 99	←	4
	• MASK TIME	10 – 2900ms	＊5	5
	• VOLUME	0 – 99	←	6

WET	:The proportion at which the original sound and the effect-altered sound are mixed.
GATE TIME	:The time period during which the effect is applied.
HIGH DUMP GAIN	:Adjusts the degree of dumping in the treble range.
THRESHOLD	:The boundary point at which the effect is applied.
MASK TIME	:The time period during the effect is masked.
VOLUME	:Volume of the sound to the effect is applied.

SINGLE DELAY

EFFECT No.; 9

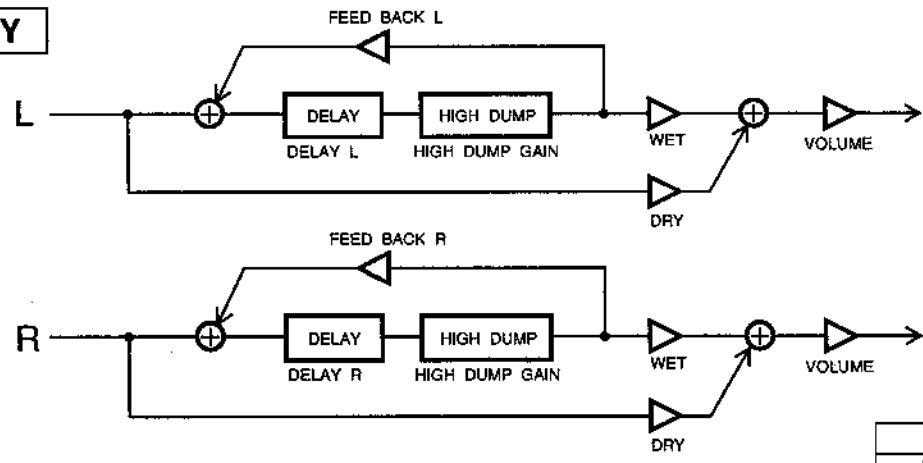

			MIDI DATA	MIDI VALUE
An echo effect, in which the original sound is repeated after a delay.	• WET	0 – 99	←	1
	DELAY L	0 – 350ms	←	2,3
	DELAY R	0 – 350ms	←	4,5
	• FEEDBACK L	–99 – +99	←	6
	• FEEDBACK R	–99 – +99	←	7
	HIGH DUMP GAIN	–24 – 0dB	＊2	8
	▶ VOLUME	0 – 99	←	9

WET	:The proportion at which the original sound and the effect-altered sound are mixed.
DELAY	:Time difference between original sound and the repeat(ms).
FEEDBACK	:Feedback volume (inverted when a minus level).
HIGH DUMP GAIN	:Adjusts the degree of dumping in the treble range.
VOLUME	:Adjusts the volume of the sound to which the effect is applied.

(• : Parameter which can be assigned to DYNAMIC CONTROL, ▶: default)

(＊1～＊18 : Refer to page33)

DSP EFFECT

MULTI TAP DELAY

EFFECT No.; 10

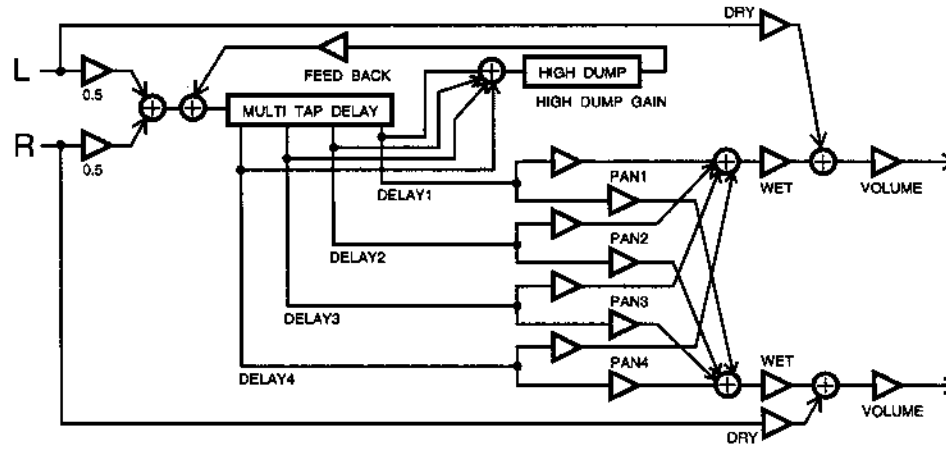

			MIDI DATA	MIDI VALUE
An echo effect in which the length of the delay can be set to vary depending upon pan position.	• WET	0 – 99	←	1
	DELAY 1	0 – 700ms	←	2,3
	DELAY 2	0 – 700ms	←	4,5
	DELAY 3	0 – 700ms	←	6,7
	DELAY 4	0 – 700ms	←	8,9
	• PAN 1	0 – 99	←	10
	• PAN 2	0 – 99	←	11
	• PAN 3	0 – 99	←	12
	• PAN 4	0 – 99	←	13
	►FEED BACK	–99 – +99	←	14
	HIGH DUMP GAIN	–24 – 0dB	*2	15
	• VOLUME	0 – 99	←	16

WET	:The proportion at which the original sound and the effect-altered sound are mixed.
DELAY	:Time difference between original sound and the repeat(ms).
PAN	:Panning setting.
FEEDBACK	:Feedback volume (inverted when a minus level).
HIGH DUMP GAIN	:Adjusts the degree of dumping in the treble range.
VOLUME	:Adjusts the volume of the sound to which the effect is applied.

(• : Parameter which can be assigned to DYNAMIC CONTROL, ►: default)
(*1～*18 : Refer to page33)

DSP EFFECT

MANUAL DELAY

EFFECT No.; 11

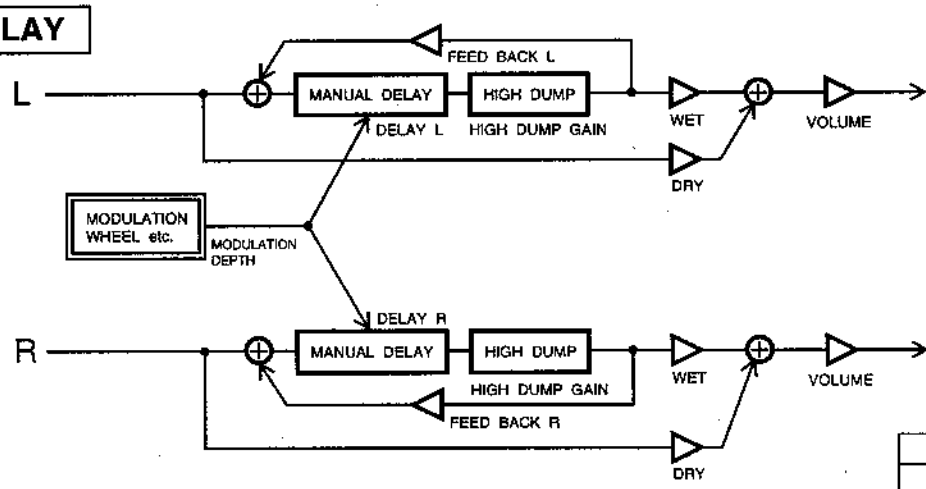

			MIDI DATA	MIDI VALUE
The delay in which the delay time is altered by controller operation.	• WET	0 – 99	←	1
	►MODULATION DEPTH	0 – 99	←	2
	DELAY L	0 – 350ms	←	3,4
	DELAY R	0 – 350ms	←	5,6
	• FEEDBACK L	–99 – +99	←	7
	• FEEDBACK R	–99 – +99	←	8
	HIGH DUMP GAIN	–24 – 0dB	*2	9
	• VOLUME	0 – 99	←	10

WET	:The proportion at which the original sound and the effect-altered sound are mixed.
MODULATION DEPTH	:Depth of the modulation modified by the controller.
DELAY	:Time difference between original sound and the repeat(ms).
FEEDBACK	:Feedback volume (inverted when a minus level).
HIGH DUMP GAIN	:Adjusts the degree of dumping in the treble range.
VOLUME	:Adjusts the volume of the sound to which the effect is applied.

DISTORTION

EFFECT No.; 32

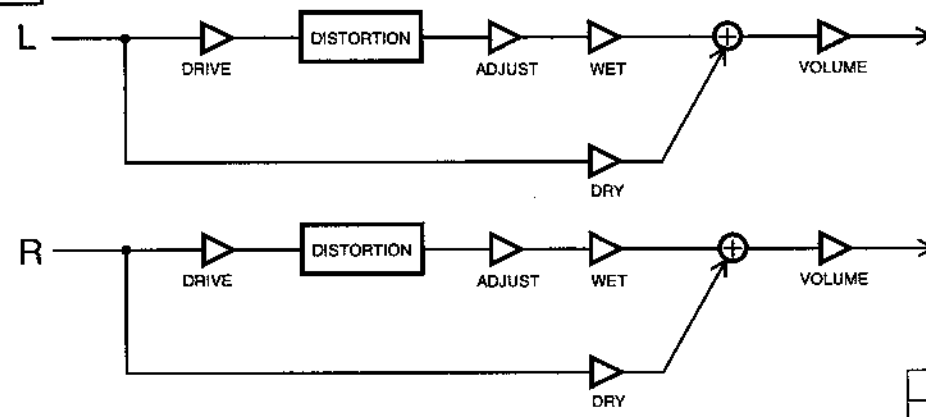

			MIDI DATA	MIDI VALUE
The sound is very distorted. A powerful effect when applied to a sound which is played solo.	• WET	0 – 99	←	1
	► DRIVE	0 – 99	←	2
	• ADJUST	0 – 99	←	3
	• VOLUME	0 – 99	←	4

WET	:The proportion at which the original sound and the effect-altered sound are mixed.
DRIVE	:Degree of distortion.
ADJUST	:The manner in which the effect is applied.
VOLUME	:Volume of the soud to the effect is applied.

(• : Parameter which can be assigned to DYNAMIC CONTROL, ►: default)
(*1～*18 : Refer to page33)

DSP EFFECT

OVERDRIVE

EFFECT No.; 33

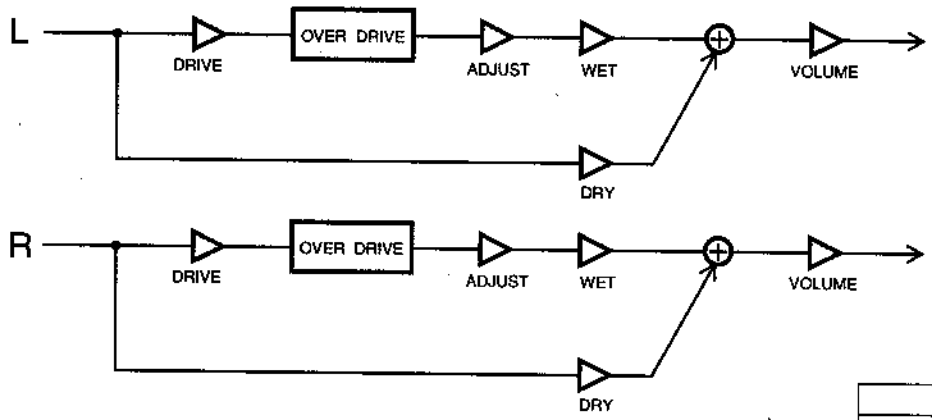

			MIDI DATA	MIDI VALUE
A more natural distortion than the above effect,similar to that achieved with a vacuum tube amplifier.	• WET	0 – 99	←	1
	► DRIVE	0 – 99	←	2
	• ADJUST	0 – 99	←	3
	• VOLUME	0 – 99	←	4

WET : The proportion at which the original sound and the effect-altered sound are mixed.
DRIVE : Degree of distortion.
ADJUST : The manner in which the effect is applied.
VOLUME : Volume of the sound to the effect is applied.

FUZZ

EFFECT No.; 34

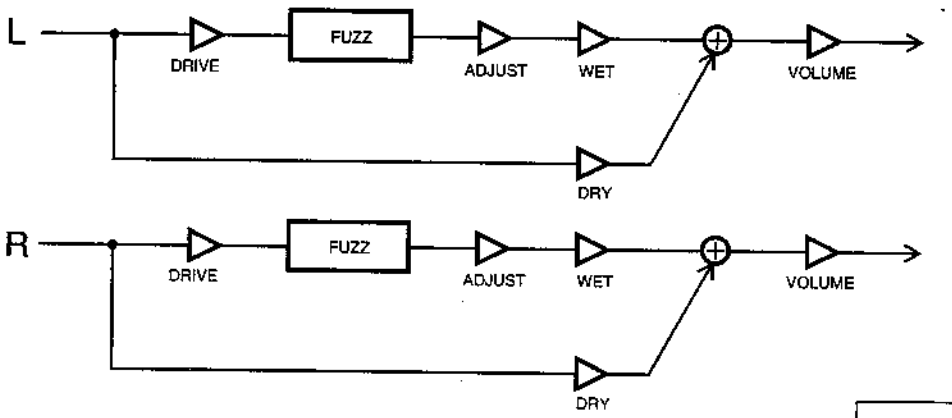

			MIDI DATA	MIDI VALUE
Powerful distortion effect ideal for electric guitar type sounds.	• WET	0 – 99	←	1
	► DRIVE	0 – 99	←	2
	• ADJUST	0 – 99	←	3
	• VOLUME	0 – 99	←	4

WET : The proportion at which the original sound and the effect-altered sound are mixed.
DRIVE : Degree of distortion.
ADJUST : The manner in which the effect is applied.
VOLUME : Volume of the sound to the effect is applied.

(• : Parameter which can be assigned to DYNAMIC CONTROL, ►: default)
(＊1～＊18 : Refer to page33)

DSP EFFECT

EXCITER

EFFECT No.; 35

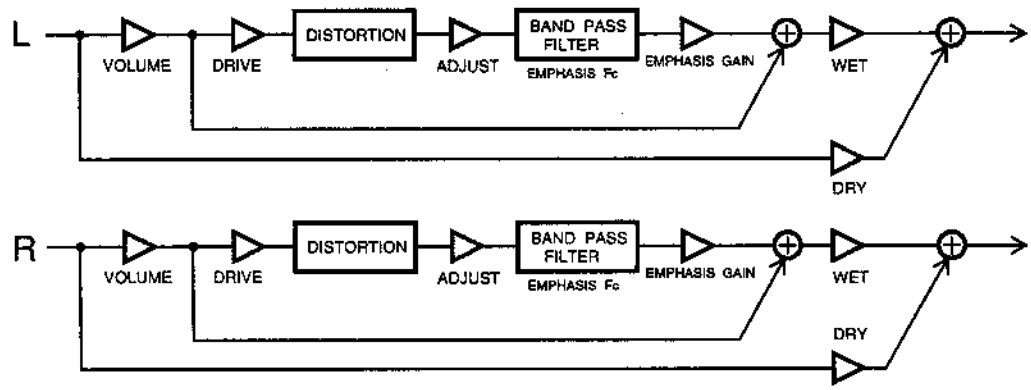

			MIDI DATA	MIDI VALUE
Modulates sounds, clarifies sound profile, and projects sound forward.	• WET	0 – 99	←	1
	▶DRIVE	0 – 99	←	2
	• ADJUST	0 – 99	←	3
	EMPHASIS Fc	50Hz – 16 kHz	＊6, ＊18	4,5
	• EMPHASIS GAIN	0 – 99	←	6
	• VOLUME	0 – 99	←	7

WET	: The proportion at which the original sound and the effect-altered sound are mixed.
DRIVE	: Degree of distortion.
ADJUST	: The manner in which the effect is applied.
EMPHASIS Fc	: The frequency of the emphasis.
EMPHASIS GAIN	: The volume of the emphasis.
VOLUME	: Volume of the sound to the effect is applied.

COMPRESSOR

EFFECT No.; 36

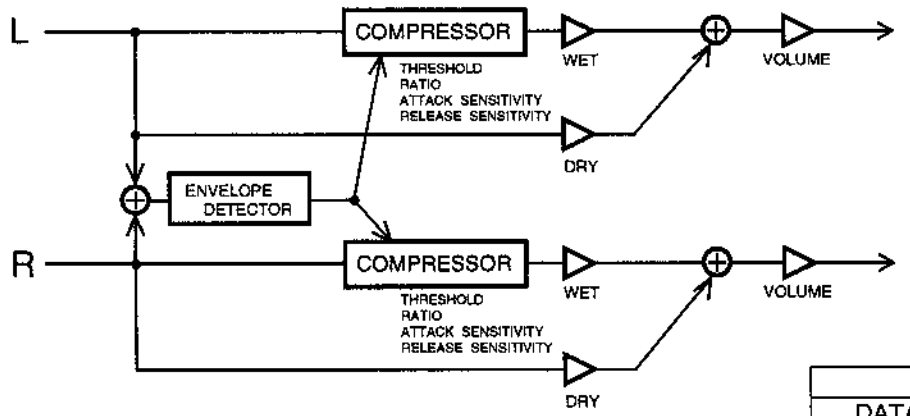

			MIDI DATA	MIDI VALUE
Compresses the dynamic range.	• WET	0 – 99	←	1
	THRESHOLD	0 – 99	←	2
	RATIO	0 – 99	←	3
	▶ATTACK SENSITIVITY	0.001 – 0.5 s	＊9	4
	• RELEASE SENSITIVITY	0.001 – 0.5 s	＊9	5
	• VOLUME	0 – 99	←	6

WET	: The proportion at which the original sound and the effect-altered sound are mixed.
THRESHOLD	: The boundary point at which the effect is applied.
RATIO	: The ratio of the effect.
ATTACK SENSITIVITY	: Sensitivity of the effect at the time of attack (reaction speed).
RELEASE SENSITIVITY	: Sensitivity of the effect at the time of release (reaction speed).
VOLUME	: Volume of the sound to the effect is applied.

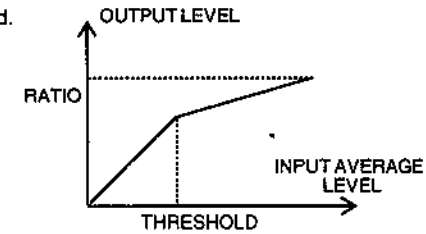

(• : Parameter which can be assigned to DYNAMIC CONTROL, ▶: default)
(＊1～＊18 : Refer to page33)

DSP EFFECT

SLOW ATTACKER

EFFECT No.; 37

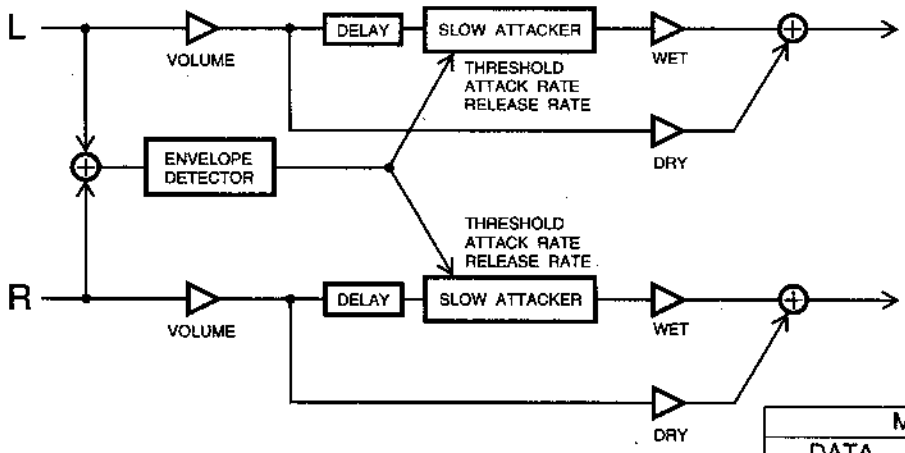

			MIDI DATA	MIDI VALUE
Slows down the attack.	• WET	0 – 99	←	1
	• THRESHOLD	0 – 99	←	2
	► ATTACK RATE	0.2 – 20.0 s	＊10	3
	• RELEASE RATE	0.01 – 1.0 s	＊10	4
	• VOLUME	0 – 99	←	5

WET : The proportion at which the original sound and the effect-altered sound are mixed.
THRESHOLD : The boundary point at which the effect is applied.
ATTACK RATE : Attack rate (slope).
RELEASE RATE : Release rate (slope).
VOLUME : Volume of the sound to the effect is applied.

NOISE GENERATOR

EFFECT No.; 38

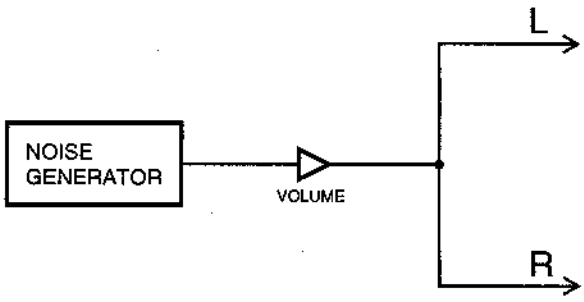

			MIDI DATA	MIDI VALUE
Noise is generated.	► VOLUME	0 – 99	←	1

VOLUME : Volume of the sound to the effect is applied.

(• : Parameter which can be assigned to DYNAMIC CONTROL, ►: default)
(＊1～＊18 : Refer to page33)

DSP EFFECT

PARAMETRIC EQ

EFFECT No.; 39

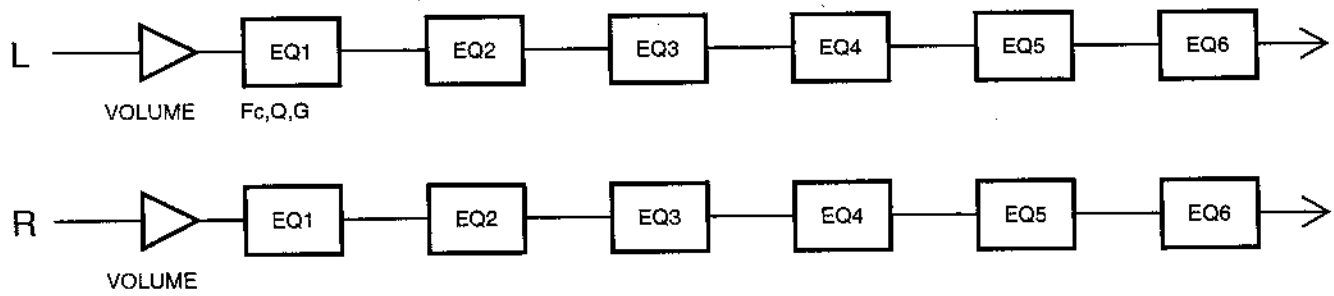

					MIDI DATA	MIDI VALUE
An equalizer which sets sound quality for a precise frequency point.	BAND EMPHASIS 1 Fc	50 Hz	–	16 kHz	*6	
	BAND EMPHASIS 1 Q	0.1	–	20	*7	1,2
	BAND EMPHASIS 1 G	–12	–	+12 dB	*8	*17
	BAND EMPHASIS 2 Fc	50 Hz	–	16 kHz	*6	
	BAND EMPHASIS 2 Q	0.1	–	20	*7	3,4
	BAND EMPHASIS 2 G	–12	–	+12 dB	*8	*17
	BAND EMPHASIS 3 Fc	50 Hz	–	16 kHz	*6	
	BAND EMPHASIS 3 Q	0.1	–	20	*7	5,6
	BAND EMPHASIS 3 G	–12	–	+12 dB	*8	*17
	BAND EMPHASIS 4 Fc	50 Hz	–	16 kHz	*6	
	BAND EMPHASIS 4 Q	0.1	–	20	*7	7,8
	BAND EMPHASIS 4 G	–12	–	+12 dB	*8	*17
	BAND EMPHASIS 5 Fc	50 Hz	–	16 kHz	*6	
	BAND EMPHASIS 5 Q	0.1	–	20	*7	9,10
	BAND EMPHASIS 5 G	–12	–	+12 dB	*8	*17
	BAND EMPHASIS 6 Fc	50 Hz	–	16kHz	*6	
	BAND EMPHASIS 6 Q	0.1	–	20	*7	11,12
	BAND EMPHASIS 6 G	–12	–	+12dB	*8	*17
	► VOLUME	0	–	99	←	13

BAND EMPHASIS Fc : Center frequency of the modified band.
BAND EMPHASIS Q : Sharpness of the curve of the frequency characteristic of the modified band.
BAND EMPHASIS G : Volume of emphasis/dumping in the modified band.
VOLUME :Volume of the sound to the effect is applied.

(• : Parameter which can be assigned to DYNAMIC CONTROL, ►: default)
(*1~*18 : Refer to page33)

DSP EFFECT

AUTO PAN

EFFECT No.; 48

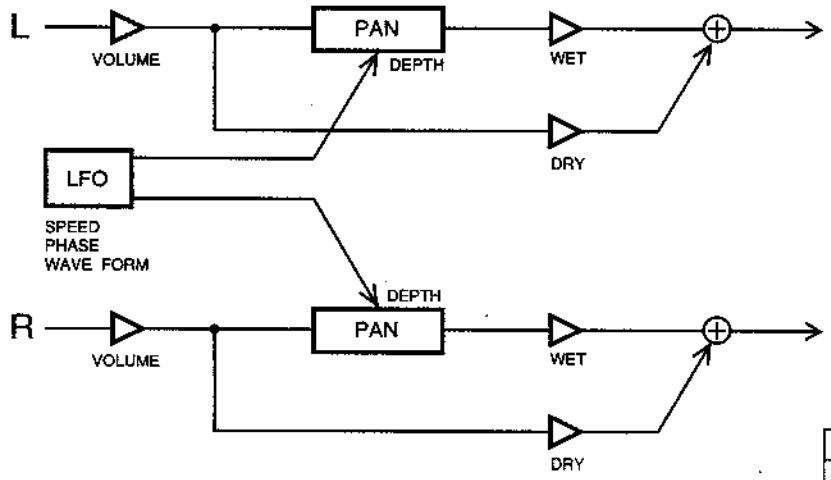

			MIDI DATA	MIDI VALUE
Periodically shifts the sound's pan position.	• WET	0 – 99	←	1
	• DEPTH	0 – 99	←	2
	► LFO SPEED	0 – 40.2 Hz	*3	3
	PHASE	0 – 180 degree	←	4
	LFO WAVEFORM	sin,tri,square	*4	5
	• VOLUME	0 – 99	←	6

WET : The proportion at which the original sound and the effect-altered sound are mixed.
DEPTH : Depth of the effect.
LFO SPEED : Transmission frequency of the LFO (low frequency oscillator) modulator.
PHASE : Phase difference between left and right modulation.
LFO WAVEFORM : Waveform of the LFO (low frequency oscillator) modulator.
VOLUME : Volume of the sound to the effect is applied.

PITCH SHIFTER

EFFECT No.; 49

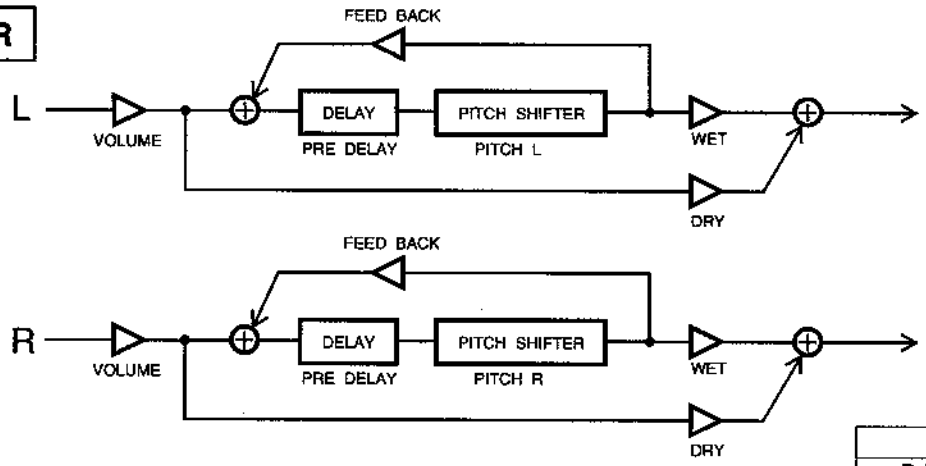

			MIDI DATA	MIDI VALUE
The pitch of the input signal is altered.	• WET	0 – 99	←	1
	• PITCH L	–1200 –+1200	*14	2
	• PITCH R	–1200 –+1200	*14	3
	PRE DELAY	0 – 200ms	←	4
	► FEEDBACK	–99 – +99	←	5
	• VOLUME	0 – 99	←	6

WET : The proportion at which the original sound and the effect-altered sound are mixed.
PRE DELAY : The time elapsed between the beginning of the reverb effect.
FEEDBACK : Feedback volume (inverted when a minus level).
VOLUME : Volume of the sound to the effect is applied.

(• : Parameter which can be assigned to DYNAMIC CONTROL, ►: default)
(*1~*18 : Refer to page33)

DSP EFFECT

VIBRATO

EFFECT No.; 50

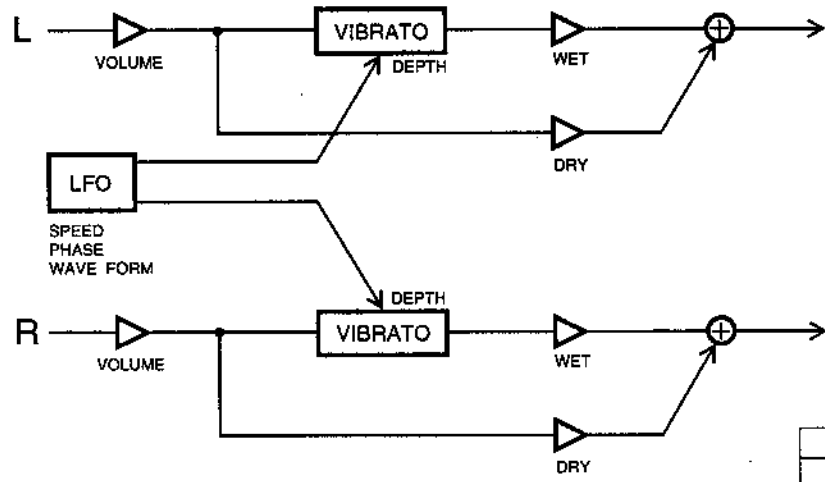

			MIDI DATA	MIDI VALUE
Modulates frequency in a vibrato pattern.	• WET	0 – 99	←	1
	• DEPTH	0 – 99	←	2
	▶ LFO SPEED	0 – 40.2 Hz	*3	3
	PHASE	0 – 180 degree	←	4
	LFO WAVEFORM	sin,tri,square	*4	5
	• VOLUME	0 – 99	←	6

WET	: The proportion at which the original sound and the effect-altered sound are mixed.
DEPTH	: Depth of the effect.
LFO SPEED	: Transmission frequency of the LFO (low frequency oscillator) modulator.
PHASE	: Phase difference between left and right modulation.
LFO WAVEFORM	: Waveform of the LFO (low frequency oscillator) modulator.
VOLUME	: Volume of the sound to the effect is applied.

PEDAL WAH

EFFECT No.; 51

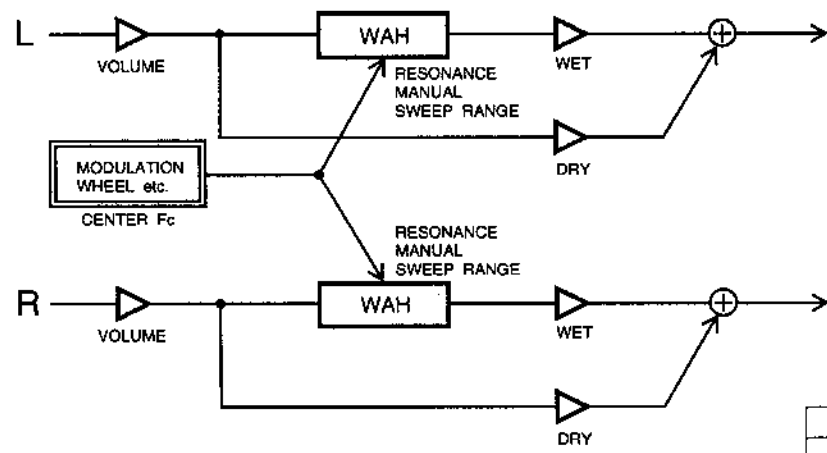

			MIDI DATA	MIDI VALUE
The effect which alters the peak frequency of the filter by operation of a controller, such as a control pedal etc.	• WET	0 – 99	←	1
	RESONANCE	wide,middle,narrow	*15	2
	MANUAL	0 – 99	←	3
	SWEEP RANGE	0 – 99	←	4
	▶ WAH CENTER Fc	0 – 99	←	5
	• VOLUME	0 – 99	←	6

WET	: The proportion at which the original sound and the effect-altered sound are mixed.
RESONANCE	: Feed back type.
MANUAL	: Center frequency to which the effect is applied.
SWEEP RANGE	: The range of frequencies to be changed.
WAH CENTER Fc	: The frequency which becomes the altered center.
VOLUME	: Volume of the sound to the effect is applied.

(• : Parameter which can be assigned to DYNAMIC CONTROL, ▶: default)
(*1～*18 : Refer to page33)

DSP EFFECT

AUTO WAH

EFFECT No.; 52

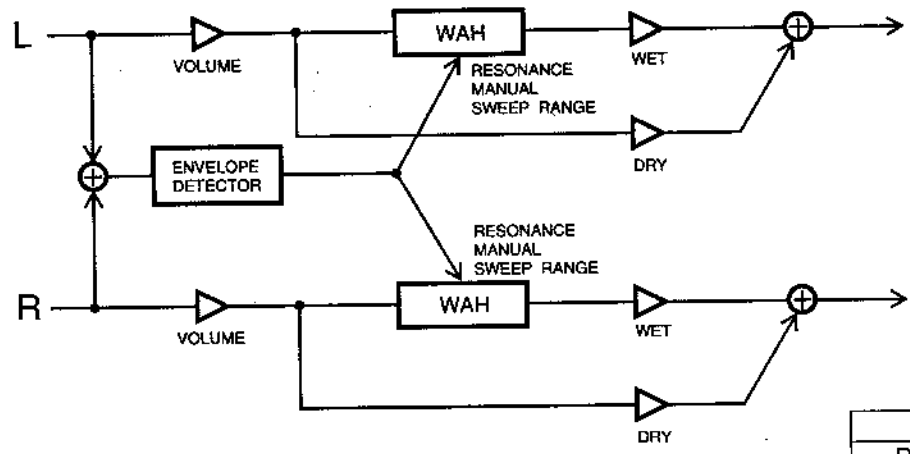

			MIDI DATA	MIDI VALUE
A filter effect which automatically changes peak frequency in response to an increase in the volume of the input.	►WET	0 – 99	←	1
	RESONANCE	wide,middle,narrow	＊15	2
	MANUAL	0 – 99	←	3
	SWEEP RANGE	0 – 99	←	4
	• VOLUME	0 – 99	←	5

WET	: The proportion at which the original sound and the effect-altered sound are mixed.
RESONANCE	: Feed back type.
MANUAL	: Center frequency to which the effect is applied.
SWEEP RANGE	: The range of frequencies to be changed.
VOLUME	: Volume of the sound to the effect is applied.

(• : Parameter which can be assigned to DYNAMIC CONTROL, ►: default)

(＊1～＊18 : Refer to page33)

DSP EFFECT

ROTARY SPEAKER

EFFECT No.; 53

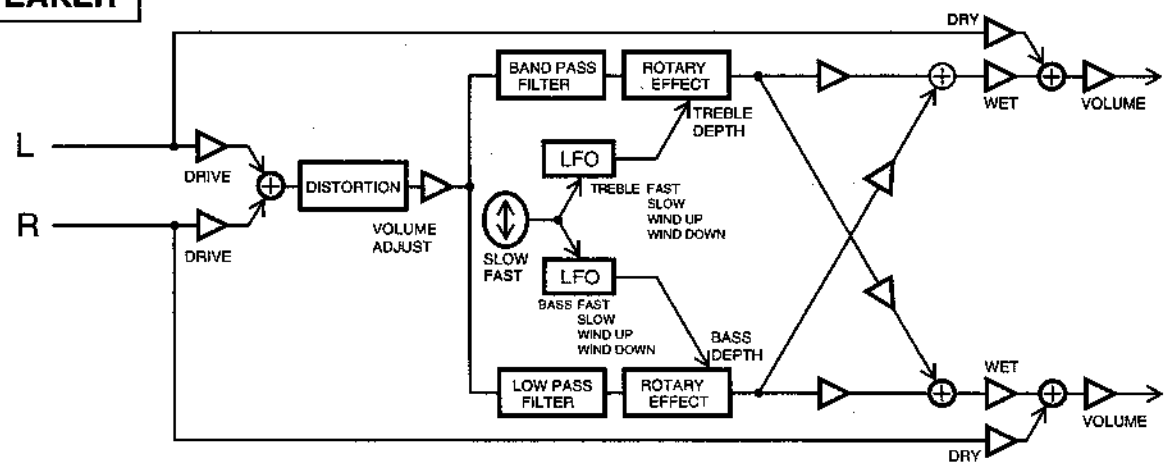

			MIDI DATA	MIDI VALUE
Produces sounds that seem to be emitted from rotary speakers. Ideal for organ type sounds.	• WET	0 – 99	←	1
	• DRIVE	0 – 99	←	2
	• VOLUME ADJUST	0 – 99	←	3
	• TREBLE DEPTH	0 – 99	←	4
	FAST	0 – 34.95 Hz	*11	5
	SLOW	0 – 34.95 Hz	*11	6
	WIND UP	1.0 – 61.0 s	*12	7
	WIND DOWN	1.0 – 61.0 s	*12	8
	• BASS DEPTH	0 – 99	←	9
	FAST	0 – 34.95 Hz	*11	10
	SLOW	0 – 34.95 Hz	*11	11
	WIND UP	1.0 – 61.0 s	*12	12
	WIND DOWN	1.0 – 61.0 s	*12	13
	• VOLUME	0 – 99	←	14
	► SLOW/FAST	slow, fast	*16	15

WET	: The proportion at which the original sound and the effect-altered sound are mixed.
DRIVE	:Degree of distortion.
WIND UP	: The time it takes to reach the (TREBLE/BASS) FAST speed when the speed is changed from slow to fast.
WIND DOWN	: The time it takes to reach the (TREBLE/BASS) SLOW speed when the speed is changed from fast to slow.
VOLUME	: Volume of the sound to the effect is applied.
SLOW/FAST	: Switches speaker rotation speed between SLOW and FAST.

(• : Parameter which can be assigned to DYNAMIC CONTROL, ►: default)
(*1～*18 : Refer to page33)

DSP EFFECT

RING MODULATOR

EFFECT No.; 54

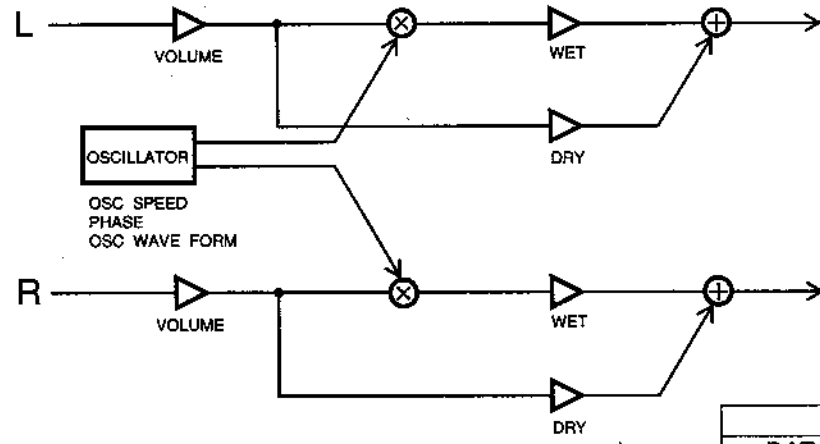

			MIDI DATA	MIDI VALUE
Produces a metallic sound. Tends to sound off key.	• WET	0 – 99	←	1
	► OSC SPEED	0 – 19.6 kHz	＊13	2
	PHASE	0 – 180 degree	←	3
	OSC WAVEFORM	sin,tri,square	＊4	4
	• VOLUME	0 – 99	←	5

WET : The proportion at which the original sound and the effect-altered sound are mixed.
OSC SPEED : Oscillator frequency.
PHASE : Phase difference between left and right modulation.
OSC WAVEFORM : Oscillator waveform.
VOLUME : Volume of the sound to the effect is applied.

HAAS EFFECT

EFFECT No.; 55

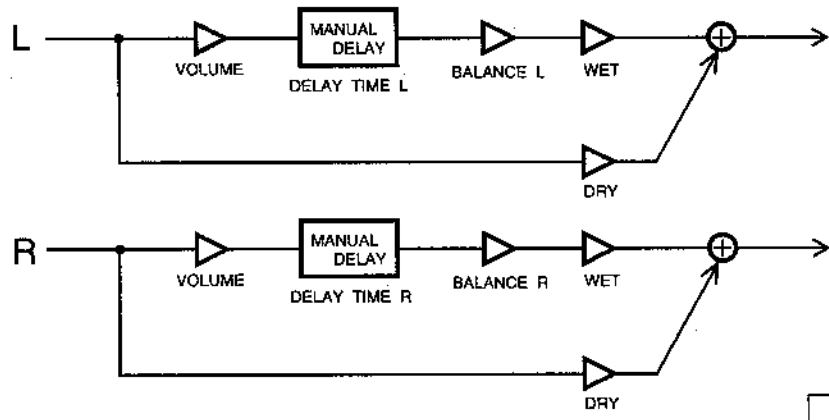

			MIDI DATA	MIDI VALUE
The effect by which the sound is perceived to incline to the left or right by the difference in the time it takes to reach the ears.	• WET	0 – 99	←	1
	► DELAY TIME L	0 – 350ms	←	2,3
	• DELAY TIME R	0 – 350ms	←	4,5
	• BALANCE L	0 – 99	←	6
	• BALANCE R	0 – 99	←	7
	• VOLUME	0 – 99	←	8

WET :The proportion at which the original sound and the effect-altered sound are mixed.
DELAY TIME :Delay time.
VOLUME :Volume of the sound to the effect is applied.

(• : Parameter which can be assigned to DYNAMIC CONTROL, ►: default)
(＊1～＊18 : Refer to page33)

DSP EFFECT

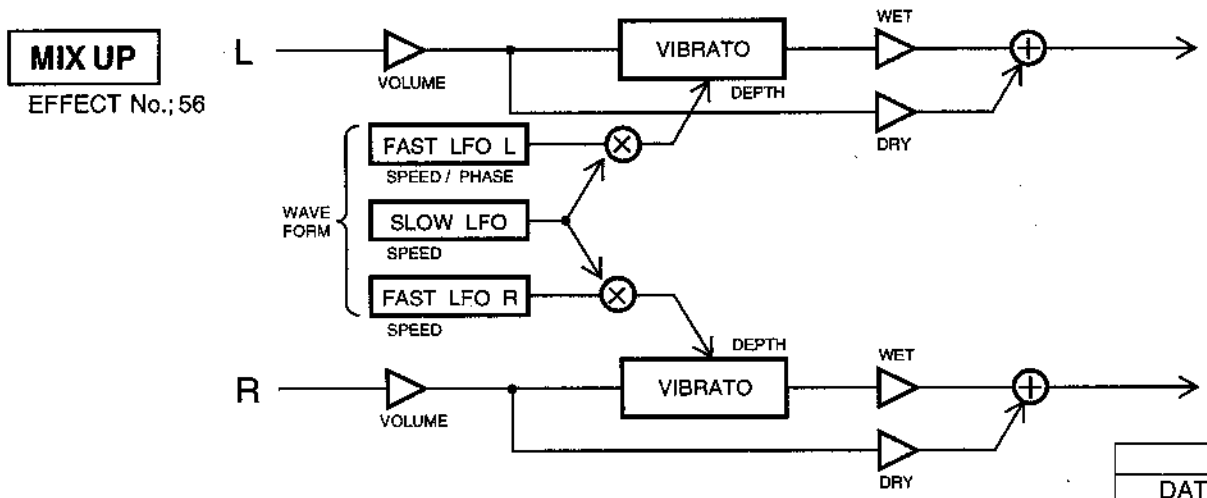

			MIDI DATA	MIDI VALUE
Mixes in LFO modulation.	• WET	0 – 99	←	1
	• DEPTH	0 – 99	←	2
	► SLOW LFO SPEED	0 – 40.2 Hz	*3	3
	• FAST LFO SPEED L	0 – 40.2 Hz	*3	4
	• FAST LFO SPEED R	0 – 40.2 Hz	*3	5
	PHASE	0 – 180 degree	←	6
	LFO WAVEFORM	sin,tri,square	*4	7
	• VOLUME	0 – 99	←	8

WET	: The proportion at which the original sound and the effect-altered sound are mixed.
DEPTH	: Depth of effect.
LFO SPEED	: Transmission frequency of the LFO (low frequency oscillator) modulator.
PHASE	: Phase difference between left and right modulation.
LFO WAVEFORM	: Wave form of the LFO(low frequency oscillator) modulator.
VOLUME	: Volume of the sound to the effect is applied.

(• : Parameter which can be assigned to DYNAMIC CONTROL, ►: default)
(*1～*18 : Refer to page33)

DSP EFFECT

SINGLE DELAY + CHORUS

EFFECT No.; 64

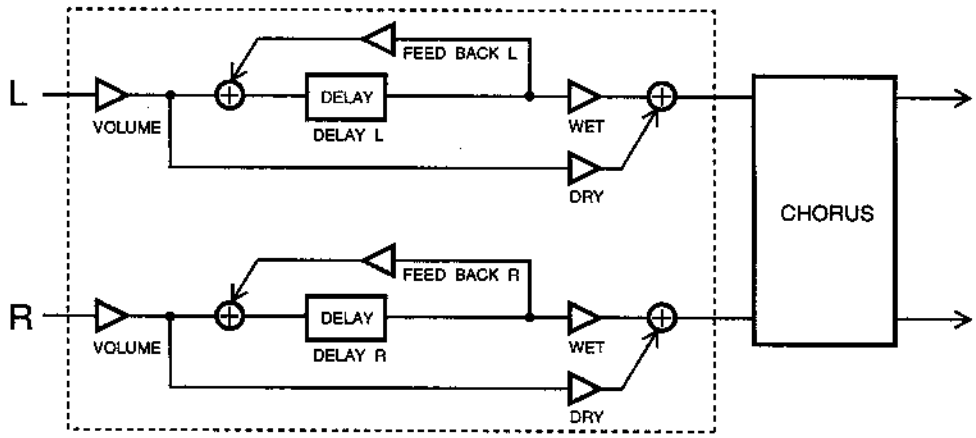

SINGLE DELAY※

				MIDI DATA	MIDI VALUE
Combines delay with chorus.	• DELAY WET	0 – 99		←	1
	DELAY L	0 – 300 ms		←	2,3
	DELAY R	0 – 300 ms		←	4,5
	• FEEDBACK L	–99 – +99		←	6
	• FEEDBACK R	–99 – +99		←	7
	• CHORUS DRY/WET	0 – 99		←	8
	• DEPTH	0 – 99		←	9
	► LFO SPEED	0 – 40.2 Hz		*3	10
	LFO WAVEFORM	sin,tri,square		*4	11
	• VOLUME	0 – 99		←	12

DRY/WET	: The proportion at which the original sound and the effect-altered sound are mixed.
DELAY	: Time difference between original sound and the repeat (ms).
FEEDBACK	: Feedback volume (inverted when a minus level).
DEPTH	: Depth of the effect.
LFO SPEED	: Transmission frequency of the LFO (low frequency oscillator) modulator.
LFO WAVEFORM	: Waveform of the LFO (low frequency oscillator) modulator.
VOLUME	: Volume of the sound to the effect is applied.

(• : Parameter which can be assigned to DYNAMIC CONTROL, ►: default)
(*1～*18 : Refer to page33)

DSP EFFECT

SINGLE DELAY + SINGLE DELAY

EFFECT No.; 65

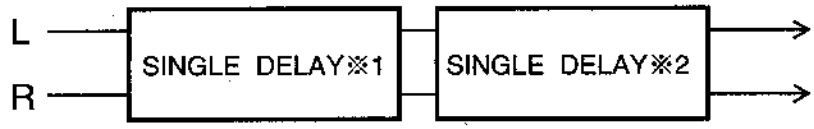

Combines two types of delay.

			MIDI DATA	MIDI VALUE
	• DELAY 1 WET	0 – 99	←	1
	DELAY L	0 – 180 ms	←	2
	DELAY R	0 – 180 ms	←	3
	• FEEDBACK L	–99 – +99	←	4
	• FEEDBACK R	–99 – +99	←	5
	▶ DELAY 2 DRY/WET	0 – 99	←	6
	DELAY L	0 – 180 ms	←	7
	DELAY R	0 – 180 ms	←	8
	• FEEDBACK L	–99 – +99	←	9
	• FEEDBACK R	–99 – +99	←	10
	• VOLUME	0 – 99	←	11

DRY/WET : The proportion at which the original sound and the effect-altered sound are mixed.
DELAY : Time difference between original sound and the repeat (ms).
FEEDBACK : Feedback volume (inverted when a minus level).
VOLUME : Volume of the sound to the effect is applied.

SINGLE DELAY + FLANGER

EFFECT No.; 66

Combines delay with flanger.

			MIDI DATA	MIDI VALUE
	• DELAY WET	0 – 99	←	1
	DELAY L	0 – 300 ms	←	2,3
	DELAY R	0 – 300 ms	←	4,5
	• FEEDBACK L	–99 – +99	←	6
	• FEEDBACK R	–99 – +99	←	7
	• FLANGER DRY/WET	0 – 99	←	8
	• DEPTH	0 – 99	←	9
	• LFO SPEED	0 – 40.2 Hz	*3	10
	▶ RESONANCE	–99 – +99	←	11
	MANUAL	0 – 99	←	12
	PHASE	0 – 180 degree	←	13
	LFO WAVEFORM	sin,tri,square	*4	14
	• VOLUME	0 – 99	←	15

DRY/WET : The proportion at which the original sound and the effect-altered sound are mixed.
DELAY : Time difference between original sound and the repeat (ms).
FEEDBACK : Feedback volume (inverted when a minus level).
DEPTH : Depth of the effect.
LFO SPEED : Transmission frequency of the LFO (low frequency oscillator) modulator.
RESONANCE : Feedback type.
MANUAL : Center frequency to which the effect is applied.
PHASE : Phase difference between left and right modulation.
LFO WAVEFORM : Waveform of the LFO (low frequency oscillator) modulator.
VOLUME : Volume of the sound to the effect is applied.

(• : Parameter which can be assigned to DYNAMIC CONTROL, ▶: default)
(*1～*18 : Refer to page33)

DSP EFFECT

SINGLE DELAY + VIBRATO

EFFECT No.; 67

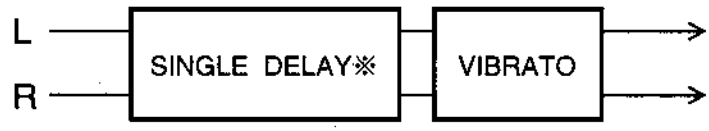

			MIDI DATA	MIDI VALUE
Combines delay with vibrato.	• DELAY WET	0 – 99	←	1
	DELAY L	0 – 300 ms	←	2,3
	DELAY R	0 – 300 ms	←	4,5
	• FEEDBACK L	–99 – +99	←	6
	• FEEDBACK R	–99 – +99	←	7
	• VIBRATO DRY/WET	0 – 99	←	8
	• DEPTH	0 – 99	←	9
	►LFO SPEED	0 – 40.2Hz	*3	10
	PHASE	0 – 180 degree	←	11
	LFO WAVEFORM	sin,tri,square	*4	12
	• VOLUME	0 – 99	←	13

DRY/WET	: The proportion at which the original sound and the effect-altered sound are mixed.
DELAY	: Time difference between original sound and the repeat (ms).
FEEDBACK	: Feedback volume (inverted when a minus level).
DEPTH	: Depth of the effect.
LFO SPEED	: Transmission frequency of the LFO (low frequency oscillator) modulator.
PHASE	: Phase difference between left and right modulation.
LFO WAVEFORM	: Waveform of the LFO (low frequency oscillator) modulator.
VOLUME	: Volume of the sound to the effect is appiled.

SINGLE DELAY + PHASER

EFFECT No.; 68

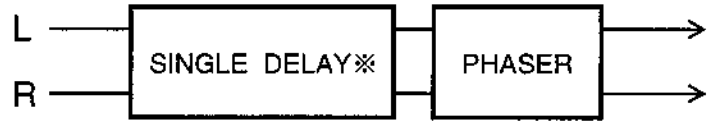

			MIDI DATA	MIDI VALUE
Combines delay with phaser.	• DELAY WET	0 – 99	←	1
	DELAY L	0 – 300 ms	←	2,3
	DELAY R	0 – 300 ms	←	4,5
	• FEEDBACK L	–99 – +99	←	6
	• FEEDBACK R	–99 – +99	←	7
	• PHASER DRY/WET	0 – 99	←	8
	• DEPTH	0 – 99	←	9
	• LFO SPEED	0 – 40.2 Hz	*3	10
	• RESONANCE	–99 – +99	←	11
	►MANUAL	0 – 99	←	12
	PHASE	0 – 180 degree	←	13
	LFO WAVEFORM	sin,tri,square	*4	14
	• VOLUME	0 – 99	←	15

DRY/WET	: The proportion at which the original sound and the effect-altered sound are mixed.
DELAY	: Time difference between original sound and the repeat (ms).
FEEDBACK	: Feedback volume (inverted when a minus level).
DEPTH	: Depth of the effect.
LFO SPEED	: Transmission frequency of the LFO (low frequency oscillator) modulator.
RESONANCE	: Feedback type.
MANUAL	: Center frequency to which the effect is applied.
PHASE	: Phase difference between left and right modulation.
LFO WAVEFORM	: Waveform of the LFO (low frequency oscillator) modulator.
VOLUME	: Volume of the sound to the effect is applied.

(• : Parameter which can be assigned to DYNAMIC CONTROL, ►: default)

(*1～*18 : Refer to page33)

DSP EFFECT

PEDAL WAH + SINGLE DELAY

EFFECT No.; 69

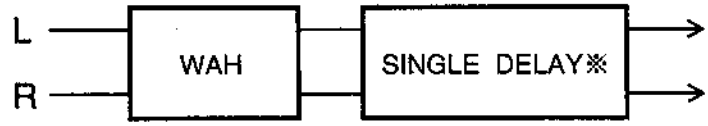

Combines pedal wah with delay.

		MIDI DATA	MIDI VALUE
• WAH WET	0 – 99	←	1
RESONANCE	wide,middle,narrow	＊15	2
MANUAL	0 – 99	←	3
SWEEP RANGE	0 – 99	←	4
▶ WAH CENTER Fc	0 – 99	←	5
• DELAY DRY/WET	0 – 99	←	6
DELAY L	0 – 300ms	←	7,8
DELAY R	0 – 300ms	←	9,10
• FEEDBACK L	–99 – +99	←	11
• FEEDBACK R	–99 – +99	←	12
• VOLUME	0 – 99	←	13

DRY/WET	: The proportion at which the original sound and the effect-altered sound are mixed.
RESONANCE	: Feed back type.
MANUAL	: Center frequency to which the effect is applied.
SWEEP RANGE	: The range of frequencies to be changed.
WAH CENTER Fc	: The frequency which becomes the altered center.
DELAY	: Time difference between original sound and the repeat (ms).
FEEDBACK	: Feedback volume (inverted when a minus level).
VOLUME	: Volume of the sound to the effect is applied.

AUTO WAH + SINGLE DELAY

EFFECT No.; 70

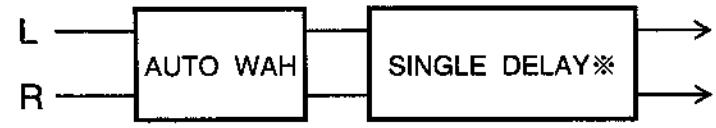

Combines auto wah with delay.

		MIDI DATA	MIDI VALUE
• WAH WET	0 – 99	←	1
RESONANCE	wide,middle,narrow	＊15	2
MANUAL	0 – 99	←	3
SWEEP RANGE	0 – 99	←	4
▶ DELAY DRY/WET	0 – 99	←	5
DELAY L	0 – 300ms	←	6,7
DELAY R	0 – 300ms	←	8,9
• FEEDBACK L	–99 – +99	←	10
• FEEDBACK R	–99 – +99	←	11
• VOLUME	0 – 99	←	12

DRY/WET	: The proportion at which the original sound and the effect-altered sound are mixed.
RESONANCE	: Feed back type.
MANUAL	: Center frequency to which the effect is applied.
SWEEP RANGE	: The range of frequencies to be changed.
DELAY	: Time difference between original sound and the repeat (ms).
FEEDBACK	: Feedback volume (inverted when a minus level).
VOLUME	: Volume of the sound to the effect is applied.

(• : Parameter which can be assigned to DYNAMIC CONTROL, ▶: default)
(＊1～＊18 : Refer to page33)

DSP EFFECT

PEQ + CHORUS

EFFECT No.; 71

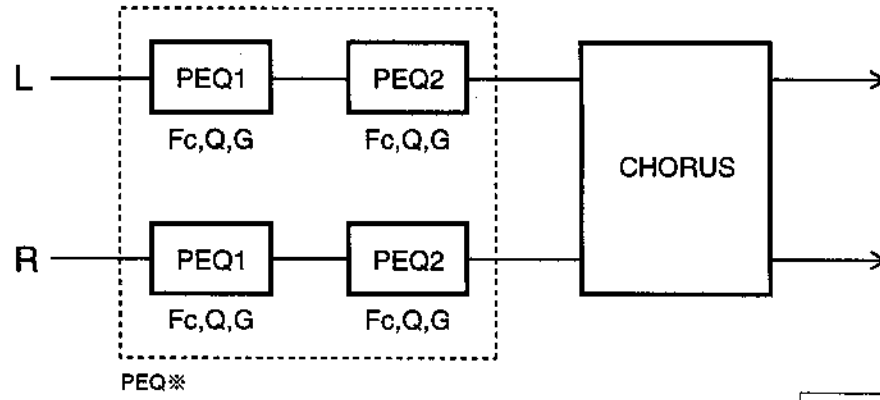

			MIDI DATA	MIDI VALUE
Combines parametric equalizer with chorus.	BAND EMPHASIS 1 Fc	50 Hz – 16kHz	＊6	
	BAND EMPHASIS 1 Q	0.1 – 20	＊7	1,2
	BAND EMPHASIS 1 G	–12 – +12dB	＊8	＊17
	BAND EMPHASIS 2 Fc	50 Hz – 16kHz	＊6	
	BAND EMPHASIS 2 Q	0.1 – 20	＊7	3,4
	BAND EMPHASIS 2 G	–12 – +12dB	＊8	＊17
	• CHORUS DRY/WET	0 – 99	←	5
	• DEPTH	0 – 99	←	6
	► LFO SPEED	0 – 40.2	←	7
	LFO WAVEFORM	sin,tri,square	＊4	8
	• VOLUME	0 – 99	←	9

BAND EMPHASIS Fc	: Center frequency of the modified band.
BAND EMPHASIS Q	: Sharpness of the curve of the frequency characteristic of the modified band.
BAND EMPHASIS G	: Volume of emphasis/dumping in the modified band.
DRY/WET	: The proportion at which the original sound and the effect-altered sound are mixed.
DEPTH	: Depth of the effect.
LFO SPEED	: Transmission frequency of the LFO (low frequency oscillator) modulator.
LFO WAVEFORM	: Waveform of the LFO (low frequency oscillator) modulator.
VOLUME	: Volume of the sound to the effect is applied.

(• : Parameter which can be assigned to DYNAMIC CONTROL, ►: default)
(＊1～＊18 : Refer to page33)

DSP EFFECT

PEQ + SINGLE DELAY

EFFECT No.; 72

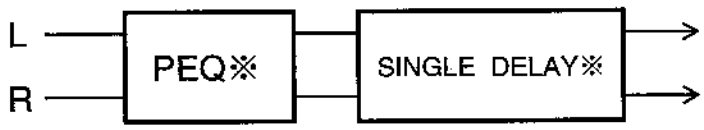

				MIDI DATA	MIDI VALUE
Combines parametric equalizer with delay.	BAND EMPHASIS 1 Fc	50 Hz	– 16kHz	*6	
	BAND EMPHASIS 1 Q	0.1	– 20	*7	1,2
	BAND EMPHASIS 1 G	–12	– +12dB	*8	*17
	BAND EMPHASIS 2 Fc	50 Hz	– 16kHz	*6	
	BAND EMPHASIS 2 Q	0.1	– 20	*7	3,4
	BAND EMPHASIS 2 G	–12	– +12dB	*8	*17
	▶ DELAY DRY/WET	0	– 99	←	5
	DELAY L	0	– 300ms	←	6,7
	DELAY R	0	– 300ms	←	8,9
	• FEEDBACK L	–99	– 99	←	10
	• FEEDBACK R	–99	– 99	←	11
	• VOLUME	0	– 99	←	12

BAND EMPHASIS Fc	: Center frequency of the modified band.
BAND EMPHASIS Q	: Sharpness of the curve of the frequency characteristic of the modified band.
BAND EMPHASIS G	: Volume of emphasis/dumping in the modified band.
DRY/WET	: The proportion at which the original sound and the effect-altered sound are mixed.
DELAY	: Time difference between original sound and the repeat (ms).
FEEDBACK	: Feedback volume (inverted when a minus level).
VOLUME	: Volume of the sound to the effect is applied.

(• : Parameter which can be assigned to DYNAMIC CONTROL, ▶: default)

(*1～*18 : Refer to page33)

DSP EFFECT

PEQ + FLANGER

EFFECT No.; 73

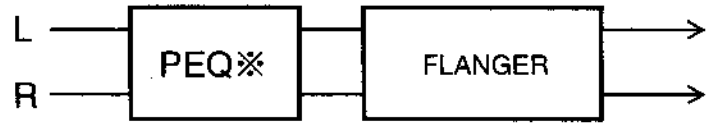

				MIDI DATA	MIDI VALUE
Combines parametric equalizer with flanger.	BAND EMPHASIS 1 Fc	50 Hz	– 16 kHz	＊6	
	BAND EMPHASIS 1 Q	0.1	– 20	＊7	1,2
	BAND EMPHASIS 1 G	–12	– +12 dB	＊8	＊17
	BAND EMPHASIS 2 Fc	50 Hz	– 16kHz	＊6	
	BAND EMPHASIS 2 Q	0.1	– 20	＊7	3,4
	BAND EMPHASIS 2 G	–12	– +12dB	＊8	＊17
	• FLANGER DRY/WET	0	– 99	←	5
	• DEPTH	0	– 99	←	6
	• LFO SPEED	0	– 40.2 Hz	＊3	7
	► RESONANCE	–99	– +99	←	8
	MANUAL	0	– 99	←	9
	PHASE	0	– 180 degree	←	10
	LFO WAVEFORM	sin,tri,square		＊4	11
	• VOLUME	0	– 99	←	12

BAND EMPHASIS Fc	: Center frequency of the modified band.
BAND EMPHASIS Q	: Sharpness of the curve of the frequency characteristic of the modified band.
BAND EMPHASIS G	: Volume of emphasis/dumping in the modified band.
DRY/WET	: The proportion at which the original sound and the effect-altered sound are mixed.
DEPTH	: Depth of the effect.
LFO SPEED	: Transmission frequency of the LFO (low frequency oscillator) modulator.
RESONANCE	: Feedback type.
MANUAL	: Center frequency to which the effect is applied.
PHASE	: Phase difference between left and right modulation.
LFO WAVEFORM	: Waveform of the LFO (low frequency oscillator) modulator.
VOLUME	: Volume of the sound to the effect is applied.

(• : Parameter which can be assigned to DYNAMIC CONTROL, ►: default)
(＊1～＊18 : Refer to page33)

DSP EFFECT

PEQ + VIBRATO

EFFECT No.; 74

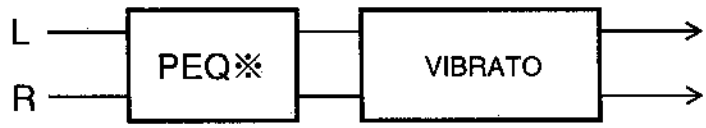

Combines parametric equalizer with vibrato.

			MIDI DATA	MIDI VALUE
	BAND EMPHASIS 1 Fc	50 Hz – 16kHz	＊6	
	BAND EMPHASIS 1 Q	0.1 – 20	＊7	1,2
	BAND EMPHASIS 1 G	–12 – +12dB	＊8	＊17
	BAND EMPHASIS 2 Fc	50 Hz – 16kHz	＊6	
	BAND EMPHASIS 2 Q	0.1 – 20	＊7	3,4
	BAND EMPHASIS 2 G	–12 – +12dB	＊8	＊17
	• VIBRATO DRY/WET	0 – 99	←	5
	• DEPTH	0 – 99Hz	←	6
	► LFO SPEED	0 – 40.2degree	＊3	7
	PHASE	0 – 180	←	8
	LFO WAVEFORM	sin,tri,square	＊4	9
	• VOLUME	0 – 99	←	10

BAND EMPHASIS Fc	: Center frequency of the modified band.
BAND EMPHASIS Q	: Sharpness of the curve of the frequency characteristic of the modified band.
BAND EMPHASIS G	: Volume of emphasis/dumping in the modified band.
DRY/WET	: The proportion at which the original sound and the effect-altered sound are mixed.
DEPTH	: Depth of the effect.
LFO SPEED	: Transmission frequency of the LFO (low frequency oscillator) modulator.
PHASE	: Phase difference between left and right modulation.
LFO WAVEFORM	: Waveform of the LFO (low frequency oscillator) modulator.
VOLUME	: Volume of the sound to the effect is applied.

PEQ + COMPRESSOR

EFFECT No.; 75

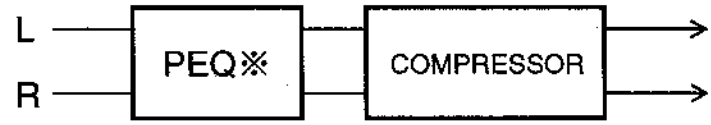

Combines parametric equalizer with compressor.

			MIDI DATA	MIDI VALUE
	BAND EMPHASIS 1 Fc	50 Hz – 16 kHz	＊6	
	BAND EMPHASIS 1 Q	0.1 – 20	＊7	1,2
	BAND EMPHASIS 1 G	–12 – +12 dB	＊8	＊17
	BAND EMPHASIS 2 Fc	50 Hz – 16kHz	＊6	
	BAND EMPHASIS 2 Q	0.1 – 20	＊7	3,4
	BAND EMPHASIS 2 G	–12 – +12 dB	＊8	＊17
	THRESHOLD	0 – 99	←	5
	RATIO	0 – 99	←	6
	► ATTACK SENSITIVITY	0.001 – 0.5s	＊9	7
	• RELEASE SENSITIVITY	0.001 – 0.5s	＊9	8
	• VOLUME	0 – 99	←	9

BAND EMPHASIS Fc	: Center frequency of the modified band.
BAND EMPHASIS Q	: Sharpness of the curve of the frequency characteristic of the modified band.
BAND EMPHASIS G	: Volume of emphasis/dumping in the modified band.
THRESHOLD	: The boundary point at which the effect is applied.
RATIO	: The ratio of the effect.
ATTACK SENSITIVITY	: Sensitivity of the effect at the time of attack (reaction speed).
RELEASE SENSITIVITY	: Sensitivity of the effect at the time of release (reaction speed).
VOLUME	: Volume of the sound to the effect is applied.

(• : Parameter which can be assigned to DYNAMIC CONTROL, ►: default)
(＊1～＊18 : Refer to page33)

DSP EFFECT

PEQ + COMPR + DIST

EFFECT No.; 96

					MIDI DATA	MIDI VALUE
Combines parametric equalizer, compressor, and distortion.	BAND EMPHASIS 1 Fc	50 Hz	–	16 kHz	＊6	
	BAND EMPHASIS 1 Q	0.1	–	20	＊7	1,2
	BAND EMPHASIS 1 G	–12	–	+12 dB	＊8	＊17
	BAND EMPHASIS 2 Fc	50 Hz	–	16 kHz	＊6	
	BAND EMPHASIS 2 Q	0.1	–	20	＊7	3,4
	BAND EMPHASIS 2 G	–12	–	+12 dB	＊8	＊17
	THRESHOLD	0	–	99	←	5
	RATIO	0	–	99	←	6
	▶ ATTACK SENSITIVITY	0.001	–	0.5s	＊9	7
	• RELEASE SENSITIVITY	0.001	–	0.5s	＊9	8
	• DRIVE	0	–	99	←	9
	• ADJUST	0	–	99	←	10
	• VOLUME	0	–	99	←	11

BAND EMPHASIS Fc	: Center frequency of the modified band.
BAND EMPHASIS Q	: Sharpness of the curve of the frequency characteristic of the modified band.
BAND EMPHASIS G	: Volume of emphasis/dumping in the modified band.
THRESHOLD	: The boundary point at which the effect is applied.
RATIO	: The ratio of the effect.
ATTACK SENSITIVITY	: Sensitivity of the effect at the time of attack (reaction speed).
RELEASE SENSITIVITY	: Sensitivity of the effect at the time of release (reaction speed).
DRIVE	: Degree of distortion.
ADJUST	: The manner in which the effect is applied.
VOLUME	: Volume of the sound to the effect is applied.

PEQ + COMPR + OVERDR

EFFECT No.; 97

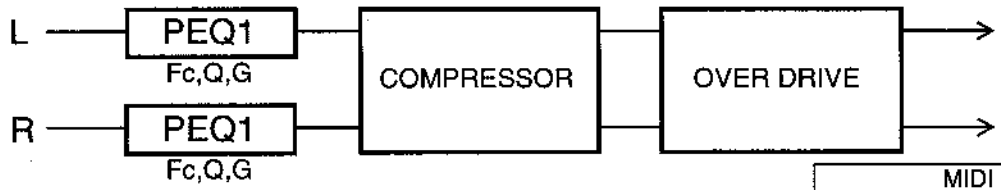

					MIDI DATA	MIDI VALUE
Combines parametric equalizer, compressor, and overdrive.	BAND EMPHASIS Fc	50 Hz	–	16 kHz	＊6	
	BAND EMPHASIS Q	0.1	–	20	＊7	1,2
	BAND EMPHASIS G	–12	–	+12 dB	＊8	＊17
	THRESHOLD	0	–	99	←	3
	RATIO	0	–	99	←	4
	▶ ATTACK SENSITIVITY	0.001	–	0.5 s	＊9	5
	• RELEASE SENSITIVITY	0.001	–	0.5 s	＊9	6
	• DRIVE	0	–	99	←	7
	• ADJUST	0	–	99	←	8
	• VOLUME	0	–	99	←	9

BAND EMPHASIS Fc	: Center frequency of the modified band.
BAND EMPHASIS Q	: Sharpness of the curve of the frequency characteristic of the modified band.
BAND EMPHASIS G	: Volume of emphasis/dumping in the modified band.
THRESHOLD	: The boundary point at which the effect is applied.
RATIO	: The ratio of the effect.
ATTACK SENSITIVITY	: Sensitivity of the effect at the time of attack (reaction speed).
RELEASE SENSITIVITY	: Sensitivity of the effect at the time of release (reaction speed).
DRIVE	: Degree of distortion.
ADJUST	: The manner in which the effect is applied.
VOLUME	: Volume of the sound to the effect is applied.

(• : Parameter which can be assigned to DYNAMIC CONTROL, ▶: default)

(＊1～＊18 : Refer to page33)

DSP EFFECT

PEQ + DIST + DELAY

EFFECT No.; 98

				MIDI DATA	MIDI VALUE
Combines parametric equalizer, distortion, and delay.	BAND EMPHASIS 1 Fc	50 Hz	– 16 kHz	＊6	
	BAND EMPHASIS 1 Q	0.1	– 20	＊7	1,2
	BAND EMPHASIS 1 G	–12	– +12 dB	＊8	＊17
	BAND EMPHASIS 2 Fc	50 Hz	– 16kHz	＊6	
	BAND EMPHASIS 2 Q	0.1	– 20	＊7	3,4
	BAND EMPHASIS 2 G	–12	– +12 dB	＊8	＊17
	• DRIVE	0	– 99	←	5
	• ADJUST	0	– 99	←	6
	► DELAY DRY/WET	0	– 99	←	7
	DELAY L	0	– 300ms	←	8,9
	DELAY R	0	– 300ms	←	10,11
	• FEEDBACK L	–99	– +99	←	12
	• FEEDBACK R	–99	– +99	←	13
	• VOLUME	0	– 99	←	14

BAND EMPHASIS Fc	: Center frequency of the modified band.
BAND EMPHASIS Q	: Sharpness of the curve of the frequency characteristic of the modified band.
BAND EMPHASIS G	: Volume of emphasis/dumping in the modified band.
DRIVE	: Degree of distortion.
ADJUST	: The manner in which the effect is applied.
DRY/WET	: The proportion at which the original sound and the effect-altered sound are mixed.
DELAY	: Time difference between original sound and the repeat (ms).
FEEDBACK	: Feedback volume (inverted when a minus level).
VOLUME	: Volume of the sound to the effect is applied.

PEQ + OVERDR + DELAY

EFFECT No.; 99

				MIDI DATA	MIDI VALUE
Combines parametric equalizer, overdrive, and delay.	BAND EMPHASIS 1 Fc	50 Hz	– 16 kHz	＊6	
	BAND EMPHASIS 1 Q	0.1	– 20	＊7	1,2
	BAND EMPHASIS 1 G	–12	– +12 dB	＊8	＊17
	BAND EMPHASIS 2 Fc	50 Hz	– 16kHz	＊6	
	BAND EMPHASIS 2 Q	0.1	– 20	＊7	3,4
	BAND EMPHASIS 2 G	–12	– +12 dB	＊8	＊17
	• DRIVE	0	– 99	←	5
	• ADJUST	0	– 99	←	6
	► DELAY DRY/WET	0	– 99	←	7
	DELAY L	0	– 300 ms	←	8,9
	DELAY R	0	– 300 ms	←	10,11
	• FEEDBACK L	–99	– +99	←	12
	• FEEDBACK R	–99	– +99	←	13
	• VOLUME	0	– 99	←	14

BAND EMPHASIS Fc	: Center frequency of the modified band.
BAND EMPHASIS Q	: Sharpness of the curve of the frequency characteristic of the modified band.
BAND EMPHASIS G	: Volume of emphasis/dumping in the modified band.
DRIVE	: Degree of distortion.
ADJUST	: The manner in which the effect is applied.
DRY/WET	: The proportion at which the original sound and the effect-altered sound are mixed.
DELAY	: Time difference between original sound and the repeat (ms).
FEEDBACK	: Feedback volume (inverted when a minus level).
VOLUME	: Volume of the sound to the effect is applied.

(• : Parameter which can be assigned to DYNAMIC CONTROL, ►: default)
(＊1～＊18 : Refer to page33)

DSP EFFECT data table for MIDI Control

*TABLE 1: Reverb time

parameter	time (sec)	step
0 – 15	0.10 – 0.40	0.02
16 – 23	0.45 – 0.80	0.05
24 – 55	0.90 – 4.00	0.10
56 – 75	4.20 – 8.00	0.20
76 – 97	9.00 – 30.0	1.00

*TABLE 2: High dump Gain

parameter	Gain(dB)	step
0 – 24	–24.0 – 0.0	1.0

*TABLE 3: LFO speed

parameter	Hz	step
0 – 50	0.0 – 5.0	0.1
51 – 75	5.2 – 10.0	0.2
76 – 88	10.8 – 20.4	0.8
89 – 99	22.2 – 40.2	1.8

*TABLE 4: LFO wave form

parameter	wave form
0	sine
1	triangle
2	square

*TABLE 5: Gate time & Mask time for gated reverb

parameter	time (msec)	step
0 – 20	10 – 50	2
21 – 30	55 – 100	5
31 – 70	110 – 500	10
71 – 80	550 – 1000	50
81 – 99	1100 – 2900	100

*TABLE 6: PEQ Fc

parameter	Fc(Hz)	parameter	Fc(Hz)
0	40	14	1 k
1	50	15	1.25 k
2	63	16	1.6 k
3	80	17	2 k
4	100	18	2.5 k
5	125	19	3.15 k
6	160	20	4 k
7	200	21	5 k
8	250	22	6.3 k
9	315	23	8 k
10	400	24	10 k
11	500	25	12.5 k
12	630	26	16 k
13	800		

*TABLE 7: PEQ Q

parameter	Q	step
0 – 9	0.1 – 1.0	0.1
10 – 15	1.5 – 4.0	0.5
16 – 31	5.0 – 20.0	1.0

*TABLE 8: PEQ Gain

parameter	Gain(dB)	step
0 – 48	–12.0 – 12.0	0.5

*TABLE 9: Attack & Release sensitivity

parameter	90% swing time(sec)	step
0 – 89	0.001 – 0.090	0.001
90	0.10	0.010
91 – 94	0.20 – 0.50	0.100

*TABLE 10: Attack for slow Attacker

parameter	90% swing time(sec)	step
0 – 99 (attack)	0.2 – 20.0	2
0 – 99 (release)	0.01 – 1.0	0.01

*TABLE 11: LFO speed for rotary speaker

parameter	Hz	step
0 – 20	0 – 2.0	0.1
21 – 50	2.2 – 8.0	0.2
51 – 99	8.55 – 34.95	0.55

*TABLE 12: LFO acceralation for rotary speaker

parameter	90%swing time(sec)	step
0 – 75	1.0 – 31.0	0.4
76 – 99	32.25 – 61.00	1.25

*TABLE 13: LFO speed for ring modulator

parameter	Hz	step
0 – 10	0 – 10	1
11 – 19	20 – 100	10
20 – 64	120 – 1000	20
65 – 87	1.2k – 10.0k	400
88 – 99	10.8k – 19.6k	800

*TABLE 14: Pitch L & R for pitch shifter

parameter	Pitch (cent)	step
–36 – –32	–1200 – –800	100
–31 – –20	–700 – –150	50
–19 – –11	–100 – –20	10
–10 – 10	–10 – 10	1
11 – 19	20 – 100	10
20 – 31	150 – 700	50
32 – 36	800 – 1200	100

*TABLE 15: Resonance for wah

parameter	Resonance
0	wide
1	middle
2	narrow

*TABLE 16: Slow/Fast for rotary speaker

parameter	Slow/Fast
0	slow
1	fast

*TABLE 17: Data format for PEQ Q, Fc, G

PEQ Q	PEQ Fc		PEQ G
5bit	3bit	2bit	6bit

*TABLE 18: Data format for Exciter Emphasis Fc

	Emphasis Fc		
(5bit)	3bit	2bit	(6bit)

■ Data format for Pre/Post Equalizer Fc,G(TABLE6,8)

	EQ Fc		EQ G
(5bit)	3bit	2bit	6bit

MIDI Implementation Chart

Synthesizer [SX-WSA1] /Synthesizer module [SX-WSA1R] **(Transmitted)**

Function		PART1～32	Remarks
Basic Channel	Default	1–1～2–16	MIDI1: 1–1～1–16, MIDI2: 2–1～2–16
	Changed	1–1～2–16	Single Channel: 1–1～1–16
MODE	Default	3	OMNI OFF, POLY MODE
	Messages	×	
	Altered	–	
Note Number		0–127	
	True Voice	–	
Velocity	Note ON	○	
	Note OFF	×	
After Touch	Key's	×	
	Ch's	○×*	
Pitch Bend		○×*	
Control Change	0,32	○×*	bank select MSB, LSB
	1,2		modulation 1, 2 default
	4		control pedal default
	6,38		data entry MSB, LSB
	7		volume
	10		panpot
	11		expression
	16,17		realtime creator X, Y default
	18,19		realtime controller X, Y default
	64		hold1
	81		realtime creator SW1–6
	91		reverb depth
	93,94		effect1, 2 depth
	100,101		RPN LSB, MSB
	120		all sound off
	121		reset all controllers
Prog Change		○×*	
	True#	–	
System Exclusive		○×*	
System Common	Song Pos	○×*	MIDI 1 only
	Song Sel	○×*	MIDI 1 only
	Tune	×	
System Real time	Clock	○	
	Commands	○×*	
Aux Messages	Local ON/OFF	×	
	ALL notes OFF	×	
	Active Sense	○	
	Reset	×	
Notes		○×*.....Whether or not the data for each of these items is transmitted can be set.	

Mode1: OMNI ON,POLY **Mode2:** OMNI ON,MONO ○:Yes

Mode3: OMNI OFF,POLY **Mode4:** OMNI OFF,MONO ×:No

MIDI Implementation Chart

Synthesizer [SX-WSA1] /Synthesizer module [SX-WSA1R] **(Recognized)**

Function		PART1～32	Remarks
Basic Channel	Default	1–1～2–16	MIDI1: 1–1～1–16, MIDI2: 2–1～2–16
	Changed	1–1～2–16	Single Channel: 1–1～1–16
MODE	Default	3	OMNI OFF, POLY MODE
	Messages	×	
	Altered	–	
Note Number		0–127	
	True Voice	12–120 / 0–127	Normal Sound:12–120, Drum Sound:0–127
Velocity	Note ON	○	
	Note OFF	×	
After Touch	Key's	×	
	Ch's	○×*	
Pitch Bend		○×*	
Control Change	0,32	○×*	bank select MSB, LSB
	1,2		modulation 1, 2 default
	4		control pedal default
	6,38		data entry MSB, LSB
	7		volume
	10		panpot
	11		expression
	16,17		realtime creator X, Y default
	18,19		realtime controller X, Y default
	64		hold1
	81		realtime creator SW1–6
	91		reverb depth
	93,94		effect1, 2 depth
	100,101		RPN LSB, MSB
	120		all sound off
	121		reset all controllers
Prog Change		○×*	
	True#	0–127	
System Exclusive		○×*	
System Common	Song Pos	○×*	MIDI 1 only
	Song Sel	○×*	MIDI 1 only
	Tune	×	
System Real time	Clock	○×*	
	Commands	○×*	
Aux Messages	Local ON/OFF	×	
	ALL notes OFF	○	
	Active Sense	○	
	Reset	×	
Notes		○×*.....Whether or not the data for each of these items is recognized can be set.	

Mode1: OMNI ON,POLY **Mode2:** OMNI ON,MONO ○:Yes

Mode3: OMNI OFF,POLY **Mode4:** OMNI OFF,MONO ×:No

MIDI DATA FORMAT

MIDI Data Flowchart

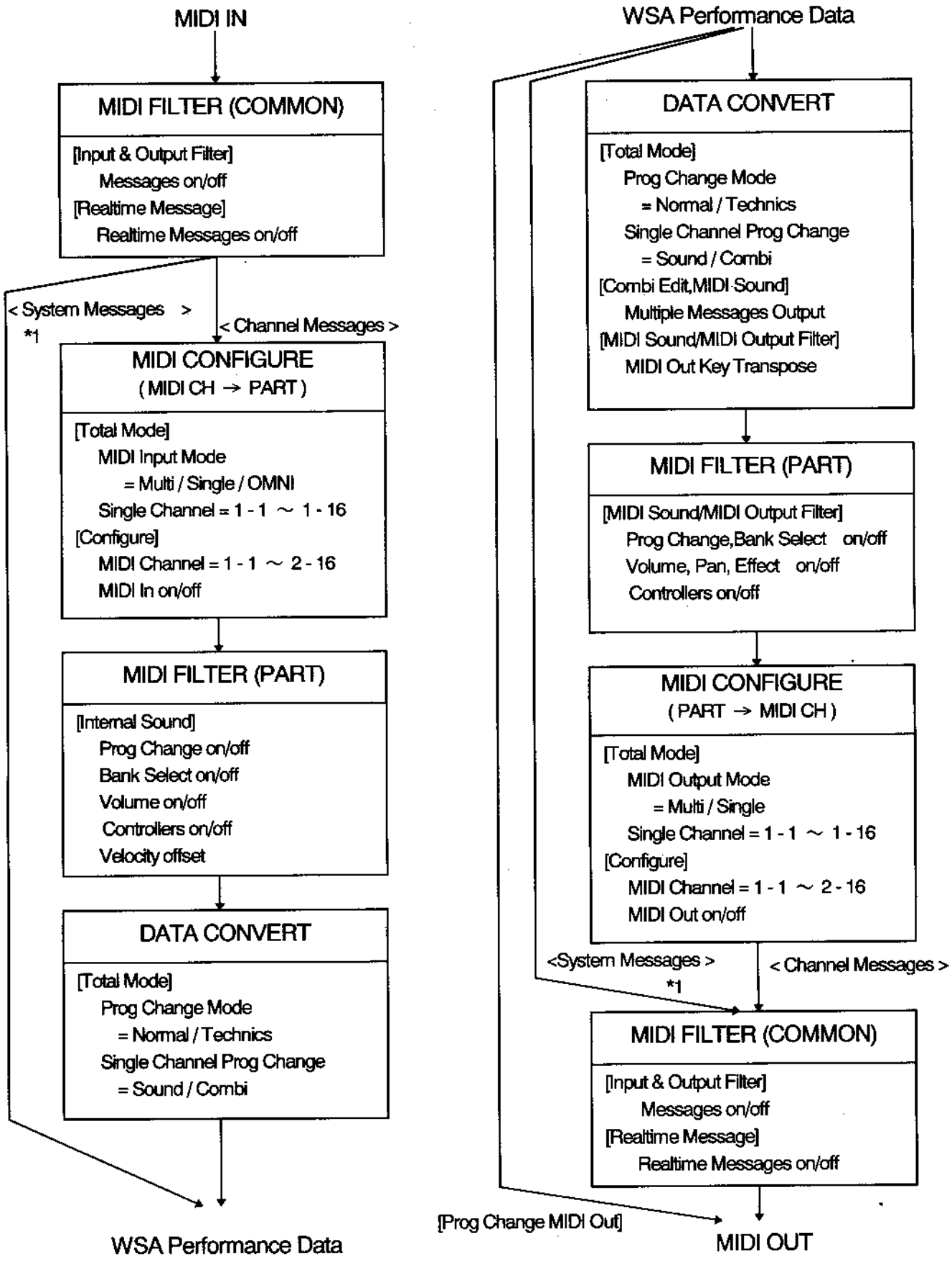

*1 System Message (except Active Sense) and System Exclusive Bulk Dump data cannot be transmitted/received on the MIDI 2 terminals.

Performance Data Flowchart

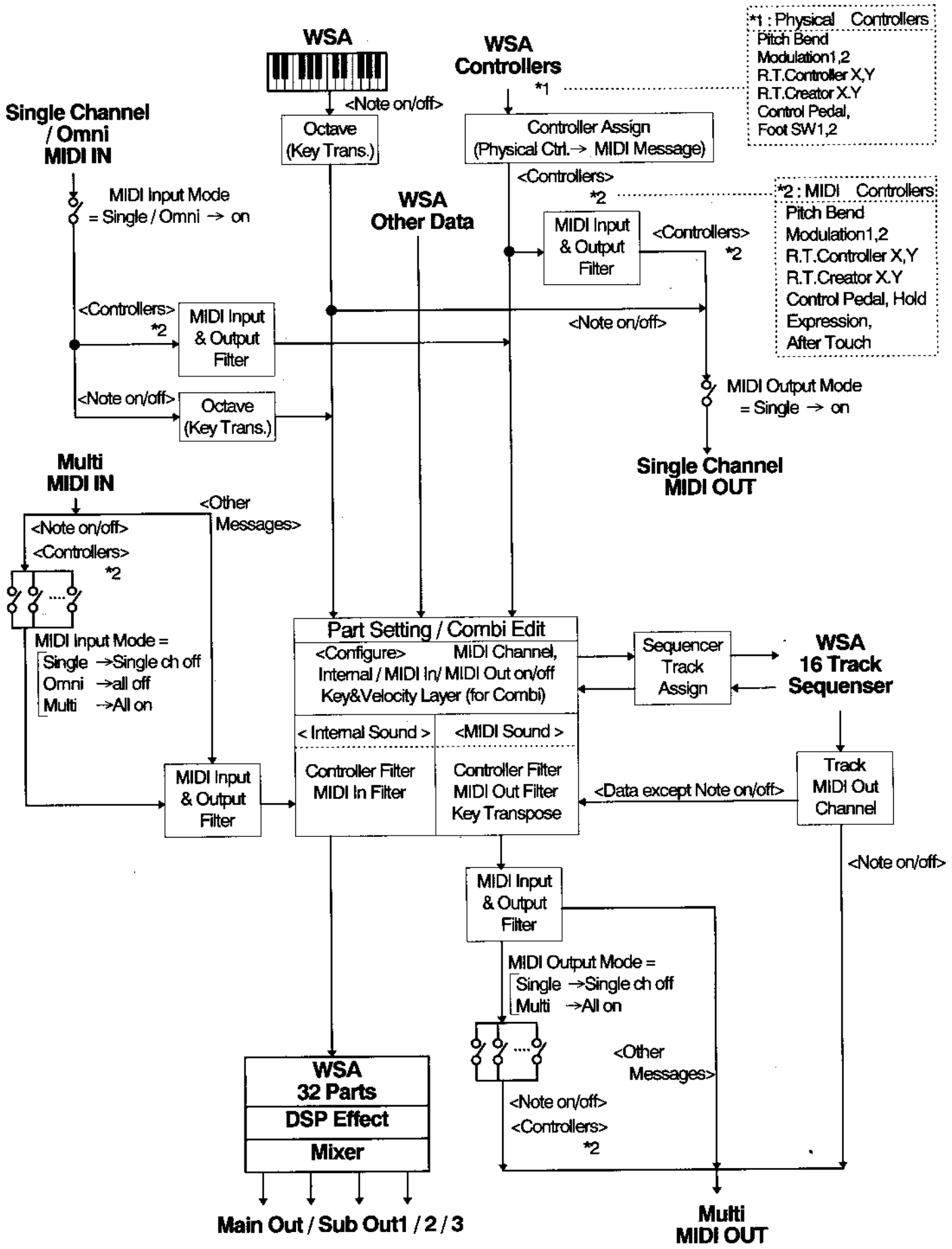

Message format

■Channel voice message

●Note off

8nH	Note off status
kk	Note number
vv	velocity

n : 0-F Basic channel
kk: 00H-7FH note number
vv: 00H-7FH velocity

- This status is not used during transmission; rather, velocity=0 is transmitted with the note on status.

●Note on

9nH	Note on status
kk	Note number
vv	velocity

n : 0-F Basic channel
kk: 00H-7FH note number
vv: 01H-7FH velocity
00H Note off

●Control change

Bank select

BnH	Control change status
00H	Bank select(MSB)
mm	Bank select value(MSB)
(BnH)	Control change status
20H	Bank select(LSB)
ll	Bank select value(LSB)

n : 0-F Basic channel
mm,ll: 00H-7FH

- Indicates program change bank.

Modulation (modulation 1)

BnH	Control change status
01H	Modulation 1
vv	Modulation 1 value

n : 0-F Basic channel
vv: 00H-7FH

Breath controller (Modulation 2)

BnH	Control change status
02H	Modulation 2
vv	Modulation 2 value

n : 0-F Basic channel
vv: 00H-7FH

Control pedal

BnH	Control change status
04H	Control pedal
vv	Control pedal value

n : 0-F Basic channel
vv: 00H-7FH

Data entry

BnH	Control change status
06H	Data entry(MSB)
mm	Data entry value(MSB)
(BnH)	Control change status
26H	Data entry(LSB)
ll	Data entry value(LSB)

n : 0-F Basic channel
mm,ll: Values conform to the parameters specified for the RPN.

Volume

BnH	Control change status
07H	Part volume
vv	Part volume value

n : 0-F Basic channel
vv: 00H-7FH

Panpot

BnH	Control change status
0AH	Panpot
vv	Panpot value

n : 0-F Basic channel
vv: 00H-7FH

Expression

BnH	Control change status
0BH	Expression
vv	Expression value

n : 0-F Basic channel
vv: 00H-7FH

Universal controller 1 (R.T.Creator X)

BnH	Control change status
10H	R.T.creator X
vv	R.T.creator X value

n : 0-F Basic channel
vv: 00H-7FH

Universal controller 2 (R.T.Creator Y)

BnH	Control change status
11H	R.T.creator Y
vv	R.T.creator Y value

n : 0-F Basic channel
vv: 00H-7FH

Universal controller 3 (R.T.Controller X)

BnH	Control change status
12H	R.T.controller X
vv	R.T.controller X value

n : 0-F Basic channel
vv: 00H-7FH

Universal controller 4 (R.T.Controller Y)

BnH	Control change status
13H	R.T.controller Y
vv	R.T.controller Y value

n : 0-F Basic channel
vv: 00H-7FH

Hold1

BnH	Control change status
40H	Hold1
vv	Hold1 value

n : 0-F Basic channel
vv: 00H-7FH

Universal controller 6 (R.T.Creator sw1-6)

BnH	Control change status
51H	R.T.creator sw1-6
vv	R.T.creator sw1-6 value

n : 0-F Basic channel
vv: 0 - 5 R.T.creator sw1-6
64 - 69 R.T.controller sw1-6

Reverb depth (Reverb send)

BnH	Control change status
5BH	Reverb send
vv	Reverb send value

n : 0-F Basic channel
vv: 00H-7FH

Chorus depth (Effect1 send)

BnH	Control change status
5DH	Effect1 send
vv	Effect1 send value

n : 0-F Basic channel
vv: 00H-7FH

Celeste depth (Effect2 on/off)

BnH	Control change status
5EH	Effect2 on/off
vv	Effect2 on/off value

n : 0-F Basic channel
vv: 00H-7FH
- It is impossible to use both the Main and Sub outputs if Effect2 is turn on.

RPN

BnH	Control change status
65H	RPN (MSB)
mm	RPN data number (MSB)
(BnH)	Control change status
64H	RPN (LSB)
ll	RPN data number (LSB)

n : 0-F Basic channel
mm,ll :The most significant byte (MSB) and least significant byte (LSB) of the parameter number specified for the RPN.

The RPN which can be transmitted/received .are Pitch Bend Sensitivity, Fine Tuning, Coarse Tuning (corresponding respectively to the Bend Range, Fine Tune, and Key Shift of the WSA), and RPN reset,

RPN		Data Entry		
MSB	LSB	MSB	LSB	
00H	00H	mm	---	**Pitch Bend Sensitivity** mm: 00H-0CH (0 - 12semi-tones) ll: ignored ·Up to I octave can be specified in semi-tone increments
00H	01H	mm	ll	**Fine Tuning** mm,ll:00H,00H - 40H,00H -7FH,7FH **(-128×100/128 - 0 - 127×100/128 Cents)** 1l:00Hor40H (lower 6 bits ignored) · Can be specified in I00/128 cent increments.
00H	02H	mm	---	**Coarse Tuning** mm,1CH - 40H - 64H (-36 - 0 - + 36 semitones) ll:ignored ·Up to 3octave can be specified insemi-tone increments.
7FH	7FH	---	---	**RPN Reset** mm , l l : ignored ·For when the RPN number is not specified. ·The internal set value does not change.

●Program change

CnH	Program change status
pp	Program change value

n : 0-F Basic channel
pp: 00H-7FH Program change value

Normal mode: Numbers are correspond to the sound number displayed on screen.
Technics mode:Numbers are standardized among Technics modes(Bank Select also used).

●Channel pressure (After Touch)

DnH	Channel pressure status
vv	Channel pressure value

n: 0-F Basic channel
vv :00H -7FH

●Pitch bend change

EnH	Pitch bend status
ll	Pitch bend value(LSB)
mm	Pitch bend value(MSB)

n : 0-F Basic channel
ll,mm: 00H-7FH Pitch bend data

- The Pitch Bend Range is determined by the Pitch Bend Range of each part.

■Channel mode message

All Sound Off

BnH	Channel mode status
78H	All sound off
00H	dummy data

n : 0-F Basic channel

Reset All Controllers

BnH	Channel mode status
79H	Reset all controllers
00H	dummy data

n : 0-F Basic channel

All Note Off

BnH	Channel mode status
7BH	All note off
00H	dummy data

n : 0-F Basic channel

- Receive only

OMNI off

BnH	Channel mode status
7CH	OMNI off
00H	dummy data

n : 0-F Basic channel

- Processed in same manner as when ALL Note off is received.

OMNI on

BnH	Channel mode status
7DH	OMNI on
00H	dummy data

n : 0-F Basic channel

- Processed in same manner as when ALL Note off is received. Does not change to OMNI on.

MONO

BnH	Channel mode status
7EH	MONO
00H	dummy data

n : 0-F Basic channel

- Processed in same manner as when ALL Note off is received. Does not change to MONO.

POLY

BnH	Channel mode status
7FH	POLY
00H	dummy data

n : 0-F Basic channel

- Processed in same manner as when ALL Note off is received.

■System common message

Song Position pointer

F2H	Song Position pointer
ll	least significant
mm	most significant

ll,mm:00H-7FH

- only MIDI 1

Song Select

F3H	Song select
ss	Song number

ss: 0 - 19

- only MIDI 1

■System realtime message

Timing Clock

F8H	Timing clock

- only MIDI 1

Start

FAH	Start

- only MIDI 1

Continue

FBH	Continue

- only MIDI 1

Stop

FCH	Stop

- only MIDI 1

Active Sense

FEH	Active sense

System exclusive

F0H	System exclusive status
ii	ID number
dd	data
:	:
dd	data
F7H	End Of Exclusive status

ii: 7EH(universal Non-Real time ID), 50H(Techinics ID)
dd: 00H-7FH

About the WSA1/WSA1R MIDI exclusive

Outline of WSA1/WSA1R MIDI exclusive

WSA1/WSA1R MIDI exclusive
- universal system exclusive
  - GM on
  - GM off
- Technics MIDI exclusive
  - transmission/reception of individual data
  - data dump
  - data request
  - transmission/reception of tempo data

Universal system exclusive Message format

Turn General MIDI System On

F0H	Exclusive status
7EH	Universal Non-Real Time SysEx
7FH	ID of target device (7F:Broadcast)
09H	sub-ID #1 = General MIDI message
01H	sub-ID #2 = General MIDI on
F7H	EOX

Turn General MIDI System Off

F0H	Exclusive status
7EH	Universal Non-Real Time SysEx
7FH	ID of target device (7F:Broadcast)
09H	sub-ID #1 = General MIDI message
02H	sub-ID #2 = General MIDI off
F7H	EOX

Technics MIDI exclusive Message format

■Types of messages and their forms

SOX	Exclusive status
IDC	Technics ID number
CMD	Command ID
PC	Keyboard category ID
MD	Model differentiating ID
VER	Exclusive version ID
[data]	Body of data
EOX	End of exclusive

Messages are transmitted in order,beginning with SOX,IDC,etc. and continuing to the end.
The form of the transmission message differs depending on the type of command.

■Explanation of messages

SOX : Indicates the start of exclusive

F0H	Exclusive status

IDC : Product manufacturer differentiating ID

50H	Technics ID number

CMD : Indicates type of transmission data and commands.

21H	HRQ : Hand shake request
22H	HRT : Hand shake routine
23H	ACK : Acknowledge
24H	NAK : Negative Acknowledge
25H	TMP : Tempo data
27H	EOK : End of Block
28H	END : End
29H	ERR : Error
2AH	FUL : Memory full
2BH	DRQ : Data request
2CH	ITR : Individual data
2DH	BTR : Data block
7EH	CDD : Continuing data

PC : Technics product category ID

04H	WSA
7EH	DMY: Dummy data for ACK,NAK,EOK,END,ERR,FUL

MD : Model differentiating ID

00H	WSA1
01H	WSA1R

VER : Exclusive version control ID

11H	Ver2.1

[data]: Body of data

・[data] for Individual data, Data dump, and Data request.

ADR	ADR (MSB)	ADDRESS MSB	(7bit)
	ADR	:	(7bit)
	ADR (LSB)	ADDRESS LSB	(7bit)
SIZ	SIZ (MSB)	MSB of the address length of relevant data from the above address.	(7bit)
	SIZ	:	(7bit)
	SIZ (LSB)	LSB of the address length of relevant data from the above address.	(7bit)
	DT	data	
	:	:	
	CN	Continue ID	
	SM	Checksum	

ADR :
Indicates address length of beginning data. The type of data is recognized by this value. The 21-bit address is divided into 3bytes of 7 bits each, and is sent in order beginning with the upper end.
(Refer to the address map.)

SIZ :
Indicates length of address from ADR. (Refer to the address map.) The 21-bit address length is divided into 3 bytes of 7 bytes each,and is sent in order beginning with the upper end.
If a size not consistent with the data is indicated, data request is ineffective. If the data request concerns the data dump, then dummy data is sent, although it has no significance.

DT :
Body of transmitted data. The 8-bit data is divided into 2 bytes of 4 bits each, and is sent in order beginning with the upper end.
Note that SIZ == number of bytes in DT divided by 2.

CN : Indicates data continue/discontinue
00h STP : End of data
01H CNT : More data follows
(CMD of next packet is CDD)
The number of bytes in one exclusive packet is 256. In a transmission where the number of bytes exceeds one packet, CN = CNT, and the continuing data is transmitted in the continuing data (CMD=CDD) format.

SM : Checksum
Checksum for checking data errors.
The lower 7bits of Summation from IDC to SM = 0.

***[data] for Tempo.**

DT1	Data LSB
DT2	Data MSB

DT2,DT1 : 02H,08H - 12H,0Ch
(♩= 40 - 300)
Tempo data is 9bit Binary (= 101000~100101100)
The lower 4 bits is expressed as DTI , and the remaining upper 5 bits as DT2. DTI is sent first followed by DT2.

Classification of individual data and data dump

Individual data area

System	
Part	(Common / individual / special)
Sound	(Parameter only)
Combination	(Parameter only)

Data dump area

Sound	(Parameter)
Panel	(Header + Panel data)
Combination	(Header + Parameter)
Sequencer	(Location + Header + Performance)

One-way transmission and handshake transmission

In one-way transmission,communication takes place in one direction only,that is from the master unit to the slave unit。

In handshake transmission,the transmission status between the master unit and slave unit is being confirmed during data transmission. For this reason, a MIDI cable connection from the slave unit to the master unit is also necessary. In comparison to one-way transmission, handshake transmission is faster.

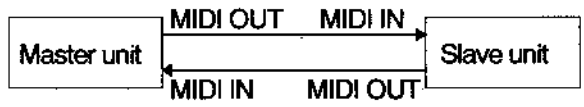

In the WSA1/WSA1R, the transmission mode is switched automatically between handshake transmission and. one-way transmission. Communication begins with handshake transmission, and if there is no response from the slave unit within a given time. communication switches automatically to one-way transmission.

Communication sequence between master unit and slave unit

■Communication sequence of handshake confirmation

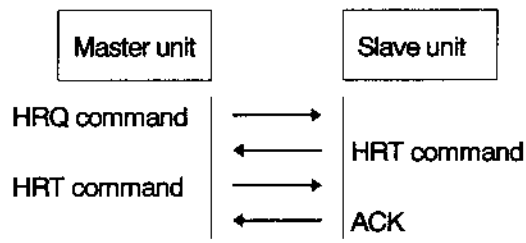

HRQ command: handshake request

SOX	F0H
IDC	50H
HRQ	21H
PC	04H
MD	00H
VER	11H
EOX	F7H

HRT command: handshake routine

SOX	F0H
IDC	50H
HRQ	22H
PC	04H
MD	00H
VER	11H
EOX	F7H

ACK: Acknowledge

SOX	F0H
IDC	50H
ACK	23H
DMY	7EH
EOX	F7H

- There is no END command.
- If there is no response from the slave unit to the master unit even after the above handshake confirmation routine is performed three times,it is interpreted as inability to transmit handshake transmission data, and the transmission mode switches to one-way transmission (in the case of a MIDI sequencer, etc.) .
- Handshake communication is possible only during data dump.

■Sequence of tempo data communication

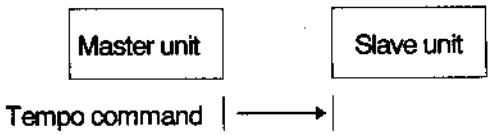

■Sequence of individual data communication

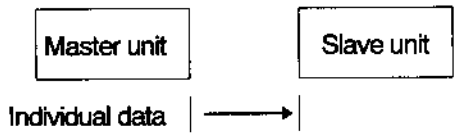

- Transmission/reception of exclusive data can be enabled or disabled by the Input&Output Filter setting of the MIDI settings.

■Sequence of data request communication

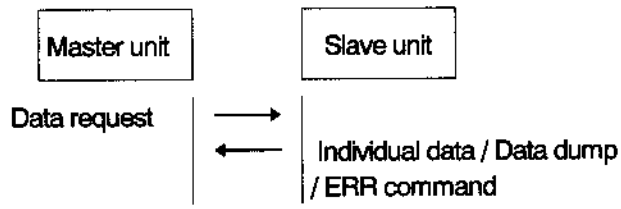

■Sequence of data dump communication

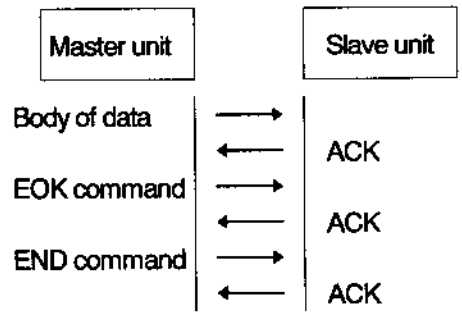

Data dump is possible only while the SYSEX BULK DUMP display is selected during MIDI function setting.

In the WSA1/WSA1R, data is divided into five types: TOTAL KEYBOARD, PANEL MEMORY, SOUND MEMORY, COMPOSER, and SEQUENCER.

After the above handshake routine is concluded and communication link is established, the various kinds of data are respectively transmitted as described below,
For one-way transmission, the transmission interval between packets is more than 50 msec.

The number of bytes in one exclusive packet is 256. In a transmission where the number of bytes exceeds one packet, the continuing data is transmitted in the continuing data(CMD=CDD) format,

●Panel

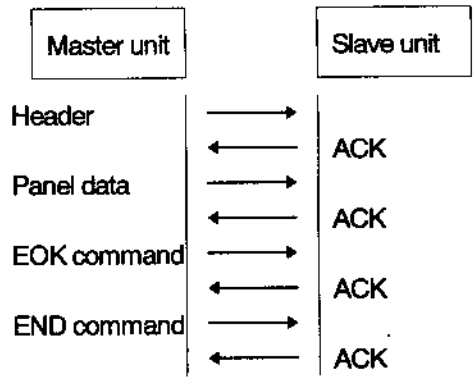

●Sound

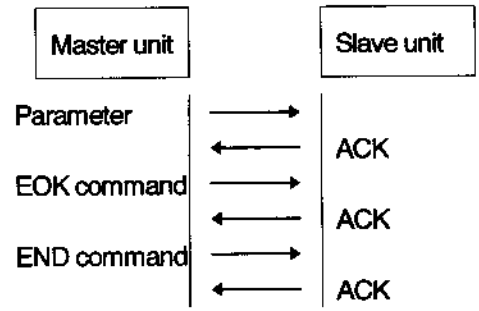

●Combination

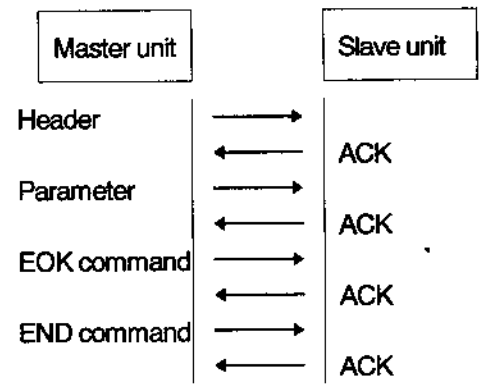

●Sequencer data

Master unit		Slave unit
Location	→	
	←	ACK
Header	→	
	←	ACK
Performance	→	
	←	ACK
EOK command	→	
	←	ACK
END command	→	
	←	ACK

●All data

Master unit		Slave unit
[PANEL]		
Header	→	
	←	ACK
Panel data	→	
	←	ACK
EOK command	→	
	←	ACK
[SOUND]		
parameter	→	
	←	ACK
EOK command	→	
	←	ACK
[COMBINATION]		
Header	→	
	←	ACK
Parameter	→	
	←	ACK
EOK command	→	
	←	ACK
[SEQUENCER]		
Location	→	
	←	ACK
Header	→	
	←	ACK
Performance	→	
	←	ACK
EOK command	→	
	←	ACK
END command	→	
	←	ACK
	←	ACK

■The form of the transmission message.

Function	SOX =F0H	IDC =50H	CMD	PC =04H	MD =00H	VER =11H	[data] ADR	SIZ	DT	CN	SM	EOX =F7H
Hand Shake Request	SOX	IDC	HRQ	PC	MD	VER	-	-	-	-	-	EOX
Hand Shake Return	SOX	IDC	HRT	PC	MD	VER	-	-	-	-	-	EOX
Acknowledge	SOX	IDC	ACK	DMY	-	-	-	-	-	-	-	EOX
Negative Acknowledge	SOX	IDC	NAK	DMY	-	-	-	-	-	-	-	EOX
End of Block	SOX	IDC	EOK	DMY	-	-	-	-	-	-	-	EOX
End	SOX	IDC	END	DMY	-	-	-	-	-	-	-	EOX
Error	SOX	IDC	ERR	DMY	-	-	-	-	-	-	-	EOX
Memory full	SOX	IDC	FUL	DMY	-	-	-	-	-	-	-	EOX
Tempo data	SOX	IDC	TMP	-	-	-	-	-	DT	-	-	EOX
Data request	SOX	IDC	DRQ	PC	MD	VER	ADR	SIZ	-	CN	SM	EOX
Individual data	SOX	IDC	ITR	PC	MD	VER	ADR	SIZ	DT	CN	SM	EOX
Data dump												
Sound Memory parameter	SOX	IDC	BTR	PC	MD	VER	ADR	SIZ	DT	CN	SM	EOX
Panel												
header	SOX	IDC	BTR	PC	MD	VER	ADR	SIZ	DT	CN	SM	EOX
panel data	SOX	IDC	BTR	PC	MD	VER	ADR	SIZ	DT	CN	SM	EOX
Combination												
location	SOX	IDC	BTR	PC	MD	VER	ADR	SIZ	DT	CN	SM	EOX
combination	SOX	IDC	BTR	PC	MD	VER	ADR	SIZ	DT	CN	SM	EOX
Sequencer												
location	SOX	IDC	BTR	PC	MD	VER	ADR	SIZ	DT	CN	SM	EOX
header	SOX	IDC	BTR	PC	MD	VER	ADR	SIZ	DT	CN	SM	EOX
performance	SOX	IDC	BTR	PC	MD	VER	ADR	SIZ	DT	CN	SM	EOX
Continuing data	SOX	IDC	COD	-	-	-	-	-	DT	CN	SM	EOX

■MIDI exclusive address map

ADDRESS (Hex) ADR MSB~LSB	ADDRESS (21bit)	Area	Subarea	Sub-subarea
00 00 00~	000000H~	SYSTEM		REAL TIME
00 08 00~	000400H~			NON-REAL TIME
00 10 00~	000800H~	PART	COMMON	REAL TIME
00 18 00~	000C00H~			NON-REAL TIME
00 20 00~	001000H~	PART	INDIVIDUAL	PART1 REAL TIME
00 20 40~	001040H~			PART1 NON-REAL TIME
00 21 00~	001080H~			PART2 REAL TIME
00 21 40~	0010C0H~			PART2 NON-REAL TIME
:	:			
00 nn 00~	:			PARTn REAL TIME
00 nn 40~	:			PARTn NON-REAL TIME
:	:			
00 3F 00~	001F80H~			PART32 REAL TIME
00 3F 40~	001FC0H~			PART32 NON-REAL TIME
00 60 00~	003000H~	PART	SPECIAL	REAL TIME
00 68 00~	003400H~			NON-REAL TIME
10 00 00~	040000H~	NORMAL SOUND	INDIVIDUAL	REAL TIME
18 00 00~	060000H~	DRUM SOUND	INDIVIDUAL	REAL TIME
20 00 00~	080000H~	SOUND MEMORY	TOTAL	NON-REAL TIME
40 00 00~	100000H~	PANEL	HEADER	NON-REAL TIME
40 00 20~	100020H~		PANEL DATA	NON-REAL TIME
50 00 00~	140000H~	COMBINATION	HEADER	NON-REAL TIME
			COMBINATION DATA	NON-REAL TIME
60 00 00~	180000H~	SEQUENCER	LOCATION	NON-REAL TIME
			HEADER	NON-REAL TIME
			PERFORMANCE	NON-REAL TIME

■ SIZ of data dump area

SIZ MSB LSB	Area	Subarea
10 00 00	SOUND MEMORY	PARAMETER
00 00 20	PANEL	HEADER
00 12 60		PANEL DATA
00 06 00	COMBINATION	HEADER
05 40 00		COMBINATION DATA
00 18 00	SEQUENCER	LOCATION
01 70 00		HEADER
Variable		PERFORMANCE

■ ADR of data request concerns the data dump

SIZ MSB LSB	Area
20 00 00	SOUND MEMORY
40 00 00	PANEL
50 00 00	COMBINATION
60 00 00	SEQUENCER

SEQUENCER : WSA1 only

SYSTEM AND PART PARAMETER

ADR(HEX) MSB	ADR(HEX) LSB	SIZ(HEX) MSB	SIZ(HEX) LSB	PARAMETER	DATA(HEX) RANGE	DESCRIPTION	NOTE *1
SYSTEM REAL TIME							
00 00 00		00 00 01		SOUND MEMORY PROTECT	00-01	00:OFF , 01:ON	QR
00 00 01		00 00 01		COMBINATION MEMORY PROTECT	00-01	00:OFF , 01:ON	QR
00 00 08		00 00 01		MASTER TUNING	00-00-3F	427.3-440.0-453.0	QR
00 00 10		00 00 01		VELOCITY CURVE	00-09	0-9	QR
00 00 11		00 00 01		VELOCITY OFFSET	00-7F	0-127	QR
00 00 12		00 00 01		AFTER TOUCH CURVE	00-0A	0-10	QR
00 00 13		00 00 01		AFTER TOUCH THRESHOLD	00-7F	0-127	QR
00 00 20		00 00 01		DRUMS MAP SELECT	00-40-42	00:NORMAL 40:USER1 41:USER2 42:USER3	QR
				DATA LOAD FILTER			QR
				OVERALL			
00 00 30		00 00 01		EFFECT&OUTPUT	00-02	00:OFF,01:COMBI,02:COMBI&SOUND	
00 00 31		00 00 01		REAL-TIME CREATOR 1-6	00-02	00:OFF,01:COMBI,02:COMBI&SOUND	
				COMBINATION			
00 00 32		00 00 01		OCTAVE	00-01	00:OFF,01:ON	
00 00 33		00 00 01		MIDI SETTING	00-01	00:OFF,01:ON	
00 00 34		00 00 01		KEY&VELOCITY LAYER	00-01	00:OFF,01:ON	
00 00 35		00 00 01		MAIN OUT EQUALIZER	00-01	00:OFF,01:ON	
00 00 36		00 00 01		KEY SCALING	00-01	00:OFF,01:ON	
00 00 40		00 00 02		COMBINATION NUMBER	00-7F	1-128	QR
				BANK	00-01	00:ROM , 01:USER	
00 01 00		00 00 01		MIDI INPUT MODE	00-02	00:MULTI,01:SINGLE,02:OMNI	QR
00 01 01		00 00 01		MIDI OUTPUT MODE	00-01	00:MULTI,01:SINGLE	QR
00 01 02		00 00 01		SINGLE CHANNEL	00-0F	1～16	QR
00 01 03		00 00 01		LOCAL TOTAL	00-01	00:OFF , 01:ON	QR
00 01 04		00 00 01		PROGRAM CHANGE MODE	00-01	00:NORMAL , 01:TECHNICS	QR
00 01 05		00 00 01		SINGLE CHANNEL PROGRAM CHANGE	00-01	00:SOUND , 01:COMBINATION	QR
SYSTEM NON-REAL TIME							
00 08 00		00 00 01		INITIAL	00-06	00:TOTAL 04:RE-MAP 01:PART SETTING 05:DRUMS MAP 02:SYSTEM 06:SEQUENCER 03:MIDI SETTING	R
00 08 08		00 00 01		PLAY MODE REQUEST	00-01	00:SOUND MODE REQUEST 01:COMBINATION MODE REQUEST .	R
00 08 10		00 00 01		COMBINATION WRITE REQUEST	00-7F	1-128	R
00 08 11		00 00 03		SOUND WRITE REQUEST PROG CHANGE & BANK	00-7F 00-3FFFF	1-128 1-16384	R

ADR(HEX) MSB	ADR(HEX) LSB	SIZ(HEX) MSB	SIZ(HEX) LSB	PARAMETER	DATA(HEX) RANGE	DESCRIPTION	NOTE *1
PART COMMON REAL TIME							
00 10 00		00 00 01		KEY TRANSPOSE	1C-40-64	-3oct～0～+3oct	QR
00 10 10		00 00 01		KEY SCALING MODE	00-01	00:TOTAL , 01:SOUND	QR
00 10 11		00 00 01		TOTAL KEY SCALING	00-80	00:OFF 14:ARABIC5 03:PYTHAGOREAN 15:SLENDRO 04:WERCKMEISTER 16:PELOG 05:KIRNBERGER 40:RANDOM 10:ARABIC1 41:PIANO 11:ARABIC2 42:ORCHESTRA 12:ARABIC3 80:USER 13:ARABIC4	QR
00 10 12		00 00 01		KEY SCALING SHIFT	00-08	Ckey～Bkey	QR
				KEY SCALING USER SETTINGS			
00 10 13		00 00 01		Ckey DETUNE SETTING	00-80-FF	-100～0～+100	QR
00 10 14		00 00 01		Dbkey DETUNE SETTING	00-80-FF	-100～0～+100	QR
:		:		:	:	:	:
00 10 1D		00 00 01		Bbkey DETUNE SETTING	00-80-FF	-100～0～+100	QR
00 10 1E		00 00 01		Bkey DETUNE SETTING	00-80-FF	-100～0～+100	QR
00 10 20		00 00 01		MAIN OUT EQUALIZER LOW-FREQ	00-11	40Hz～2KHz	QR
00 10 21		00 00 01		LOW-GAIN	00-18-30	-12.0dB,…,0dB,…,12.0dB	QR
00 10 22		00 00 01		HIGH-FREQ	11-1A	2KHz～16KHz	QR
00 10 23		00 00 01		HIGH-GAIN	00-18-30	-12.0dB,…,0dB,…,12.0dB	QR
				EFFECT COMMON			
00 11 00		00 00 01		ALGORITHM	00-01	00:PARALLEL , 01:SERIAL	QR
00 11 01		00 00 01		EFFECT1 OUTPUT SELECT	01-04	01:MAIN , 03:SUB2 02:SUB1 04:SUB3	QR
00 11 02		00 00 01		EFFECT2 OUTPUT SELECT	01-04	01:MAIN , 03:SUB2 02:SUB1 04:SUB3	QR
				EFFECT1		Refer to DSP EFFECT pages	QR
00 11 20		00 00 01		TYPE	--		
				PARAMETER			
00 11 21		00 00 01		VALUE1	--		
:		:		:	:		
00 11 34		00 00 01		VALUE20	--		
00 11 35		00 00 01		ANOTHER EFF SEND	--		
00 11 36		00 00 01		DYNAMIC CONTROL	--		
				EFFECT2		Refer to DSP EFFECT pages	QR
00 11 40		00 00 01		TYPE	--		
				PARAMETER			
00 11 41		00 00 01		VALUE1	--		
:		:		:	:		
00 11 54		00 00 01		VALUE20	--		
00 11 55		00 00 01		ANOTHER EFF SEND	--		
00 11 56		00 00 01		DYNAMIC CONTROL	--		
				REVERB		Refer to DSP EFFECT pages	QR
00 11 60		00 00 01		TYPE	--		
				PARAMETER			
00 11 61		00 00 01		VALUE1	--		
:		:		:	:		
00 11 74		00 00 01		VALUE20	--		
00 11 75		00 00 01		DYNAMIC CONTROL	--		
PART COMMON NON-REAL TIME							
00 18 00		-- -- --		(Reserved)	--		

ADR(HEX) MSB	ADR(HEX) LSB	SIZ(HEX) MSB	SIZ(HEX) LSB	PARAMETER	DATA(HEX) RANGE	DESCRIPTION	NOTE *1
PART INDIVIDUAL REAL TIME							
nn = 20 - 3F : PART NUMBER (PART1-PART32)							
00	nn	00	00 03	PROGRAM CHANGE	00-7F	0～127	QR
				& BANK	00-3FFFF	0～16383	
00	nn 03	00	00 01	VOLUME	00-7F	0～127	QR
00	nn 04	00	00 01	EFFECT1 SEND	00-7F	0～127	QR
00	nn 05	00	00 01	EFFECT2 ON/OFF	00-01	00:OFF , 01:ON	QR
00	nn 06	00	00 01	REVERB SEND	00-7F	0～127	QR
00	nn 07	00	00 01	PANPOT	00-7F	0～127	QR
00	nn 08	00	00 01	KEY SHIFT	1C-40-64	-36～0～+36	QR
00	nn 09	00	00 01	FINE TUNE	00-80-FF	-128～0～+127	QR
00	nn 0A	00	00 01	PITCH BEND RANGE	00-0C	0～12	QR
00	nn 10	00	00 01	ASSIGN MODE	00-01	00:POLY , 01:MONO	QR
00	nn 14	00	00 01	KEY SCALING	00-01	00:OFF , 01:ON	QR
00	nn 20	00	00 01	VELOCITY OFFSET	00-18-30	-24～0～+24	QR
00	nn 28	00	00 01	KEY LAYER LOW	00-3C-7F	C-2key～C3key～G8key	QR
00	nn 29	00	00 01	HIGH	00-3C-7F	C-2key～C3key～G8key	QR
00	nn 2A	00	00 01	VELOCITY LAYER LOW	00-7F	0～127	QR
00	nn 2B	00	00 01	HIGH	00-7F	0～127	QR
00	nn 30	00	00 01	MAIN OUT	00-01	00:OFF , 01:ON	QR
00	nn 31	00	00 01	SUB OUT	00-04	00:OFF , 02-04:SUB1-SUB3	QR
PART INDIVIDUAL NON-REAL TIME							
00	nn 40	00	00 01	LOCAL CONTROL	00-01	00:ON , 01:OFF	QR
00	nn 41	00	00 01	BASIC CHANNEL	00-1F	1-1～1-16,2-1～2-16	QR
00	nn 42	00	00 01	MIDI OUT SETTING	00-01	00:ON , 01:OFF	QR
00	nn 43	00	00 01	MIDI IN SETTING	00-01	00:ON , 01:OFF	QR
				MIDI INPUT FILTER			
00	nn 48	00	00 01	PROGRAM CHANGE	00-01	00:OFF , 01:ON	QR
00	nn 49	00	00 01	BANK SELECT	00-01	00:OFF , 01:ON	QR
00	nn 4A	00	00 01	VOLUME	00-01	00:OFF , 01:ON	QR
				MIDI OUTPUT FILTER			
00	nn 50	00	00 01	PROGRAM CHANGE	00-01	00:OFF , 01:ON	QR
00	nn 51	00	00 01	BANK SELECT	00-01	00:OFF , 01:ON	QR
00	nn 52	00	00 01	VOLUME	00-01	00:OFF , 01:ON	QR
00	nn 53	00	00 01	PANPOT	00-01	00:OFF , 01:ON	QR
00	nn 54	00	00 01	EFFECT DEPTH	00-01	00:OFF , 01:ON	QR
00	nn 55	00	00 01	PITCH BEND	00-01	00:OFF , 01:ON	QR
00	nn 56	00	00 01	MODULATION1	00-01	00:OFF , 01:ON	QR
00	nn 57	00	00 01	MODULATION2	00-01	00:OFF , 01:ON	QR
00	nn 58	00	00 01	REAL-TIME CREATOR-X	00-01	00:OFF , 01:ON	QR
00	nn 59	00	00 01	REAL-TIME CREATOR-Y	00-01	00:OFF , 01:ON	QR
00	nn 5A	00	00 01	REAL-TIME CONTROLLER-X	00-01	00:OFF , 01:ON	QR
00	nn 5B	00	00 01	REAL-TIME CONTROLLER-Y	00-01	00:OFF , 01:ON	QR
00	nn 5C	00	00 01	HOLD1	00-01	00:OFF , 01:ON	QR
00	nn 5D	00	00 01	CONTROL PEDAL	00-01	00:OFF , 01:ON	QR
00	nn 5E	00	00 01	AFTER TOUCH	00-01	00:OFF , 01:ON	QR
				MIDI MULTIPLE MESSAGES OUTPUT			
00	nn 60	00	00 01	PROGRAM CHANGE	00-81	0～127 , 128:OFF , 129:INT	QR
00	nn 61	00	00 02	BANK SELECT	00-4001	0-16383,16384:OFF, 16385:INT	QR
00	nn 63	00	00 01	VOLUME	00-81	0～127 , 128:OFF , 129:INT	QR
00	nn 64	00	00 01	PANPOT	00-81	0～127 , 128:OFF , 129:INT	QR
00	nn 65	00	00 01	REVERB DEPTH	00-81	0～127 , 128:OFF , 129:INT	QR
00	nn 66	00	00 01	CHORUS DEPTH	00-81	0～127 , 128:OFF , 129:INT	QR
00	nn 68	00	00 01	MIDI OUT KEY TRANSPOSE	1C-40-64	-36～0～+36	QR
				CONTROLLER INTERNAL FILTER			
00	nn 70	00	00 01	PITCH BEND	00-01	00:OFF , 01:ON	QR
00	nn 71	00	00 01	MODULATION1	00-01	00:OFF , 01:ON	QR
00	nn 72	00	00 01	MODULATION2	00-01	00:OFF , 01:ON	QR
00	nn 73	00	00 01	REAL-TIME CREATOR-X	00-01	00:OFF , 01:ON	QR
00	nn 74	00	00 01	REAL-TIME CREATOR-Y	00-01	00:OFF , 01:ON	QR
00	nn 75	00	00 01	REAL-TIME CONTROLLER-X	00-01	00:OFF , 01:ON	QR
00	nn 76	00	00 01	REAL-TIME CONTROLLER-Y	00-01	00:OFF , 01:ON	QR
00	nn 77	00	00 01	HOLD1	00-01	00:OFF , 01:ON	QR
00	nn 78	00	00 01	CONTROL PEDAL	00-01	00:OFF , 01:ON	QR
00	nn 79	00	00 01	AFTER TOUCH	00-01	00:OFF , 01:ON	QR

ADR(HEX) MSB	ADR(HEX) LSB	SIZ(HEX) MSB	SIZ(HEX) LSB	PARAMETER	DATA(HEX) RANGE	DESCRIPTION	NOTE *1
PART SPECIAL REAL TIME							
00	60 00	00	00 01	METRONOME VOLUME	00-7F	0～127	QR
PART SPECIAL NON-REAL TIME							
00	68 00	--	-- --	(Reserved)	--		

*1 Q: When Data Request is received, the relevant data is sent.
R: Data reception possible.

WSA NORMAL SOUND PARAMETER

OUTLINE OF NORMAL SOUND

NORMAL SOUND

- GENERAL DATA
- 1ST TONE DATA
- 2ND TONE DATA
- 3RD TONE DATA
- 4TH TONE DATA
- 1ST MODELING DATA
- 2ND MODELING DATA
- 3RD MODELING DATA
- 4TH MODELING DATA

GENERAL DATA

PARAMETER No. (HEX)	SOUND PARAMETER	RANGE BIT	RANGE DATA (HEX)	RANGE DATA (DEC)	MEMO
	NAME				
000 ~ 00F	16 CHARACTER	BP6~0	20~7F	32~ 127	' '(SPACE)~'}'
	ATTRIBUTE				
	ATTRIBUTE FLAG				
010	PARAMETER MODE	BP7~6	00~00	0~ 3	0:NORMAL MODE FIXED
011	TONE ON/OFF	BP7~0	→	→	0:OFF,1:ON ON/OFF ON/OFF ON/OFF ON/OFF BP7 BP6 BP5 BP4 BP3 BP2 BP1 BP0 4TH 3RD 2ND 1ST
012	KEY ON MODE	BP7~0	→	→	PRONOUNCE OF METHOD 0:KEY ON, 1:KEY OFF, 2:LEGATO, 3:NON LEGATO BP7 BP6 BP5 BP4 BP3 BP2 BP1 BP0 4TH 3RD 2ND 1ST
013	KEY SCALING	BP7~0	00~42	0 ~ 66	0:OFF, 1~22:SCALING OF OCTAVE, 64~66:SCALING OF ALL KEY
	CONTROLLERS				
	PITCH BEND				
014	ON/OFF,PHASE	BP7~0	→	→	ON/OFF(0:OFF,1:ON)/PHASE(0:ON,1:INVERSE) PHASE ON/OF PHASE ON/OF PHASE ON/OF PHASE ON/OF BP7 BP6 BP5 BP4 BP3 BP2 BP1 BP0 4TH 3RD 2ND 1ST
015	FUNCTION SELECT	BP6~0	00~7F	0~ 127	→ Refer to REMARK 1 Don't edit MSB parameter
016	DEPTH	BP6~0	00~7F	0~ 127	64:STANDARD
	MODULATION WHEEL 1				
	SELECT1				
017 ~ 019	(SAME OF THE ABOVE)				
	SELECT2				
01A ~ 01C	(SAME OF THE ABOVE)				
	MODULATION WHEEL 2				
	SELECT1				
01D ~ 01F	(SAME OF THE ABOVE)				
	SELECT2				
020 ~ 022	(SAME OF THE ABOVE)				
	REALTIME CREATOR				0:OFF,1:ON
023	BOX SELECT	BP6~0	→	→	BP0:BOX1,BP1:BOX2,BP2:BOX3,BP3:BOX4,BP4:BOX5,BP5:BOX6
	REALTIME CONTROLLER				0:OFF,1:ON
024	BOX SELECT	BP6~0	→	→	BP0:BOX1,BP1:BOX2,BP2:BOX3,BP3:BOX4,BP4:BOX5,BP5:BOX6
	CONTROL PEDAL				
	SELECT1				
025 ~ 027	(SAME OF THE ABOVE)				
	SELECT2				
028 ~ 02A	(SAME OF THE ABOVE)				
	AFTER TOUCH				
	SELECT1				
02B ~ 02D	(SAME OF THE ABOVE)				
	SELECT2				
02E ~ 030	(SAME OF THE ABOVE)				
	BOX SELECT				
	CONTROLLER BOX1 X				
031 ~ 033	(SAME OF THE ABOVE)				
	CONTROLLER BOX1 Y				
034 ~ 036	(SAME OF THE ABOVE)				
	CONTROLLER BOX2 X				
037 ~ 039	(SAME OF THE ABOVE)				
	CONTROLLER BOX2 Y				
03A ~ 03C	(SAME OF THE ABOVE)				
	CONTROLLER BOX3 X				
03D ~ 03F	(SAME OF THE ABOVE)				
	CONTROLLER BOX3 Y				
040 ~ 042	(SAME OF THE ABOVE)				
	CONTROLLER BOX4 X				
043 ~ 045	(SAME OF THE ABOVE)				
	CONTROLLER BOX4 Y				
046 ~ 048	(SAME OF THE ABOVE)				
	CONTROLLER BOX5 X				
049 ~ 04B	(SAME OF THE ABOVE)				
	CONTROLLER BOX5 Y				
04C ~ 04E	(SAME OF THE ABOVE)				
	CONTROLLER BOX6 X				
04F ~ 051	(SAME OF THE ABOVE)				
	CONTROLLER BOX6 Y				
052 ~ 054	(SAME OF THE ABOVE)				
	PITCH				
055	OCTAVE SHIFT	BP3~0	06~0A	6~ 11	6h:-2oct,7h:-1oct,8h:0oct,9h:+1oct,Ah:+2oct
056	(RESERVE)	—	—	—	
	LFO BOX1				
057	DEPTH	BP6~0	00~7F	0~ 127	
058	SPEED	BP6~0	00~7F	0~ 127	
059	KEY SYNC	BP7	00~01	0~ 1	0:KEY ON SYNC OFF, 1:KEY ON SYNC ON
	TOUCH DEPTH	BP5~0	00~32	0~ 50	
05A	WAVE	BP7~6	00~03	0~ 3	0:SINE, 1:TRIANGLE, 2:SQUARE, 3:SAW TOOTH
	DELAY	BP4~0	00~1E	0~ 30	
	LFO BOX2				
05B	DEPTH	BP6~0	00~7F	0~ 127	
05C	SPEED	BP6~0	00~7F	0~ 127	
05D	KEY SYNC	BP7	00~01	0~ 1	0:KEY ON SYNC OFF, 1:KEY ON SYNC ON
	TOUCH DEPTH	BP5~0	00~32	0~ 50	
05E	WAVE	BP7~6	00~03	0~ 3	0:SINE, 1:TRIANGLE, 2:SQUARE, 3:SAW TOOTH
	DELAY	BP4~0	00~1E	0~ 30	
	LFO BOX3				
05F	DEPTH	BP6~0	00~7F	0~ 127	
060	SPEED	BP6~0	00~7F	0~ 127	
061	KEY SYNC	BP7	00~01	0~ 1	0:KEY ON SYNC OFF, 1:KEY ON SYNC ON
	TOUCH DEPTH	BP5~0	00~32	0~ 50	
062	WAVE	BP7~6	00~03	0~ 3	0:SINE, 1:TRIANGLE, 2:SQUARE, 3:SAW TOOTH
	DELAY	BP4~0	00~1E	0~ 30	
	LFO BOX4				
063	DEPTH	BP6~0	00~7F	0~ 127	
064	SPEED	BP6~0	00~7F	0~ 127	
065	KEY SYNC	BP7	00~01	0~ 1	0:KEY ON SYNC OFF, 1:KEY ON SYNC ON
	TOUCH DEPTH	BP5~0	00~32	0~ 50	
066	WAVE	BP7~6	00~03	0~ 3	0:SINE, 1:TRIANGLE, 2:SQUARE, 3:SAW TOOTH
	DELAY	BP4~0	00~1E	0~ 30	
	LEVEL				

	LFO BOX1				
067	DEPTH	BP6~0	00~7F	0~ 127	
068	SPEED	BP6~0	00~7F	0~ 127	
069	KEY SYNC	BP7	00~01	0~ 1	0:KEY ON SYNC OFF, 1:KEY ON SYNC ON
	TOUCH DEPTH	BP5~0	00~32	0~ 50	
06A	WAVE	BP7~6	00~03	0~ 3	0:SINE, 1:TRIANGLE, 2:SQUARE, 3:SAW TOOTH
	DELAY	BP4~0	00~1E	0~ 30	
	LFO BOX2				
06B	DEPTH	BP6~0	00~7F	0~ 127	
06C	SPEED	BP6~0	00~7F	0~ 127	
06D	KEY SYNC	BP7	00~01	0~ 1	0:KEY ON SYNC OFF, 1:KEY ON SYNC ON
	TOUCH DEPTH	BP5~0	00~32	0~ 50	
06E	WAVE	BP7~6	00~03	0~ 3	0:SINE, 1:TRIANGLE, 2:SQUARE, 3:SAW TOOTH
	DELAY	BP4~0	00~1E	0~ 30	
	LFO BOX3				
06F	DEPTH	BP6~0	00~7F	0~ 127	
070	SPEED	BP6~0	00~7F	0~ 127	
071	KEY SYNC	BP7	00~01	0~ 1	0:KEY ON SYNC OFF, 1:KEY ON SYNC ON
	TOUCH DEPTH	BP5~0	00~32	0~ 50	
072	WAVE	BP7~6	00~03	0~ 3	0:SINE, 1:TRIANGLE, 2:SQUARE, 3:SAW TOOTH
	DELAY	BP4~0	00~1E	0~ 30	
	LFO BOX4				
073	DEPTH	BP6~0	00~7F	0~ 127	
074	SPEED	BP6~0	00~7F	0~ 127	
075	KEY SYNC	BP7	00~01	0~ 1	0:KEY ON SYNC OFF, 1:KEY ON SYNC ON
	TOUCH DEPTH	BP5~0	00~32	0~ 50	
076	WAVE	BP7~6	00~03	0~ 3	0:SINE, 1:TRIANGLE, 2:SQUARE, 3:SAW TOOTH
	DELAY	BP4~0	00~1E	0~ 30	
	FILTER				
	LFO BOX1				
077	DEPTH	BP6~0	00~7F	0~ 127	
078	SPEED	BP6~0	00~7F	0~ 127	
079	KEY SYNC	BP7	00~01	0~ 1	0:KEY ON SYNC OFF, 1:KEY ON SYNC ON
	TOUCH DEPTH	BP5~0	00~32	0~ 50	
07A	WAVE	BP7~6	00~03	0~ 3	0:SINE, 1:TRIANGLE, 2:SQUARE, 3:SAW TOOTH
	DELAY	BP4~0	00~1E	0~ 30	
	LFO BOX2				
07B	DEPTH	BP6~0	00~7F	0~ 127	
07C	SPEED	BP6~0	00~7F	0~ 127	
07D	KEY SYNC	BP7	00~01	0~ 1	0:KEY ON SYNC OFF, 1:KEY ON SYNC ON
	TOUCH DEPTH	BP5~0	00~32	0~ 50	
07E	WAVE	BP7~6	00~03	0~ 3	0:SINE, 1:TRIANGLE, 2:SQUARE, 3:SAW TOOTH
	DELAY	BP4~0	00~1E	0~ 30	
	LFO BOX3				
07F	DEPTH	BP6~0	00~7F	0~ 127	
080	SPEED	BP6~0	00~7F	0~ 127	
081	KEY SYNC	BP7	00~01	0~ 1	0:KEY ON SYNC OFF, 1:KEY ON SYNC ON
	TOUCH DEPTH	BP5~0	00~32	0~ 50	
082	WAVE	BP7~6	00~03	0~ 3	0:SINE, 1:TRIANGLE, 2:SQUARE, 3:SAW TOOTH
	DELAY	BP4~0	00~1E	0~ 30	
	LFO BOX4				
083	DEPTH	BP6~0	00~7F	0~ 127	
084	SPEED	BP6~0	00~7F	0~ 127	
085	KEY SYNC	BP7	00~01	0~ 1	0:KEY ON SYNC OFF, 1:KEY ON SYNC ON
	TOUCH DEPTH	BP5~0	00~32	0~ 50	
086	WAVE	BP7~6	00~03	0~ 3	0:SINE, 1:TRIANGLE, 2:SQUARE, 3:SAW TOOTH
	DELAY	BP4~0	00~1E	0~ 30	
	MIXER				
	OUTPUT SELECT				0:NO OUTPUT, 1:MAIN, 2:SUB1, 3:SUB2, 4:SUB3, 5:EFFECT2
087	MAIN	BP3~0	00~05	0~ 5	
	SUB	BP7~4	00~05	0~ 5	
	EFFECT SEND VOLUME				
088	EFFECT1	BP6~0	00~7F	0~ 127	
089	REVERB	BP6~0	00~7F	0~ 127	
	EFFECT OUTPUT SEL				1:MAIN, 2:SUB1, 3:SUB2, 4:SUB3
08A	EFFECT1	BP3~0	01~04	1~ 4	
	EFFECT2	BP7~4	01~04	1~ 4	

	DSP EFFECT				
	COMMON				
08B	ALGORITHM	BP0	00~01	0~ 1	0:SERIAL, 1:PARRALLEL
	EFFECT1				Refer to DSP EFFECT pages
08C	TYPE		~	~	
	PARAMETER				
08D	VALUE1		~	~	
08E	VALUE2		~	~	
08F	VALUE3		~	~	
090	VALUE4		~	~	
091	VALUE5		~	~	
092	VALUE6		~	~	
093	VALUE7		~	~	
094	VALUE8		~	~	
095	VALUE9		~	~	
096	VALUE10		~	~	
097	VALUE11		~	~	
098	VALUE12		~	~	
099	VALUE13		~	~	
09A	VALUE14		~	~	
09B	VALUE15		~	~	
09C	VALUE16		~	~	
09D	VALUE17		~	~	
09E	VALUE18		~	~	
09F	VALUE19		~	~	
0AD	VALUE20		~	~	
0A1	ANOTHER EFF SEND		~	~	
0A2	DYNAMIC CONTROL		~	~	
	EFFECT2				Refer to DSP EFFECT pages
0A3	TYPE		~	~	
	PARAMETER				
0A4	VALUE1		~	~	
0A5	VALUE2		~	~	
0A6	VALUE3		~	~	
0A7	VALUE4		~	~	
0A8	VALUE5		~	~	
0A9	VALUE6		~	~	
0AA	VALUE7		~	~	
0AB	VALUE8		~	~	
0AC	VALUE9		~	~	
0AD	VALUE10		~	~	
0AE	VALUE11		~	~	
0AF	VALUE12		~	~	
0B0	VALUE13		~	~	
0B1	VALUE14		~	~	
0B2	VALUE15		~	~	
0B3	VALUE16		~	~	
0B4	VALUE17		~	~	
0B5	VALUE18		~	~	
0B6	VALUE19		~	~	
0B7	VALUE20		~	~	
0B8	ANOTHER EFF SEND		~	~	
0B9	DYNAMIC CONTROL		~	~	
	REVERB				Refer to DSP EFFECT pages
0BA	TYPE		~	~	
	PARAMETER				
0BB	VALUE1		~	~	
0BC	VALUE2		~	~	
0BD	VALUE3		~	~	
0BE	VALUE4		~	~	
0BF	VALUE5		~	~	
0C0	VALUE6		~	~	
0C1	VALUE7		~	~	
0C2	VALUE8		~	~	
0C3	VALUE9		~	~	
0C4	VALUE10		~	~	
0C5	VALUE11		~	~	

0C6	VALUE12		~	~	
0C7	VALUE13		~	~	
0C8	VALUE14		~	~	
0C9	VALUE15		~	~	
0CA	VALUE16		~	~	
0CB	VALUE17		~	~	
0CC	VALUE18		~	~	
0CD	VALUE19		~	~	
0CE	VALUE20		~	~	
0CF	DYNAMIC CONTROL		~	~	
	DIGITAL EFFECT				
	MODE				
0D0	ON/OFF	BP7	00~01	0~ 1	0:OFF, 1:ON
	PAN	BP6	00~01	0~ 1	0:MONO, 1:STEREO
	EFFECT TYPE	BP3~0	00~0B	0~ 11	0:CELESTE1, 1:CELESTE2, 2:CHORUS1, 3:CHORUS2, 4:ENSEMBLE1, 5:ENSEMBLE2, 6:TREMOLO, 7:ORGAN TREMOLO, 8:SINGLE DELAY, 9:REPEAT DELAY, 10:SOLO EFFECT1, 11:SOLO EFFECT2
0D1	VALUE1		~	~	
0D2	VALUE2		~	~	
0D3	VALUE3		~	~	
0D4	VALUE4		~	~	
0D5	VALUE5		~	~	
0D6	VALUE6		~	~	
0D7	VALUE7		~	~	
0D8	VALUE8		~	~	

TONE DATA (1st、2nd、3rd、4th)

PARAMETER No. (HEX) 1st	2nd	3rd	4th	SOUND PARAMETER	RANGE BIT	DATA (HEX)	DATA (DEC)	MEMO
				ATTRIBUTE				
0D9	12A	17B	1CC	DELAY	BP5~0	00~32	0~ 50	0:DELAY OFF
0DA	12B	17C	1CD	PANNING	BP7~0	00~80	0~ 128	0~127:FIXED PAN, 128:RANDOM PAN
				TONE SELECT				
0DB	12C	17D	1CE	TTN SELECT	BP6~0	00~7F	0~ 127	
0DC	12D	17E	1CF	TONE KIND	BP7~6	00~03	0~ 3	0:NORMAL, 1:DRUM, 2:ATTACK
				TONE LOCATION	BP5~4	00~03	0~ 3	0:INTERNAL ROM, 1:INTERNAL RAM, 2:EXTERNAL ROM
				BANK SELECT	BP3~0	00~0F	0~ 15	
				PITCH				
0DD	12E	17F	1D0	KEY SHIFT	BP7~0	E8~18	- 24~+ 24	
0DE	12F	180	1D1	DETUNE	BP7~0	80~7F	-128~+127	
				BOX CONTROL				
0DF	130	181	1D2	LFO-FM1				
				BOX SELECT	BP7~6	00~03	0~ 3	0:LFO BOX1, 1:LFO BOX2, 2:LFO BOX3, 3:LFO BOX4
				ON/OFF	BP5	00~01	0~ 1	0:OFF, 1:ON
				PHASE	BP4	00~01	0~ 1	1:INVERSE
				SCALE SELECT	BP2~0	00~07	0~ 7	0:1/1, 1:1/2, 2:1/4, 3:1/8, 4:1/16, 5:1/32, 6:1/64,7:FIX
				ENVELOPE BOX				
				SHAPE				
0E0	131	182	1D3	TOTAL DEPTH	BP7~0	CE~32	- 50~+ 50	
0E1	132	183	1D4	START PITCH	BP7~0	CE~32	- 50~+ 50	
0E2	133	184	1D5	ATTACK TIME	BP6~0	00~64	0~ 100	
0E3	134	185	1D6	PEAK LEVEL	BP7~0	CE~32	- 50~+ 50	
0E4	135	186	1D7	DECAY1 TIME	BP6~0	00~64	0~ 100	
0E5	136	187	1D8	SUSTAIN1 LEVEL	BP7~0	CE~32	- 50~+ 50	
0E6	137	188	1D9	DECAY2 TIME	BP6~0	00~64	0~ 100	
0E7	138	189	1DA	SUSTAIN2 LEVEL	BP7~0	CE~32	- 50~+ 50	
0E8	139	18A	1DB	RELEASE TIME	BP6~0	00~64	0~ 100	
0E9	13A	18B	1DC	STOP PITCH	BP7~0	CE~32	- 50~+ 50	
				TOUCH FOLLOW				
0EA	13B	18C	1DD	ADR TIME	BP7~0	CE~32	- 50~+ 50	
0EB	13C	18D	1DE	DEPTH	BP7~0	CE~32	- 50~+ 50	
				KEY FOLLOW				
0EC	13D	18E	1DF	CENTER KEY	BP6~0	00~7F	0~ 127	
0ED	13E	18F	1E0	ATTACK SLOPE	BP7~0	CE~32	- 50~+ 50	
0EE	13F	190	1E1	DECAY SLOPE	BP7~0	CE~32	- 50~+ 50	
0EF	140	191	1E2	RELEASE SLOPE	BP7~0	CE~32	- 50~+ 50	
				LEVEL				
0F0	141	192	1E3	VOLUME	BP6~0	00~7F	0~ 127	1step 0.375[dB]
0F1	142	193	1E4	TOUCH DEPTH	BP7~0	CE~32	- 50~+ 50	
0F2	143	194	1E5	TOUCH CURVE	BP7~5	00~06	0~ 6	0:-3curve, 1:-2curve, 2:-1curve, 3:0curve, 4:+1curve, 5:+2curve, 6:+3curve
				KEY FOLLOW				
0F3	144	195	1E6	CENTER KEY	BP6~0	00~7F	0~ 127	
0F4	145	196	1E7	LOW KEY LIMIT	BP6~0	00~7F	0~ 127	
0F5	146	197	1E8	HIGH KEY LIMIT	BP6~0	00~7F	0~ 127	
0F6	147	198	1E9	SLOPE	BP7~0	CE~32	- 50~+ 50	
				LAYER				
				KEY RANGE				
0F7	148	199	1EA	LOW KEY SELECT	BP6~0	00~7F	0~ 127	↑LEVEL KEY→
0F8	149	19A	1EB	LOW FADE	BP6~0	00~7F	0~ 127	
0F9	14A	19B	1EC	HIGH KEY SELECT	BP6~0	00~7F	0~ 127	LOW KEY HIGH KEY
0FA	14B	19C	1ED	HIGH FADE	BP6~0	00~7F	0~ 127	LOW FADE HIGH FADE
				VELOCITY RANGE				
0FB	14C	19D	1EE	LOW VEL SELECT	BP6~0	00~7F	0~ 127	↑LEVEL VELOCITY→
0FC	14D	19E	1EF	LOW FADE	BP6~0	00~7F	0~ 127	
0FD	14E	19F	1F0	HIGH VEL SELECT	BP6~0	00~7F	0~ 127	LOW VEL HIGH VEL
0FE	14F	1A0	1F1	HIGH FADE	BP6~0	00~7F	0~ 127	LOW FADE HIGH FADE
				BOX CONTROL				
0FF	150	1A1	1F2	LFO-AM				
				BOX SELECT	BP7~6	00~03	0~ 3	0:LFO BOX1, 1:LFO BOX2, 2:LFO BOX3, 3:LFO BOX4
				ON/OFF	BP5	00~01	0~ 1	0:OFF, 1:ON
				PHASE	BP4	00~01	0~ 1	1:INVERSE
				ENVELOPE BOX				
				SHAPE				
100	151	1A2	1F3	ATTACK TIME	BP6~0	00~64	0~ 100	
101	152	1A3	1F4	PEAK LEVEL	BP6~0	00~64	0~ 100	
102	153	1A4	1F5	DECAY1 TIME	BP6~0	00~64	0~ 100	
103	154	1A5	1F6	SUSTAIN1 LEVEL	BP6~0	00~64	0~ 100	
104	155	1A6	1F7	DECAY2 TIME	BP6~0	00~64	0~ 100	
105	156	1A7	1F8	SUSTAIN2 LEVEL	BP6~0	00~64	0~ 100	
106	157	1A8	1F9	RELEASE TIME	BP6~0	00~64	0~ 100	
				TOUCH FOLLOW				
107	158	1A9	1FA	ATTACK	BP7~0	CE~32	- 50~+ 50	
108	159	1AA	1FB	DECAY	BP7~0	CE~32	- 50~+ 50	
				KEY FOLLOW				
109	15A	1AB	1FC	CENTER KEY	BP6~0	00~7F	0~ 127	
10A	15B	1AC	1FD	LOW KEY LIMIT	BP6~0	00~7F	0~ 127	
10B	15C	1AD	1FE	HIGH KEY LIMIT	BP6~0	00~7F	0~ 127	
10C	15D	1AE	1FF	ATTACK SLOPE	BP7~0	CE~32	- 50~+ 50	
10D	15E	1AF	200	DECAY SLOPE	BP7~0	CE~32	- 50~+ 50	
10E	15F	1B0	201	RELEASE SLOPE	BP7~0	CE~32	- 50~+ 50	
				FILTER				
10F	160	1B1	202	MODE	BP2~0	00~06	0~ 6	0:THROUGH, 1:LPF12+EQ, 2:HPF12+EQ, 3:LPF24, 4:HPF24, 5:BPF
				TOUCH CURVE	BP7~5	00~06	0~ 6	0:-3curve, 1:-2curve, 2:-1curve, 3:0curve, 4:+1curve, 5:+2curve, 6:+3curve
110	161	1B2	203	TOUCH DEPTH	BP5~0	00~32	0~ 50	
				LFO-FCM				
111	162	1B3	204	BOX SELECT	BP7~6	00~03	0~ 3	0:LFO BOX1, 1:LFO BOX2, 2:LFO BOX3, 3:LFO BOX4
				ON/OFF	BP5	00~01	0~ 1	0:OFF,1:ON
				PHASE	BP4	00~01	0~ 1	1:INVERSE
				KEY FOLLOW				
112	163	1B4	205	CENTER KEY	BP6~0	00~7F	0~ 127	
113	164	1B5	206	LOW KEY LIMIT	BP6~0	00~7F	0~ 127	
114	165	1B6	207	HIGH KEY LIMIT	BP6~0	00~7F	0~ 127	

115	166	187	208	SLOPE	BP7~0	CE~32	- 50~+ 50	
				ENVELOPE BOX				
				SHAPE				
116	167	1B8	209	CUTOFF ADJUST	BP7~0	CE~32	- 50~+ 50	
117	168	1B9	20A	START POINT	BP7~0	CE~32	- 50~+ 50	
118	169	1BA	20B	ATTACK TIME	BP6~0	00~64	0~ 100	
119	16A	1BB	20C	PEAK LEVEL	BP7~0	CE~32	- 50~+ 50	
11A	16B	1BC	20D	DECAY1 TIME	BP6~0	00~64	0~ 100	
11B	16C	1BD	20E	SUSTAIN1 LEVEL	BP7~0	CE~32	- 50~+ 50	
11C	16D	1BE	20F	DECAY2 TIME	BP6~0	00~64	0~ 100	
11D	16E	1BF	210	SUSTAIN2 LEVEL	BP7~0	CE~32	- 50~+ 50	
11E	16F	1C0	211	RELEASE TIME	BP6~0	00~64	0~ 100	
11F	170	1C1	212	STOP POINT	BP7~0	CE~32	- 50~+ 50	
				TOUCH FOLLOW				
120	171	1C2	213	ADR TIME	BP7~0	CE~32	- 50~+ 50	
121	172	1C3	214	DEPTH	BP7~0	CE~32	- 50~+ 50	
				KEY FOLLOW				
122	173	1C4	215	CENTER KEY	BP6~0	00~7F	0~ 127	
123	174	1C5	216	ATTACK SLOPE	BP7~0	CE~32	- 50~+ 50	
124	175	1C6	217	DECAY SLOPE	BP7~0	CE~32	- 50~+ 50	
125	176	1C7	218	RELEASE SLOPE	BP7~0	CE~32	- 50~+ 50	
				PARAMETER				→ Refer to REMARK 2
126	177	1C8	219	VALUE1		~	~	
127	178	1C9	21A	VALUE2		~	~	
128	179	1CA	21B	VALUE3		~	~	
129	17A	1CB	21C	VALUE4		~	~	

MODELING DATA (1st、2nd)

PARAMETER No. (HEX) 1st	2nd	—	—	SOUND PARAMETER	BIT	RANGE DATA (HEX)	(DEC)	MEMO
				DRIVER				
				THRESHOLD POINT				Threshold point of DRIVER WAVEFORM change
21D	248	273	29E	BETWEEN A AND B	BP6~0	00~7F	0~ 127	Provided that A < B < C < D
21E	249	274	29F	BETWEEN B AND C	BP6~0	00~7F	0~ 127	
21F	24A	275	2A0	BETWEEN C AND D	BP6~0	00~7F	0~ 127	
				DRIVER SELECT				
				DRIVER A				
220	24B	276	2A1	DRIVER TTN SELECT	BP6~0	00~7F	0~ 127	
221	24C	277	2A2	DRIVER KIND	BP7~6	00~03	0~ 3	0:NORMAL、1:DRUM、2:ATTACK
				DRIVER LOCATION	BP5~4	00~03	0~ 3	0:INTERNAL ROM、2:EXTERNAL ROM
				BANK SELECT	BP3~0	00~15	0~ 15	
				DRIVER B				
222	24D	278	2A3	DRIVER TTN SELECT	BP6~0	00~7F	0~ 127	
223	24E	279	2A4	DRIVER KIND	BP7~6	00~03	0~ 3	0:NORMAL、1:DRUM、2:ATTACK
				DRIVER LOCATION	BP5~4	00~03	0~ 3	0:INTERNAL ROM、2:EXTERNAL ROM
				BANK SELECT	BP3~0	00~15	0~ 15	
				DRIVER C				
224	24F	27A	2A5	DRIVER TTN SELECT	BP6~0	00~7F	0~ 127	
225	250	27B	2A6	DRIVER KIND	BP7~6	00~03	0~ 3	0:NORMAL、1:DRUM、2:ATTACK
				DRIVER LOCATION	BP5~4	00~03	0~ 3	0:INTERNAL ROM、2:EXTERNAL ROM
				BANK SELECT	BP3~0	00~15	0~ 15	
				DRIVER D				
226	251	27C	2A7	DRIVER TTN SELECT	BP6~0	00~7F	0~ 127	
227	252	27D	2A8	DRIVER KIND	BP7~6	00~03	0~ 3	0:NORMAL、1:DRUM、2:ATTACK
				DRIVER LOCATION	BP5~4	00~03	0~ 3	0:INTERNAL ROM、2:EXTERNAL ROM
				BANK SELECT	BP3~0	00~15	0~ 15	
				RESONATOR GENERAL				
				ATTRIBUTE				
228	253	27E	2A9	INTERACTION CONNECT	BP7~6	00~03	0~ 3	0:NO CONNECT、1:DUAL CONNECT、2:ALL CONNECT → Refer to REMARK 3
				RESONATOR TYPE	BP5~0	00~3F	0~ 63	0:ORIGINAL、1~63:PRESET RESONATOR
229	254	27F	2AA	(RESERVE)	—	—	—	
				POSITION PARAMETER				
22A	255	280	2AB	POSITION	BP7~0	00~FA	0~ 250	0.2% step、0~50%
22B	256	281	2AC	FORMANT FLAG	BP7	00~01	0~ 1	0:FIXED、1:MOVE
				DEPTH	BP6~0	00~7F	0~ 127	
22C	257	282	2AD	(RESERVE)	—	—	—	
22D	258	283	2AE	TOUCH	BP7~0	CE~32	- 50~+ 50	
				POSITION MOVEMENT				
22E	259	284	2AF	WIDTH	BP5~0	00~32	0~ 50	
22F	25A	285	2B0	SPEED	BP5~0	00~32	0~ 50	
				SAMPLE/HOLD	BP7	00~01	0~ 1	0:OFF、1:ON
				INTERACTION				
230	25B	286	2B1	GAIN	BP6~0	00~7F	0~ 127	
231	25C	287	2B2	(RESERVE)	—	—	—	
				MAIN RESONATOR				
				RESONATOR				
232	25D	288	2B3	RESONATOR MODE	BP7	00~01	0~ 1	0:POSITIVE FEEDBACK、1:NEGATIVE FEEDBACK
				FITTING	BP6~0	00~7F	0~ 127	
233	25E	289	2B4	RESONATOR SCALE	BP7	00~01	0~ 1	0:OFF、1:ON
				MUTING	BP6~0	00~7F	0~ 127	00~7F=80~00(00:-127、……、7F:0)
				TOUCH FOLLOW				
234	25F	28A	2B5	TOUCH FITTING	BP7~0	CE~32	- 50~+ 50	
235	260	28B	2B6	TOUCH MUTING	BP7~0	CE~32	- 50~+ 50	
				KEY FOLLOW				
236	261	28C	2B7	CENTER KEY	BP6~0	00~7F	0~ 127	CERTAINLY MSB=0 FIXED
237	262	28D	2B8	LOW KEY LIMIT	BP6~0	00~7F	0~ 127	
238	263	28E	2B9	HIGH KEY LIMIT	BP6~0	00~7F	0~ 127	
239	264	28F	2BA	SLOPE	BP7~0	CE~32	- 50~+ 50	
				PITCH				
23A	265	290	2BB	KEY SHIFT	BP7~0	C4~3C	-60~+ 60	
23B	266	291	2BC	DETUNE	BP7~0	80~7F	-128~+127	
				SUB RESONATOR				
				RESONATOR				
23C	267	292	2BD	RESONATOR MODE	BP7	00~01	0~ 1	0:POSITIVE FEEDBACK、1:NEGATIVE FEEDBACK
				FITTING	BP6~0	00~7F	0~ 127	
23D	268	293	2BE	RESONATOR SCALE	BP7	00~01	0~ 1	0:OFF、1:ON
				MUTING	BP6~0	00~7F	0~ 127	00~7F=80~00(00:-127、……、7F:0)
23E	269	294	2BF	SUB GAIN	BP7~0	9C~64	-100~+100	
				TOUCH FOLLOW				
23F	26A	295	2C0	TOUCH FITTING	BP7~0	CE~32	- 50~+ 50	
240	26B	296	2C1	TOUCH MUTING	BP7~0	CE~32	- 50~+ 50	
241	26C	297	2C2	TOUCH SUB GAIN	BP7~0	CE~32	- 50~+ 50	
				KEY FOLLOW				
242	26D	298	2C3	CENTER KEY	BP6~0	00~7F	0~ 127	CERTAINLY MSB=0 FIXED
243	66E	299	2C4	LOW KEY LIMIT	BP6~0	00~7F	0~ 127	
244	26F	29A	2C5	HIGH KEY LIMIT	BP6~0	00~7F	0~ 127	
245	270	29B	2C6	SLOPE	BP7~0	CE~32	- 50~+ 50	
				PITCH				
246	271	29C	2C7	KEY SHIFT	BP7~0	C4~3C	- 60~+ 60	
247	272	29D	2C8	DETUNE	BP7~0	80~7F	-128~+127	

REMARK

REMARK1 : CONTROL FUNCTION

No	CONTROL FUNCTION	No	CONTROL FUNCTION	No	CONTROL FUNCTION	No	CONTROL FUNCTION
00	OFF	10	PITCH LFO1 SPEED	20	POSITION MOVEMENT WIDTH	30	EFFECT2 DYNAMIC CONTROL
01	PITCH BEND	11	PITCH LFO2 SPEED	21	POSITION MOVEMENT SPEED	31	REVERB DYNAMIC CONTROL
02	SUSTAIN LEVEL	12	PITCH LFO3 SPEED	22	(RESERVE)		
03	FILTER CUTOFF FREQUENCY	13	PITCH LFO4 SPEED	23	*MUTING		32~7F : (RESERVE)
04	PITCH LFO1 DEPTH	14	AMP LFO1 SPEED	24	*RESONATOR KEYSHIFT		
05	PITCH LFO2 DEPTH	15	AMP LFO2 SPEED	25	SUB GAIN		
06	PITCH LFO3 DEPTH	16	AMP LFO3 SPEED	26	*DELAY		
07	PITCH LFO4 DEPTH	17	AMP LFO4 SPEED	27	*PANNING		
08	AMP LFO1 DEPTH	18	FILTER LFO1 SPEED	28	*EFFECT1 SEND		
09	AMP LFO2 DEPTH	19	FILTER LFO2 SPEED	29	*REVERB SEND		
0A	AMP LFO3 DEPTH	1A	FILTER LFO3 SPEED	2A	*LEVEL		
0B	AMP LFO4 DEPTH	1B	FILTER LFO4 SPEED	2B	*AMP ENV. ATTACK TIME		
0C	FILTER LFO1 DEPTH	1C	*FITTING	2C	*AMP ENV. DECAY TIME		
0D	FILTER LFO2 DEPTH	1D	POSITION	2D	*AMP ENV. RELEASE TIME		
0E	FILTER LFO3 DEPTH	1E	POSITION DEPTH	2E	*FILTER RESONANCE		
0F	FILTER LFO4 DEPTH	1F	(RESERVE)	2F	EFFECT1 DYNAMIC CONTROL		

ATTENTION * : This function not use AFTER TOUCH

REMARK 2 : FILTER PARAMETER(VALUE)

FILTER MODE	SOUND PARAMETER		RANGE BIT	DATA (HEX)	DATA (DEC)	MEMO
LPF12	VALUE1	FLT CUTOFF FREQUENCY	BP7~0	00~7F	0~ 127	
	VALUE2	FLT RESONANCE	BP2~0	00~05	0~ 5	3[dB] step、0~5:-6[dB]~9[dB]
	VALUE3	EQ FREQUENCY	BP6~0	00~7F	0~ 127	
	VALUE4	EQ GAIN	BP4~0	00~0E	0~ 14	00:-∞、01~0E:-6[dB]~+6[dB]
		EQ RANGE	BP7	00~01	0~ 1	0:LOW、 1:HIGH
HPF12	VALUE1	FLT CUTOFF FREQUENCY	BP7~0	00~7F	0~ 127	
	VALUE2	FLT RESONANCE	BP2~0	00~05	0~ 5	3[dB] step、0~5:-6[dB]~9[dB]
	VALUE3	EQ FREQUENCY	BP6~0	00~7F	0~ 127	
	VALUE4	EQ GAIN	BP4~0	00~0E	0~ 14	00:-∞、01~0E:-6[dB]~+6[dB]
		EQ RANGE	BP7	00~01	0~ 1	0:LOW、 1:HIGH
LPF24	VALUE1	FLT CUTOFF FREQUENCY	BP7~0	00~7F	0~ 127	
	VALUE2	FLT RESONANCE	BP2~0	00~05	0~ 5	6[dB] step、0~5:-12[dB]~18[dB]
HPF24	VALUE1	FLT CUTOFF FREQUENCY	BP7~0	00~7F	0~ 127	
	VALUE2	FLT RESONANCE	BP2~0	00~05	0~ 5	6[dB] step、0~5:-12[dB]~18[dB]
BPF	VALUE1	LOW CUTOFF FREQUENCY	BP7~0	00~7F	0~ 127	
	VALUE2	LOW RESONANCE	BP2~0	00~05	0~ 5	3[dB] step、0~5:-6[dB]~9[dB]
	VALUE3	HI CUTOFF FREQUENCY	BP7~0	00~7F	0~ 127	
	VALUE4	HI RESONANCE	BP2~0	00~05	0~ 5	3[dB] step、0~5:-6[dB]~9[dB]

REMARK 3 : INTERACTION CONNECT

INTERACTION	1ST DATA	2ND DATA	3RD DATA	4TH DATA
OFF	NO CONNECT	NO CONNECT	NO CONNECT	NO CONNECT
1ST<->2ND	DUAL / ALL	NO CONNECT	NO CONNECT	NO CONNECT
	NO CONNECT	DUAL / ALL	NO CONNECT	NO CONNECT
	DUAL / ALL	DUAL / ALL	NO CONNECT	NO CONNECT
3RD<->4TH	NO CONNECT	NO CONNECT	DUAL / ALL	NO CONNECT
	NO CONNECT	NO CONNECT	NO CONNECT	DUAL / ALL
	NO CONNECT	NO CONNECT	DUAL / ALL	DUAL / ALL
1ST<->2ND, 3RD<->4TH (except for every tone ALL CONNECT)	DUAL / ALL	DUAL / ALL	DUAL / ALL	DUAL / ALL
ALL	ALL CONNECT	ALL CONNECT	ALL CONNECT	ALL CONNECT

WSA DRUM SOUND PARAMETER

OUTLINE OF DRUM SOUND

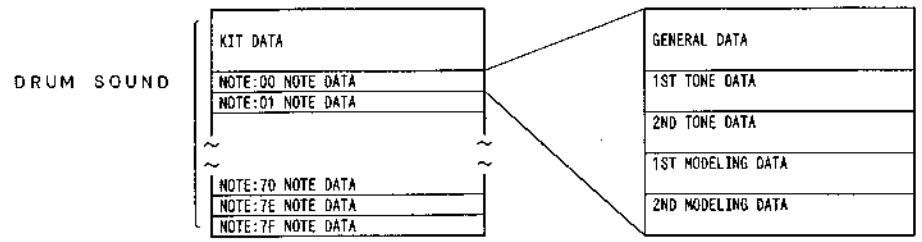

KIT DATA

PARAMETER No. (HEX)	SOUND PARAMETER	RANGE BIT	RANGE DATA (HEX)	RANGE DATA (DEC)	MEMO
	NAME				
000 ~ 00F	16 CHARACTER	BP6~0	20~7F	32~ 127	' '(SPACE)~'}'
	ATTRIBUTE				
	ATTRIBUTE FLAG				
010	PARAMETER MODE	BP7~6	00~00	0~ 3	2:DRUM MODE FIXED
	CONTROLLERS				
	PITCH BEND				
011	ON/OFF,PHASE	BP7~0	→	→	ON/OFF(0:OFF,1:ON)/PHASE(0:ON,1:INVERSE) PHASE ON/OF PHASE ON/OF BP7 BP6 BP5 BP4 BP3 BP2 BP1 BP0 2ND 1ST
012	FUNCTION SELECT	BP6~0	00~7F	0~ 127	→ Refer to REMARK 1 Don't edit MSB parameter
013	DEPTH	BP6~0	00~7F	0~ 127	64:STANDARD
	MODULATION WHEEL 1				
	SELECT1				
014 ~ 016	(SAME OF THE ABOVE)				
	SELECT2				
017 ~ 019	(SAME OF THE ABOVE)				
	MODULATION WHEEL 2				
	SELECT1				
01A ~ 01C	(SAME OF THE ABOVE)				
	SELECT2				
01D ~ 01F	(SAME OF THE ABOVE)				
	REALTIME CREATOR				0:OFF,1:ON
020	BOX SELECT	BP6~0	→	→	BP0:BOX1,BP1:BOX2,BP2:BOX3,BP3:BOX4,BP4:BOX5,BP5:BOX6
	REALTIME CONTROLLER				0:OFF,1:ON
021	BOX SELECT	BP6~0	→	→	BP0:BOX1,BP1:BOX2,BP2:BOX3,BP3:BOX4,BP4:BOX5,BP5:BOX6
	CONTROL PEDAL				
	SELECT1				
022 ~ 024	(SAME OF THE ABOVE)				
	SELECT2				
025 ~ 027	(SAME OF THE ABOVE)				
	AFTER TOUCH				
	SELECT1				
028 ~ 02A	(SAME OF THE ABOVE)				
	SELECT2				
02B ~ 02D	(SAME OF THE ABOVE)				
	BOX SELECT				
	CONTROLLER BOX1 X				
02E ~ 030	(SAME OF THE ABOVE)				
	CONTROLLER BOX1 Y				
031 ~ 033	(SAME OF THE ABOVE)				
	CONTROLLER BOX2 X				
034 ~ 036	(SAME OF THE ABOVE)				
	CONTROLLER BOX2 Y				
037 ~ 039	(SAME OF THE ABOVE)				
	CONTROLLER BOX3 X				
03A ~ 03C	(SAME OF THE ABOVE)				
	CONTROLLER BOX3 Y				
03D ~ 03F	(SAME OF THE ABOVE)				
	CONTROLLER BOX4 X				
040 ~ 042	(SAME OF THE ABOVE)				
	CONTROLLER BOX4 Y				
043 ~ 045	(SAME OF THE ABOVE)				
	CONTROLLER BOX5 X				
046 ~ 048	(SAME OF THE ABOVE)				
	CONTROLLER BOX5 Y				
049 ~ 04B	(SAME OF THE ABOVE)				
	CONTROLLER BOX6 X				
04C ~ 04E	(SAME OF THE ABOVE)				
	CONTROLLER BOX6 Y				
04F ~ 051	(SAME OF THE ABOVE)				
	MIXER				
	EFFECT OUTPUT SEL				1:MAIN, 2:SUB1, 3:SUB2, 4:SUB3
052	EFFECT1	BP3~0	01~04	1~ 4	
	EFFECT2	BP7~4	01~04	1~ 4	
	DSP EFFECT				
	COMMON				
053	ALGORITHM	BP0	00~01	0~ 1	0:SERIAL, 1:PARRALLEL
	EFFECT1				Refer to DSP EFFECT pages
054	TYPE		~	~	
	PARAMETER				
055	VALUE1		~	~	
056	VALUE2		~	~	
057	VALUE3		~	~	
058	VALUE4		~	~	
059	VALUE5		~	~	
05A	VALUE6		~	~	
05B	VALUE7		~	~	
05C	VALUE8		~	~	
05D	VALUE9		~	~	
05E	VALUE10		~	~	
05F	VALUE11		~	~	
060	VALUE12		~	~	
061	VALUE13		~	~	
062	VALUE14		~	~	
063	VALUE15		~	~	
064	VALUE16		~	~	
065	VALUE17		~	~	
066	VALUE18		~	~	
067	VALUE19		~	~	
068	VALUE20		~	~	
069	ANOTHER EFF SEND		~	~	
06A	DYNAMIC CONTROL		~	~	
	EFFECT2				Refer to DSP EFFECT pages
06B	TYPE		~	~	
	PARAMETER				
06C	VALUE1		~	~	
06D	VALUE2		~	~	
06E	VALUE3		~	~	
06F	VALUE4		~	~	
070	VALUE5		~	~	
071	VALUE6		~	~	
072	VALUE7		~	~	
073	VALUE8		~	~	
074	VALUE9		~	~	
075	VALUE10		~	~	
076	VALUE11		~	~	
077	VALUE12		~	~	
078	VALUE13		~	~	

079	VALUE14		~	~	
07A	VALUE15		~	~	
07B	VALUE16		~	~	
07C	VALUE17		~	~	
07D	VALUE18		~	~	
07E	VALUE19		~	~	
07F	VALUE20		~	~	
080	ANOTHER EFF SEND		~	~	
081	DYNAMIC CONTROL		~	~	
	REVERB				Refer to DSP EFFECT pages
082	TYPE		~	~	
	PARAMETER				
083	VALUE1		~	~	
084	VALUE2		~	~	
085	VALUE3		~	~	
086	VALUE4		~	~	
087	VALUE5		~	~	
088	VALUE6		~	~	
089	VALUE7		~	~	
08A	VALUE8		~	~	
08B	VALUE9		~	~	
08C	VALUE10		~	~	
08D	VALUE11		~	~	
08E	VALUE12		~	~	
08F	VALUE13		~	~	
090	VALUE14		~	~	
091	VALUE15		~	~	
092	VALUE16		~	~	
093	VALUE17		~	~	
094	VALUE18		~	~	
095	VALUE19		~	~	
096	VALUE20		~	~	
097	DYNAMIC CONTROL		~	~	
	SOUND SELECT				128 NOTE
	NOTE:00				
098	TTN SELECT	BP6~0	00~7F	0~ 127	
099	TONE KIND	BP7~6	00~03	0~ 3	0:NORMAL、1:DRUM、2:ATTACK
	TONE LOCATION	BP5~4	00~03	0~ 3	0:INTERNAL ROM、1:INTERNAL RAM、2: EXTERNAL ROM
	BANK SELECT	BP3~0	00~0F	0~ 15	
	NOTE:01(C-2)				
09A ~ 09B	(SAME OF THE ABOVE)				
	NOTE:02(Db-2)				
09C ~ 09D	(SAME OF THE ABOVE)				
	:				
	:				
	NOTE:7F(Ab8)				
196 ~ 197	(SAME OF THE ABOVE)				
	NOTE DATA				128 NOTE、SAME OF THE FOLLOWING
0198 ~	NOTE:00(C-2)	–	–	–	
022E ~	NOTE:01(Db-2)	–	–	–	
02C4 ~	NOTE:02(D-2)	–	–	–	
035A ~	NOTE:03(Eb-2)	–	–	–	
03F0 ~	NOTE:04(E-2)	–	–	–	
0486 ~	NOTE:05(F-2)	–	–	–	
051C ~	NOTE:06(F#-2)	–	–	–	
05B2 ~	NOTE:07(G-2)	–	–	–	
0648 ~	NOTE:08(Ab-2)	–	–	–	
06DE ~	NOTE:09(A-2)	–	–	–	
0774 ~	NOTE:0A(Bb-2)	–	–	–	
080A ~	NOTE:0B(B-2)	–	–	–	
08A0 ~	NOTE:0C(C-1)	–	–	–	
0936 ~	NOTE:0D(Db-1)	–	–	–	
09CC ~	NOTE:0E(D-1)	–	–	–	
0A62 ~	NOTE:0F(Eb-1)	–	–	–	
0AF8 ~	NOTE:10(E-1)	–	–	–	
0B8E ~	NOTE:11(F-1)	–	–	–	
0C24 ~	NOTE:12(F#-1)	–	–	–	
0CBA ~	NOTE:13(G-1)	–	–	–	
0D50 ~	NOTE:14(Ab-1)	–	–	–	
0DE6 ~	NOTE:15(A-1)	–	–	–	
0E7C ~	NOTE:16(Bb-1)	–	–	–	
0F12 ~	NOTE:17(B-1)	–	–	–	
0FA8 ~	NOTE:18(C0)	–	–	–	
103E ~	NOTE:19(Db0)	–	–	–	
10D4 ~	NOTE:1A(D0)	–	–	–	
116A ~	NOTE:1B(Eb0)	–	–	–	
1200 ~	NOTE:1C(E0)	–	–	–	
1296 ~	NOTE:1D(F0)	–	–	–	
132C ~	NOTE:1E(F#0)	–	–	–	
13C2 ~	NOTE:1F(G0)	–	–	–	
1458 ~	NOTE:20(Ab0)	–	–	–	
14EE ~	NOTE:21(A0)	–	–	–	
1584 ~	NOTE:22(Bb0)	–	–	–	
161A ~	NOTE:23(B0)	–	–	–	
1680 ~	NOTE:24(C1)	–	–	–	
1746 ~	NOTE:25(Db1)	–	–	–	
170C ~	NOTE:26(D1)	–	–	–	
1872 ~	NOTE:27(Eb1)	–	–	–	
1908 ~	NOTE:28(E1)	–	–	–	
199E ~	NOTE:29(F1)	–	–	–	
1A34 ~	NOTE:2A(F#1)	–	–	–	
1ACA ~	NOTE:2B(G1)	–	–	–	
1B60 ~	NOTE:2C(Ab1)	–	–	–	
1BF6 ~	NOTE:2D(A1)	–	–	–	
1C8C ~	NOTE:2E(Bb1)	–	–	–	
1D22 ~	NOTE:2F(B1)	–	–	–	
1DB8 ~	NOTE:30(C2)	–	–	–	
1E4E ~	NOTE:31(Db2)	–	–	–	
1EE4 ~	NOTE:32(D2)	–	–	–	
1F7A ~	NOTE:33(Eb2)	–	–	–	
2010 ~	NOTE:34(E2)	–	–	–	
20A6 ~	NOTE:35(F2)	–	–	–	
213C ~	NOTE:36(F#2)	–	–	–	
21D2 ~	NOTE:37(G2)	–	–	–	
2268 ~	NOTE:38(Ab2)	–	–	–	
22FE ~	NOTE:39(A2)	–	–	–	
2394 ~	NOTE:3A(Bb2)	–	–	–	
242A ~	NOTE:3B(B2)	–	–	–	
24C0 ~	NOTE:3C(C3)	–	–	–	
2556 ~	NOTE:3D(Db3)	–	–	–	
25EC ~	NOTE:3E(D3)	–	–	–	
2682 ~	NOTE:3F(Eb3)	–	–	–	
2718 ~	NOTE:40(E3)	–	–	–	
27AE ~	NOTE:41(F3)	–	–	–	
2844 ~	NOTE:42(F#3)	–	–	–	
28DA ~	NOTE:43(G3)	–	–	–	
2970 ~	NOTE:44(Ab3)	–	–	–	
2A06 ~	NOTE:45(A3)	–	–	–	
2A9C ~	NOTE:46(Bb3)	–	–	–	
2B32 ~	NOTE:47(B3)	–	–	–	
2BC8 ~	NOTE:48(C4)	–	–	–	
2C5E ~	NOTE:49(Db4)	–	–	–	
2CF4 ~	NOTE:4A(D4)	–	–	–	
2D8A ~	NOTE:4B(Eb4)	–	–	–	
2E20 ~	NOTE:4C(E4)	–	–	–	
2EB6 ~	NOTE:4D(F4)	–	–	–	
2F4C ~	NOTE:4E(F#4)	–	–	–	
2FE2 ~	NOTE:4F(G4)	–	–	–	
3078 ~	NOTE:50(Ab4)	–	–	–	
310E ~	NOTE:51(A4)	–	–	–	
31A4 ~	NOTE:52(Bb4)	–	–	–	
323A ~	NOTE:53(B4)	–	–	–	
32D0 ~	NOTE:54(C5)	–	–	–	
3366 ~	NOTE:55(Db5)	–	–	–	
33FC ~	NOTE:56(D5)	–	–	–	
3492 ~	NOTE:57(Eb5)	–	–	–	
3528 ~	NOTE:58(E5)	–	–	–	

0B8E ～	NOTE:11(F-1)	—	—	—
0C24 ～	NOTE:12(F#-1)	—	—	—
3492 ～	NOTE:57(E5)	—	—	—
3528 ～	NOTE:58(E6)	—	—	—
358E ～	NOTE:59(F5)	—	—	—
3654 ～	NOTE:5A(F#5)	—	—	—
36EA ～	NOTE:5B(G5)	—	—	—
3780 ～	NOTE:5C(Ab5)	—	—	—
3B16 ～	NOTE:5D(A5)	—	—	—
3BAC ～	NOTE:5E(Bb5)	—	—	—
3942 ～	NOTE:5F(B5)	—	—	—
39D8 ～	NOTE:60(C6)	—	—	—
3A6E ～	NOTE:61(Db6)	—	—	—
3B04 ～	NOTE:62(D6)	—	—	—
3B9A ～	NOTE:63(Eb6)	—	—	—
3C30 ～	NOTE:64(E6)	—	—	—
3CC6 ～	NOTE:65(F6)	—	—	—
3D5C ～	NOTE:66(F#6)	—	—	—
3DF2 ～	NOTE:67(G6)	—	—	—
3E88 ～	NOTE:68(Ab6)	—	—	—
3F1E ～	NOTE:69(A6)	—	—	—
3FB4 ～	NOTE:6A(Bb6)	—	—	—
404A ～	NOTE:6B(B6)	—	—	—
40E0 ～	NOTE:6C(C7)	—	—	—
4176 ～	NOTE:6D(Db7)	—	—	—
420C ～	NOTE:6E(D7)	—	—	—
42A2 ～	NOTE:6F(Eb7)	—	—	—
4338 ～	NOTE:70(E7)	—	—	—
43CE ～	NOTE:71(F7)	—	—	—
4464 ～	NOTE:72(F#7)	—	—	—
44FA ～	NOTE:73(G7)	—	—	—
4590 ～	NOTE:74(Ab7)	—	—	—
4626 ～	NOTE:75(A7)	—	—	—
46BC ～	NOTE:76(Bb7)	—	—	—
4752 ～	NOTE:77(B7)	—	—	—
47E8 ～	NOTE:78(C8)	—	—	—
487E ～	NOTE:79(Db8)	—	—	—
4914 ～	NOTE:7A(D8)	—	—	—
49AA ～	NOTE:7B(Eb8)	—	—	—
4A40 ～	NOTE:7C(E8)	—	—	—
4AD6 ～	NOTE:7D(F8)	—	—	—
4B6C ～	NOTE:7E(F#8)	—	—	—
4C02 ～	NOTE:7F(G8)	—	—	—

NOTE GENERAL DATA

PARAMETER No. (HEX)	SOUND PARAMETER	BIT	RANGE DATA (HEX)	RANGE DATA (DEC)	MEMO
	NAME				
000 ～ 00C	13 CHARACTER	BP6～0	20～7F	32～ 127	' '(SPACE)～'}'
	ATTRIBUTE				
00D	ATTRIBUTE FLAG				
	KEY OFF MODE	BP5	00～01	0～ 1	0:OFF、1:ON
	TONE ON/OFF	BP3～0	→	→	ON/OFF(0:OFF、1:ON)
					BP7 BP6 BP5 BP4 BP3 BP2 BP1 BP0 (ON/OFF: BP2, BP0; 2ND: BP3, BP2; 1ST: BP1, BP0)
00E	SAME GROUP DUMP				If DUMP FLAG=1、same group sound dumped.
	DUMP FLAG	BP7	00～01	0～ 1	0:OFF、1:ON
	GROUP NUMBER	BP6～0	00～7F	0～ 127	
	MIXER				
	OUTPUT SELECT				0:NO OUTPUT、1:MAIN、2:SUB1、3:SUB2、4:SUB3、5:EFFECT2
00F	MAIN	BP3～0	00～05	0～ 5	
	SUB	BP7～4	00～05	0～ 5	
	EFFECT SEND VOLUME				
010	EFFECT1	BP6～0	00～7F	0～ 127	
011	REVERB	BP6～0	00～7F	0～ 127	

NOTE TONE DATA (1st、2nd)

PARAMETER No. (HEX) 1st	2nd	—	—	SOUND PARAMETER	BIT	RANGE DATA (HEX)	RANGE DATA (DEC)	MEMO
				ATTRIBUTE				
012	024	—	—	DELAY	BP5～0	00～32	0～ 50	0:DELAY OFF
013	025	—	—	PANNING	BP7～0	00～80	0～ 128	0～127:FIXED PAN、128:RANDOM PAN
				TONE SELECT				
014	026	—	—	TTN SELECT	BP6～0	00～7F	0～ 127	
015	027	—	—	TONE KIND	BP7～6	00～03	0～ 3	0:NORMAL、1:DRUM、2:ATTACK
				TONE LOCATION	BP5～4	00～03	0～ 3	0:INTERNAL ROM、1:INTERNAL RAM,2: EXTERNAL ROM
				BANK SELECT	BP3～0	00～0F	0～ 15	
				PITCH				
016	028	—	—	KEY SHIFT	BP7～0	E8～18	- 50～+ 50	
017	029	—	—	DETUNE	BP7～0	80～7F	-128～+127	
				LEVEL				
018	02A	—	—	VOLUME	BP6～0	00～7F	0～ 127	1step 0.375[dB]
019	030	—	—	TOUCH DEPTH	BP7～0	CE～32	- 50～+ 50	
01A	031	—	—	TOUCH CURVE	BP7～5	00～06	0～ 6	0:-3curve、1:-2curve、2:-1curve、3:0curve、4:+1curve、5:+2curve、6:+3curve
				ENVELOPE BOX				
				SHAPE				
01B	032	—	—	ATTACK TIME	BP6～0	00～64	0～ 100	
01C	033	—	—	DECAY1 TIME	BP6～0	00～64	0～ 100	
01D	034	—	—	SUSTAIN1 LEVEL	BP6～0	00～64	0～ 100	
01E	035	—	—	DECAY2 TIME	BP6～0	00～64	0～ 100	
01F	036	—	—	SUSTAIN2 LEVEL	BP6～0	00～64	0～ 100	
020	037	—	—	RELEASE TIME	BP6～0	00～64	0～ 100	
				TOUCH FOLLOW				
021	038	—	—	ATTACK	BP7～0	CE～32	- 50～+ 50	
022	039	—	—	DECAY	BP7～0	CE～32	- 50～+ 50	
				FILTER				
023	03A	—	—	MODE	BP2～0	00～06	0～ 6	0:THROUGH、1:LPF12+EQ、2:HPF12+EQ、3:LPF24、4:HPF24、5:BPF
				TOUCH CURVE	BP7～5	00～06	0～ 6	0:-3curve、1:-2curve、2:-1curve、3:0curve、4:+1curve、5:+2curve、6:+3curve
024	03B	—	—	TOUCH DEPTH	BP5～0	00～32	0～ 50	
				PARAMETER				→ Refer to REMARK 2
025	03C	—	—	VALUE1		～	～	
026	03D	—	—	VALUE2		～	～	
027	03E	—	—	VALUE3		～	～	
028	03F	—	—	VALUE4		～	～	

NOTE MODELING DATA (1st、2nd)

PARAMETER No. (HEX) 1st	2nd	—	—	SOUND PARAMETER	BIT	RANGE DATA (HEX)	RANGE DATA (DEC)	MEMO
				DRIVER				
				THRESHOLD POINT				Threshold point of DRIVER WAVEFORM change
040	068	—	—	BETWEEN A AND B	BP6～0	00～7F	0～ 127	Provided that A < B < C < D
041	06C	—	—	BETWEEN B AND C	BP6～0	00～7F	0～ 127	
042	06D	—	—	BETWEEN C AND D	BP6～0	00～7F	0～ 127	
				DRIVER SELECT				
				DRIVER A				
043	06E	—	—	DRIVER TTN SELECT	BP6～0	00～7F	0～ 127	
044	06F	—	—	DRIVER KIND	BP7～6	00～03	0～ 3	0:NORMAL、1:DRUM、2:ATTACK
				DRIVER LOCATION	BP5～4	00～03	0～ 3	0:INTERNAL ROM、2:EXTERNAL ROM
				BANK SELECT	BP3～0	00～15	0～ 15	
				DRIVER B				
045	070	—	—	DRIVER TTN SELECT	BP6～0	00～7F	0～ 127	
046	071	—	—	DRIVER KIND	BP7～6	00～03	0～ 3	0:NORMAL、1:DRUM、2:ATTACK
				DRIVER LOCATION	BP5～4	00～03	0～ 3	0:INTERNAL ROM、2:EXTERNAL ROM
				BANK SELECT	BP3～0	00～15	0～ 15	

				DRIVER C				
047	072	—	—	DRIVER TTN SELECT	BP6~0	00~7F	0~ 127	
048	073	—	—	DRIVER KIND	BP7~6	00~03	0~ 3	0:NORMAL、1:DRUM、2:ATTACK
				DRIVER LOCATION	BP5~4	00~03	0~ 3	0:INTERNAL ROM、2:EXTERNAL ROM
				BANK SELECT	BP3~0	00~15	0~ 15	
				DRIVER D				
049	074	—	—	DRIVER TTN SELECT	BP6~0	00~7F	0~ 127	
04A	075	—	—	DRIVER KIND	BP7~6	00~03	0~ 3	0:NORMAL、1:DRUM、2:ATTACK
				DRIVER LOCATION	BP5~4	00~03	0~ 3	0:INTERNAL ROM、2:EXTERNAL ROM
				BANK SELECT	BP3~0	00~15	0~ 15	
				RESONATOR GENERAL				
				ATTRIBUTE				
048	076	—	—	INTERACTION CONNECT	BP7~6	00~03	0~ 3	0:NO CONECT、1:DUAL CONECT、2:ALL CONECT → Refer to REMARK3
				RESONATOR TYPE	BP5~0	00~3F	0~ 63	0:ORIGINAL、1~63:PRESET RESONATOR
04C	077	—	—	(RESERVE)	—	—	—	
				POSITION PARAMETER				
04D	078	—	—	POSITION	BP7~0	00~FA	0~ 250	0.2% step、0~50%
04E	079	—	—	FORMANT FLAG	BP7	00~01	0~ 1	0:FIXED、1:MOVE
				DEPTH	BP6~0	00~7F	0~ 127	
04F	07A	—	—	(RESERVE)	—	—	—	
050	07B	—	—	TOUCH	BP7~0	CE~32	- 50~+ 50	
				POSITION MOVEMENT				
051	07C	—	—	WIDTH	BP5~0	00~32	0~ 50	
052	07D	—	—	SPEED	BP5~0	00~32	0~ 50	
				SAMPLE/HOLD	BP7	00~01	0~ 1	0:OFF、1:ON
				INTERACTION				
053	07E	—	—	GAIN	BP6~0	00~7F	0~ 127	
054	07F	—	—	(RESERVE)	—	—	—	
				MAIN RESONATOR				
				RESONATOR				
055	080	—	—	RESONATOR MODE	BP7	00~01	0~ 1	0:POSITIVE FEEDBACK、1:NEGATIVE FEEDBACK
				FITTING	BP6~0	00~7F	0~ 127	
056	081	—	—	MUTING	BP6~0	00~7F	0~ 127	00~7F=80~00(00:-127、……、7F:0) CERTAINLY MSB=0 FIXED
				TOUCH FOLLOW				
057	082	—	—	TOUCH FITTING	BP7~0	CE~32	- 50~+ 50	
058	083	—	—	(RESERVE)	—	—	—	CERTAINLY 0 FIXED
059	084	—	—	(RESERVE)	—	—	—	CERTAINLY MSB=0 FIXED
05A	085	—	—	(RESERVE)	—	—	—	Don't edit this parameter
05B	086	—	—	(RESERVE)	—	—	—	Don't edit this parameter
05C	087	—	—	(RESERVE)	—	—	—	CERTAINLY 0 FIXED
				PITCH				
05D	088	—	—	KEY SHIFT	BP7~0	C4~3C	-60~+ 60	
05E	089	—	—	DETUNE	BP7~0	80~7F	-128~+127	
				SUB RESONATOR				
				RESONATOR				
05F	08A	—	—	RESONATOR MODE	BP7	00~01	0~ 1	0:POSITIVE FEEDBACK、1:NEGATIVE FEEDBACK
				FITTING	BP6~0	00~7F	0~ 127	
060	08B	—	—	MUTING	BP6~0	00~7F	0~ 127	00~7F=80~00(00:-127、……、7F:0) CERTAINLY MSB=0 FIXED
061	08C	—	—	SUB GAIN	BP7~0	9C~64	-100~+100	
				TOUCH FOLLOW				
062	08D	—	—	TOUCH FITTING	BP7~0	CE~32	- 50~+ 50	
063	08E	—	—	(RESERVE)	—	—	—	CERTAINLY 0 FIXED
064	08F	—	—	TOUCH SUB GAIN	BP7~0	CE~32	- 50~+ 50	
065	090	—	—	(RESERVE)	—	—	—	CERTAINLY MSB=1 FIXED
066	091	—	—	(RESERVE)	—	—	—	Don't edit this parameter
067	092	—	—	(RESERVE)	—	—	—	Don't edit this parameter
068	093	—	—	(RESERVE)	—	—	—	CERTAINLY 0 FIXED
				PITCH				
069	094	—	—	KEY SHIFT	BP7~0	C4~3C	- 60~+ 60	
06A	095	—	—	DETUNE	BP7~0	80~7F	-128~+127	

REMARK

REMARK 1 : CONTROL FUNCTION

No	CONTROL FUNCTION	No	CONTROL FUNCTION	No	CONTROL FUNCTION	No	CONTROL FUNCTION
00	OFF	10	(RESERVE)	20	POSITION MOVEMENT WIDTH	30	EFFECT2 DYNAMIC CONTROL
01	PITCH BEND	11	(RESERVE)	21	POSITION MOVEMENT SPEED	31	REVERB DYNAMIC CONTROL
02	SUSTAIN LEVEL	12	(RESERVE)	22	(RESERVE)		
03	FILTER CUTOFF FREQUENCY	13	(RESERVE)	23	*MUTING		32~7F : (RESERVE)
04	(RESERVE)	14	(RESERVE)	24	*RESONATOR KEYSHIFT		
05	(RESERVE)	15	(RESERVE)	25	SUB GAIN		
06	(RESERVE)	16	(RESERVE)	26	*DELAY		
07	(RESERVE)	17	(RESERVE)	27	*PANNING		
08	(RESERVE)	18	(RESERVE)	28	*EFFECT1 SEND		
09	(RESERVE)	19	(RESERVE)	29	*REVERB SEND		
0A	(RESERVE)	1A	(RESERVE)	2A	*LEVEL		
0B	(RESERVE)	1B	(RESERVE)	2B	*AMP ENV. ATTACK TIME		
0C	(RESERVE)	1C	*FITTING	2C	*AMP ENV. DECAY TIME		
0D	(RESERVE)	1D	POSITION	2D	*AMP ENV. RELEASE TIME		
0E	(RESERVE)	1E	POSITION DEPTH	2E	*FILTER RESONANCE		
0F	(RESERVE)	1F	(RESERVE)	2F	EFFECT1 DYNAMIC CONTROL		

ATTENTION * : This function not use AFTER TOUCH

REMARK 2 : FILTER PARAMETER(VALUE)

FILTER MODE	SOUND PARAMETER		RANGE BIT	RANGE DATA (HEX)	RANGE DATA (DEC)	MEMO
LPF12	VALUE1	FLT CUTOFF FREQUENCY	BP7~0	00~7F	0~ 127	
	VALUE2	FLT RESONANCE	BP2~0	00~05	0~ 5	3[dB] step、0~5:-6[dB]~9[dB]
	VALUE3	EQ FREQUENCY	BP6~0	00~7F	0~ 127	
	VALUE4	EQ GAIN	BP4~0	00~0E	0~ 14	00:-∞、01~0E:-6[dB]~+6[dB]
		EQ RANGE	BP7	00~01	0~ 1	0:LOW、1:HIGH
HPF12	VALUE1	FLT CUTOFF FREQUENCY	BP7~0	00~7F	0~ 127	
	VALUE2	FLT RESONANCE	BP2~0	00~05	0~ 5	3[dB] step、0~5:-6[dB]~9[dB]
	VALUE3	EQ FREQUENCY	BP6~0	00~7F	0~ 127	
	VALUE4	EQ GAIN	BP4~0	00~0E	0~ 14	00:-∞、01~0E:-6[dB]~+6[dB]
		EQ RANGE	BP7	00~01	0~ 1	0:LOW、1:HIGH
LPF24	VALUE1	FLT CUTOFF FREQUENCY	BP7~0	00~7F	0~ 127	
	VALUE2	FLT RESONANCE	BP2~0	00~05	0~ 5	6[dB] step、0~5:-12[dB]~18[dB]
HPF24	VALUE1	FLT CUTOFF FREQUENCY	BP7~0	00~7F	0~ 127	
	VALUE2	FLT RESONANCE	BP2~0	00~05	0~ 5	6[dB] step、0~5:-12[dB]~18[dB]
BPF	VALUE1	LOW CUTOFF FREQUENCY	BP7~0	00~7F	0~ 127	
	VALUE2	LOW RESONANCE	BP2~0	00~05	0~ 5	3[dB] step、0~5:-6[dB]~9[dB]
	VALUE3	HI CUTOFF FREQUENCY	BP7~0	00~7F	0~ 127	
	VALUE4	HI RESONANCE	BP2~0	00~05	0~ 5	3[dB] step、0~5:-6[dB]~9[dB]

REMARK 3 : INTERACTION CONECT

INTERACTION	1ST DATA	2ND DATA
OFF	NO CONNECT	NO CONNECT
1ST<->2ND	DUAL / ALL NO CONNECT DUAL / ALL	NO CONNECT DUAL / ALL DUAL / ALL