Technical Documents

EIV
e64
E4K
E4X
e6400
E-Synth Rack
E-Synth Keyboard
EOS Ultra Series

E-MU

E-MU PN FI11039 Rev. A

EOS Technical Documents

FI11039 Rev. A

Important Notice:
In order to obtain warranty service on an E-MU sampler or synthesizer, the serial number sticker must be intact and the customer must have a sales receipt or other proof of purchase. If there is no serial number sticker on the product, please contact E-MU Systems at once.

This product is covered under one or more of the following U. S. patents:
3,969,682; 3,986,423; 4,404,529; 4,506,579; 4,699,038; 4,987,600; 5,013,105; 5,072,645; 5,111,727 and foreign patents and/or pending patents.

E-MU/ENSONIQ World Headquarters
U.S.A.
P.O. Box 660015
Scotts Valley, CA USA
95067–0015
Telephone: 831-438-1921
Fax: 831-438-8612
Internet: www.emu.com

Europe, Africa, Middle East
E-MU/ENSONIQ, Ltd.
Suite 6, Adam Ferguson House
Eskmills Industrial Park
Musselburgh, East Lothian
Scotland, EH21 7PQ
Telephone: +44 (0) 131-653-6556
Fax: +44 (0) 131-665-0473

Table of Contents

Introduction

The information contained in this manual is proprietary to E-MU Systems, Inc. The entire manual is protected under copyright and none of it may be reproduced by any means without written permission from E-MU. Please consider all of the data in this manual proprietary. Use it to service EOS samplers only.

EOS series samplers are products that make extensive use of VLSI technology. This technology has several benefits including increased performance, increased reliability and reduced cost to the consumer.

Most of the components are surface mounted, which can be a problem if you are not familiar with them or do not have the proper tools. Please do not attempt to remove and replace surface-mounted components if you are unsure about your skill. It is very easy to cause serious damage to the circuit board which will not be covered under warranty.

To service EOS series samplers, you should be familiar with digital logic, DAC's, and op-amps, as well as microprocessor troubleshooting techniques. Before attempting to service or repair a unit, you should have on hand (at least) the following equipment: a digital multimeter, a 100 MHz dual trace oscilloscope, and basic technician hand tools.

We feel obliged to remind you that any modification other than as specified by a factory authorized E-MU Change Order (ECO) voids the warranty of the instrument.

Please read this manual thoroughly before attempting to service EOS samplers. If you have any questions about the instrument, contact our Service Department at (831) 438-1921 between the hours of 9:00 - 5:00 PST, Monday through Friday.

Mechanical Procedures

Precautions

Always observe the following precautions:

- Always turn off the power to the unit and touch a grounded object before connecting or disconnecting any circuitry or removing or installing any PCBs.
- Do not bend or strain the PCBs. This may cause tiny breaks in the printed circuit traces which are extremely difficult to locate.

A Word About Soldered Parts

Many of the components in the EOS samplers are “surface mounted” meaning they are soldered directly to the PCB. Use extreme caution and work slowly and carefully when removing soldered components. If you are unsure about your desoldering skills it may be best to “clip out” the component, then desolder the leads rather than risk damaging the circuit board traces.

☞ To Replace a Soldered Component

1. Switch off the power to the unit.
2. Remove the PCB with the affected component from the instrument.
3. Desolder the component from both sides using a desoldering vacuum or solder wick.
4. Solder the new IC into place.

Opening E4K & E-Synth Keyboard

Before taking the unit apart, find a stable, soft, well lit workplace. A carpeted or rubber covered workbench is ideal. Place the unit on the bench with the front panel facing you. It is also a good idea to have a MIDI keyboard nearby so you can play the unit.

Disassembly

Remove the End Caps

1. To gain access to the interior of E4K, the end caps must first be removed. The two end caps are attached by means of (3) phillips head screws each. Looking directly at the end of the unit, you can see the three screws. The front screw is slightly shorter.

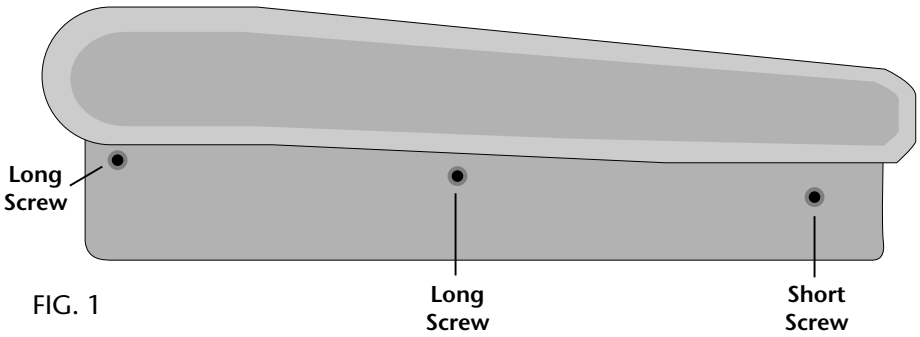

FIG. 1

2. When the screws are removed (and set aside in a safe place), pull the end cap straight out from the end.

Remove the Display Bezel

1. There are two more screws located underneath the display bezel. Lift the right edge of the plastic bezel slightly with your fingernail, then slide the entire bezel assembly to the right. The bezel assembly should easily pop out.

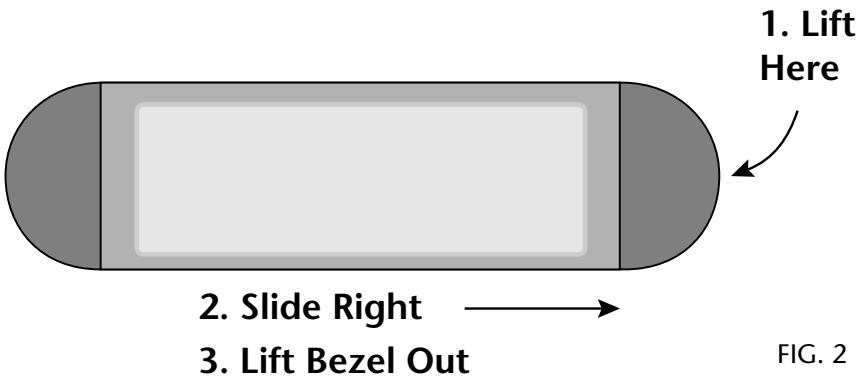

FIG. 2

2. Remove the two screws on either side of the bezel and set them aside in a safe place.

3. Remove the two phillips head screws on the sides of the display. Set these aside in a safe place.

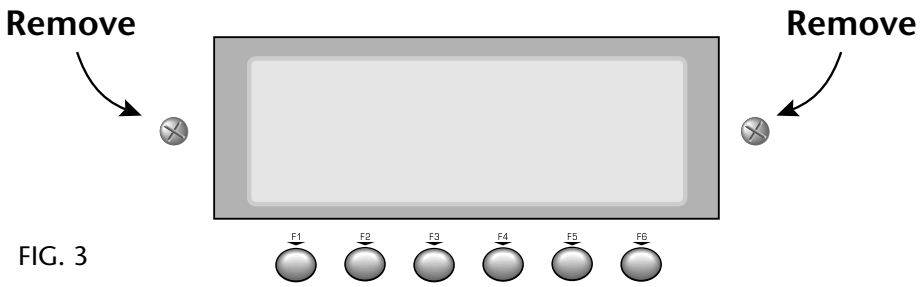

FIG. 3

Remove the Front Panel

1. There are three screws on each side of the control panel. The small screw (HS431) is self tapping. The others are machine screws. Remove these six screws and set aside. Refer to the diagram below.

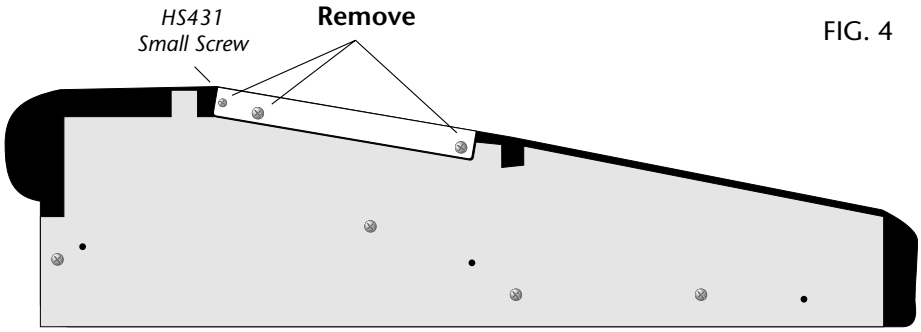

FIG. 4

2. Lift the metal top FROM THE FRONT and lift off the panel assembly with cables still attached. Tilt the panel back and prop it up using the slot in the top of the metal extrusion. This slot holds the control panel propped up like an automobile hood.

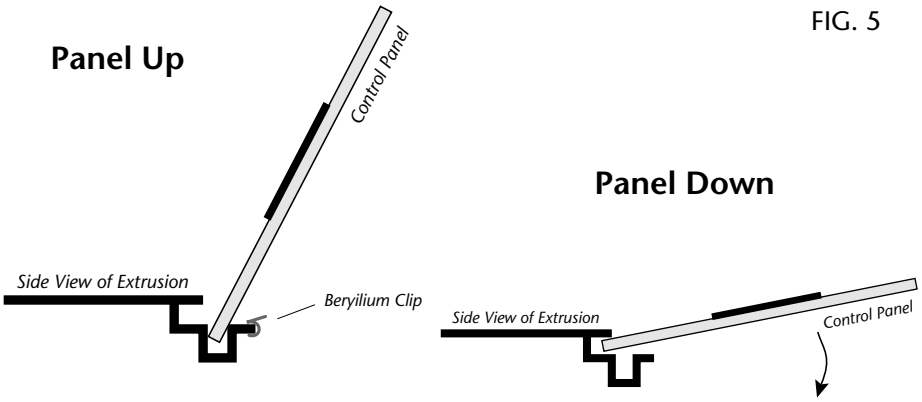

FIG. 5

Unplug the Front Panel Ribbon Cables

1. With the control panel propped up in the “up” position, prepare to remove the four cables connecting the control panel to the boards on the chassis. Three ribbon cables and a two-wire HV power cable must be removed.
2. Ground yourself by touching a grounded object.
3. Remove the ribbon cable connectors from the boards mounted to the bottom panel. Grasp the connectors firmly and pull up, rocking the connectors as you go to loosen them.
4. When all connectors are free, lift the control panel up and set it aside in a safe place.

Remove the Rear Extrusion

1. To allow easy access to the unit’s interior, the top-rear panel extrusion must be removed. The extrusion is held in place by (12) self-tapping screws. Ten screws are located on the back panel and there is also a screw on each side.

FIG. 6

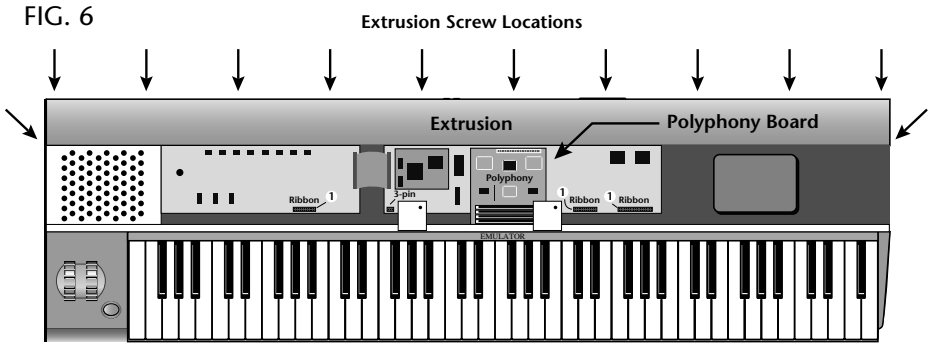

2. Remove the 12 screws and lift the extrusion up and out. Set it aside in a safe place.

Remove the Polyphony Board

1. The Polyphony Board is located roughly in the center of the unit as shown above.
2. Ground yourself by touching a grounded object.
3. The polyphony board is held in place with (4) locking nylon standoffs which are located in the four corners of the board (See fig. 7). Using the needle-nose pliers, squeeze the locking tab, while pulling up slightly on that corner.
4. Work all four corners of the board up until the tabs have released, then pull straight up to remove the old board.

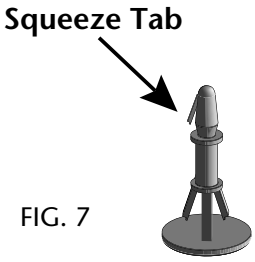

FIG. 7

Unplug the Rest of the CPU Board Cables

With the polyphony board now removed, prepare to remove the remaining five cables connected to the CPU board.

1. Ground yourself by touching a grounded object.
2. Remove the ribbon cable connectors connecting the CPU board to the output board and to the internal hard disk. Grasp the connectors firmly and pull up, rocking the connectors as you go to loosen them.
3. Next remove the floppy cable (located almost under the keyboard, on the left side of the board near the HV transformer). Pull straight up on the top-rear of the connector to release the clamp, then remove the cable (See fig. 8). A sharp pick or small screwdriver can be used to lift the cable clamp. To reconnect, insert the cable contact side to front and press the rear of the connector down to lock the cable in place.
4. Remove the two keyboard connectors (located almost under the keyboard, just to the right of center) by pulling straight up.

FIG. 8

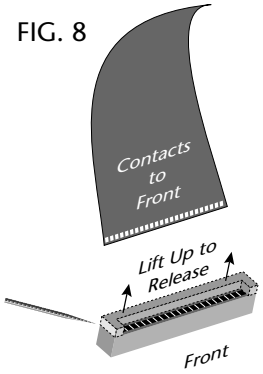

Remove the CPU Board

The CPU board is held in place by (6) screws on the back panel and (4) screws on the board itself.

1. Remove the screws on the back panel. The screw locations are as follows: (1) ASCII Keyboard plug, (2) on either side of the MIDI jacks (1) between the S/PDIF plugs, (2) on either side of the SCSI connector.
2. Remove the SCSI connector clips from the rear and set aside.
3. Remove the (4) board screws. (3 in front and 1 located rear-center.)
4. Carefully lift out the CPU board.

FIG. 9

SCSI Connector Clip

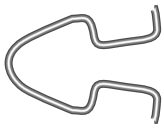

Reassemble the Unit

1. Lift the control panel out of the slot and slide the rear edge back into the horizontal slot in the rear extrusion. Align the control panel to the outer edges on each side of the unit.
2. Replace the two screws on either side of the display.
3. Replace the three screws on each end of the control panel. The small screw goes in the rear. You may have to adjust the control panel slightly so the screw holes align.
4. Replace the end caps. The lip on the top of the end cap rests on top of the control panel. Reinstall the three screws on end. The short screw goes in front.
5. Replace the display bezel. Set the bezel in the slots with the two pins on the right bottom of the bezel. Slide the bezel to the left, then press down on the right side.

Opening EOS Rack Units

Before taking the unit apart, find a stable, soft, well lit workplace. A carpeted or rubber covered workbench is ideal. Place the unit on the bench with the front panel facing you. It is also a good idea to have a MIDI keyboard nearby so you can play the unit.

Removing the Top Panel

You must remove the top panel to gain access to the interior.

☞ To Remove the Top Panel

1. To gain access to the interior of the unit, the top panel must first be removed. The top panel is attached to the main chassis by means of (7) screws. There are three screws along the back of the unit and two on each side.
2. When all the screws are removed, slide the metal top backwards and up off the unit, exposing the main circuit board. Set the top cover aside in a safe place and put the screws into a cup so they will not get lost. The power supply is covered by a metal box. Do not remove this metal cover!

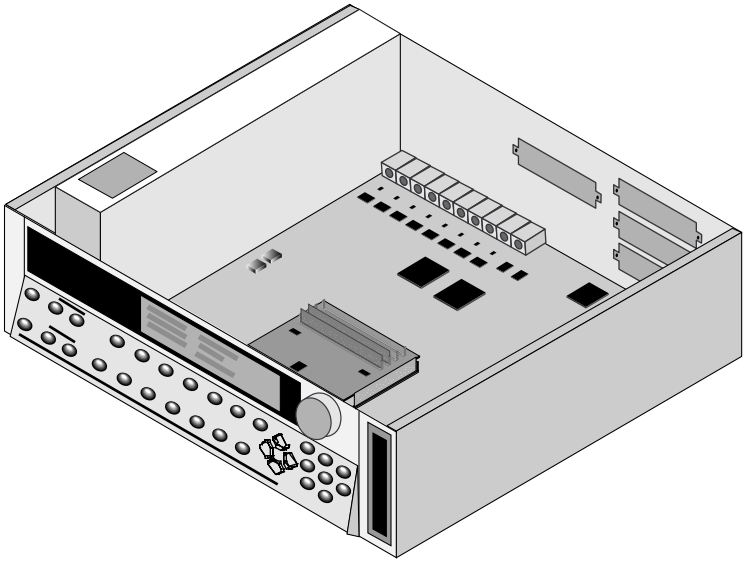

3. Removing the top panel exposes the main circuit board where most troubleshooting can be done.
4. The power supply cover is held in place by a single screw located on the rear panel, just below the fan opening.
5. After removing the screw, slide the power supply cover towards the front of the unit and lift out.

Removing the Front Panel Circuit Boards

You may need to remove the front panel circuit board in order to clean or replace the front panel buttons or to replace the rotary encoder (Data Entry Control) or to replace the LCD circuit board.

☞ To Access the Front Panel Circuit Boards

1. Disconnect the cables coming from the front panel from the main circuit board in the unit. Make sure to note the connections for later when you want to put it back together.
2. Remove the four (4) screws located on the outside of the box securing the front panel to the main chassis as shown in the following illustration.

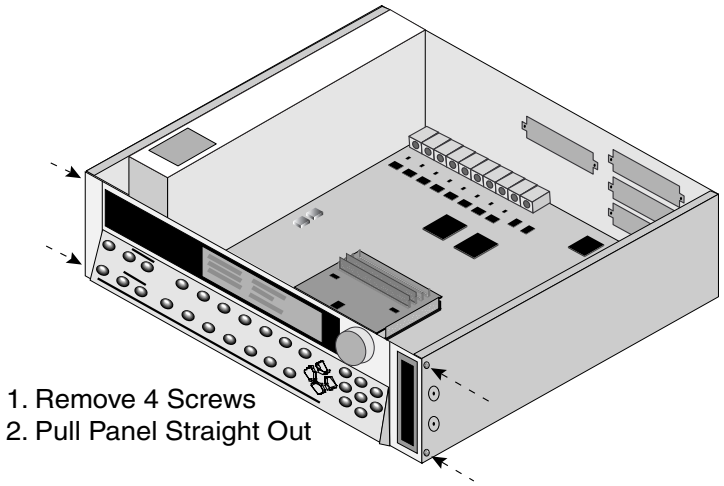

3. Remove the front panel from the main chassis.
4. The front panel circuit boards are sandwiched between a metal front panel plate and the molded plastic front panel. The metal plate is held to the plastic front panel by five self-tapping screws. Remove them.

Older EOS Rack units have a slightly different metal front panel plate, but thedisassemly is basically the same.

.

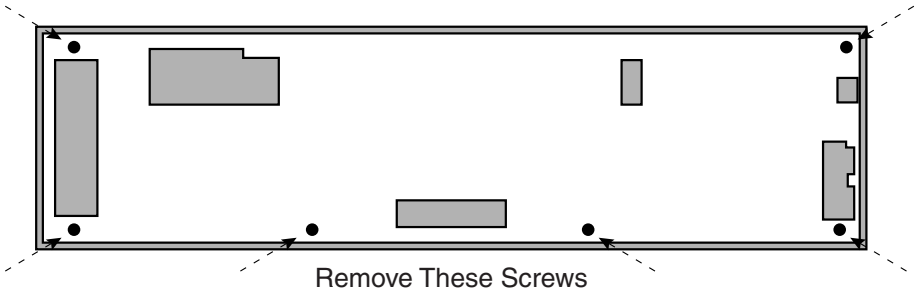

5. The re is a ribbon cable ferrite clamp attached to the button/LED ribbon cable in the center of the board. This must be removed before the circuit board can be separated from the metal front panel plate. The ferrite clamp is hinged with a latch that can be opened with a flat-bladed screwdriver.

- A single screw secures the headphone jack and volume control circuit board to the metal front panel plate.
- The LCD is attached to the metal front panel plate with four screws.
- The data encoder is mounted to a small circuit board which is mounted to the plastic front panel by means of two self-tapping screws. There is also a ball bearing threaded onto the encoder shaft. When replacing the encoder, be sure to transfer the ball bearing to the new part as it improves the feel of the data wheel.
- The front panel circuit board is attached by means of (7) nuts with attached lock-washers.
- The front panel switches are sealed and cannot be cleaned. If you have an intermittent switch, replace it.
- Clean the clear plastic display lens with Windex and a soft cloth. **Caution:** the display lens is easily scratched.

☞ Removing the Main Circuit Board

The main circuit board is attached directly to the chassis standoffs by (6) screws.

1. Disconnect all cables from the main board
2. Remove the rear panel jack nuts, the two screws securing the MIDI A port, the SCSI connector clips and the two screws securing the SCSI connector.
3. Remove the (6) screws securing the main board and remove the board.

To Reassemble the Unit

1. To reassemble, simply reverse the procedure used for disassembly. All the connectors on the main board are clearly marked as to their function.
2. Carefully insert the front edge of the top panel between the front panel and the top of the metal enclosure.
3. Next lay the top cover down flat on top of the enclosure. Make sure all the screw holes line up and reinstall the seven screws. The screws are all the same.

Installing Additional Memory *(Ultra Rack)*

Caution: *No more than 64 MB of sample RAM can be used together with Sound ROM. More memory CAN be installed however, and a special function (Master, Setup, Misc) can be used to temporarily disable the Sound ROM when more than 64 MB is needed.*

Sound RAM Memory Expansion

Ultra's sample RAM is user-expandable and consists of either one or two SIMM RAM memory modules. There are also four sockets are for E-MU Sound modules. Do not plug RAM SIMMs into the sockets marked ROM!

The requirements for the RAM SIMM modules are as follows:

- 72-pin SIMM (4 MB 16 MB or 64MB)
- 8 or 9 bits (Mac or IBM)
- 70 nS or faster

The following diagram shows the allowable combinations of SIMMs. The standard Ultra comes with (1) 64 MB SIMM installed. When only one SIMM is installed, use the **RAM B** socket.

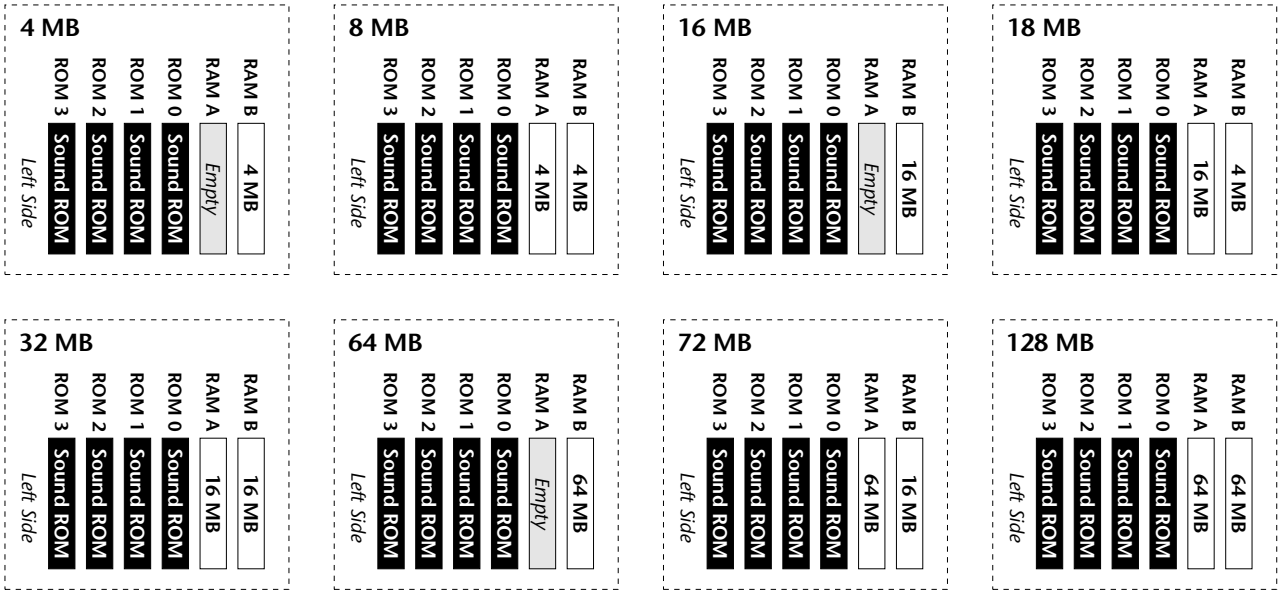

Fig. 1

If the SIMMs are of different size, the smaller SIMM will be divided in half. That is, you will get only half of the memory of the smaller SIMM. You MUST install the larger SIMM in the **RAM A** socket. *(Otherwise the larger SIMM will be divided in half.)*

BEFORE YOU BEGIN, determine the proper locations of the SIMMs you plan to install.

Installing Memory

Before you begin, find a clean, well lit work place.

UNPLUG THE AC POWER CORD BEFORE WORKING ON ULTRA

Ground Work

Installing memory requires that you periodically “Ground” yourself, by touching a grounded object such as a water pipe or a grounded piece of equipment. Grounding yourself prevents the static charge in your body from damaging the sensitive memory chips. When you are asked to “Ground” yourself, simply reach over and touch the metal on the water faucet. Do not walk across the room or across a rug, as this will defeat the purpose of grounding.

☞ Remove the Cover

1. To gain access to the interior of Ultra, the top panel must first be removed. The top panel is attached to the main chassis by means of (7) Phillips head screws There are three screws along the top back of the unit and two in the recesses on both sides.
2. When the screws are removed, lift the metal top FROM THE REAR and lift off. Set the top cover aside in a safe place and put the screws into a cup so they will not get lost. The switching power supply is covered by a metal box. Do not remove this metal cover!

☞ Remove the Old Memory SIMMs (if necessary)

With the front of Ultra facing you, the memory SIMMs are located near the left front of the main board. To remove a SIMM:

3. Ground yourself by touching a grounded object.
4. On each end of the SIMM socket there is a silver or plastic tab. Use a screwdriver or a ball point pen to squeeze the tabs toward the outside of the socket while gently pushing the SIMM toward the right side of the unit. The old SIMM should “hinge” to the right and can now be removed.

☞ Install the New Memory SIMMs

5. Ground yourself by touching a grounded object, then remove the memory SIMM modules from the static protected packaging. Install the SIMM closest to the LEFT side first.
6. Gently set the SIMM deep into the SIMM socket at a 45º angle with the notch toward the back of the unit as shown in figure 2. Without forcing the insertion, let the board rest in the socket as deep as it will go. The chips mounted on the board should face the rear of the unit. See the following diagrams.

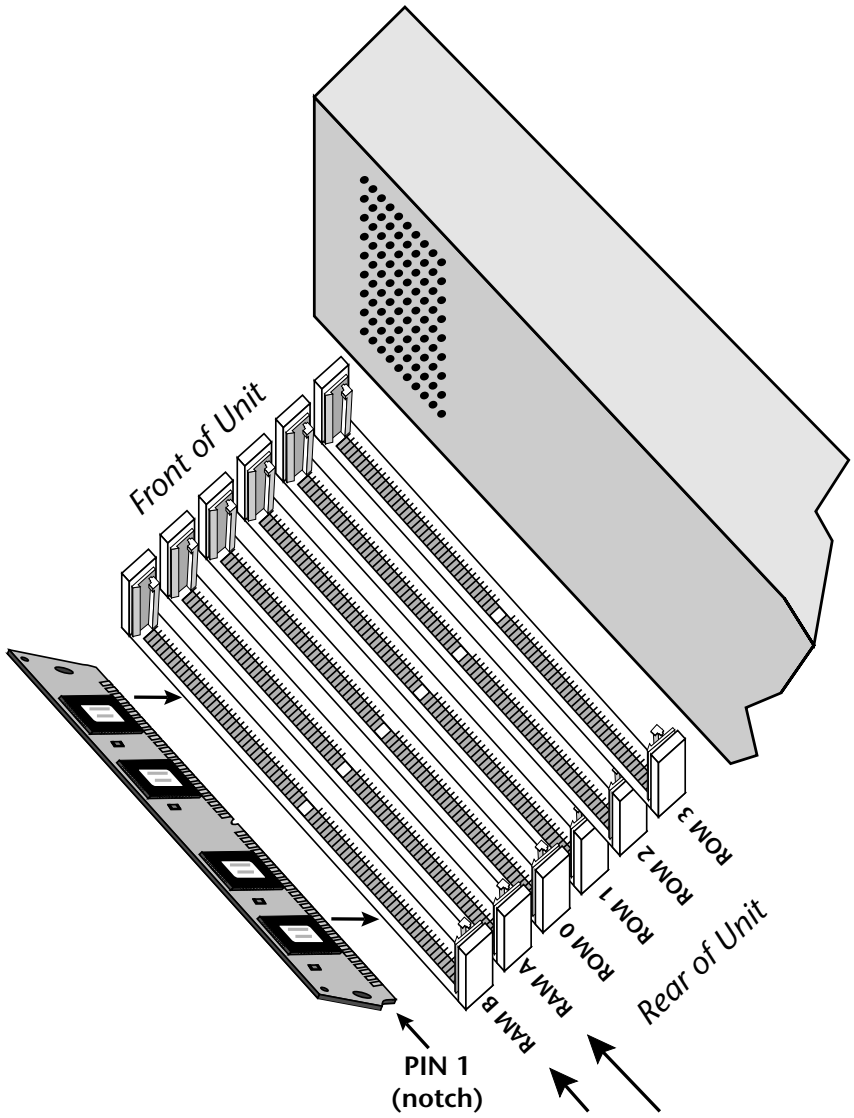

Fig. 2

7. While applying a slight downward pressure on the top of the SIMM to keep it from popping out of the socket, tilt the SIMM board into a vertical position as shown in figure 3. You should hear an audible click. Make sure both sides of the silver tabs have latched.

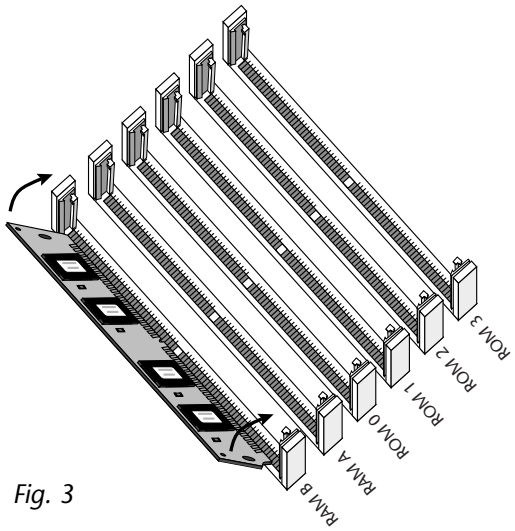

Fig. 3

☞ Reassemble the Unit

8. Tilt the rear of the top cover up a little and slide the front of the top panel under the front panel lip. Lower the rear of the top panel into place.
9. Replace the seven screws. The screws are all identical.

☞ Test It

At this point, the installation is almost finished. Plug in the power cord and turn on power to Ultra. If the display shows the new memory size during boot up, everything is probably OK. It's always a good idea to test the memory anyway. If the unit comes up without showing the proper memory size, you may have installed the SIMMs incorrectly.

10. Activate the **Master** module.
11. Select **Utilities**.
12. Select **Tests.** A pop up window appears asking you to enter the Diagnostics Password. Ah, you've got us now. We'll have to reveal the secret password. Enter the secret password: **1-3-5-8**, then press **OK**. Another row of soft keys appears.
13. Press the **RAM soft key** to begin testing memory. The display may warn you that the test destroys any data currently residing in RAM. Don't worry, this test does NOT affect your hard disk data. Press **OK** to continue.

14. CPU memory will be tested first (cRAM). After four cycles, the sound memory (gRAM) will be tested. Allow this test to run through at least four complete cycles or longer if you want. (This time will vary with the amount of RAM installed.)
15. Press EXIT to abort the test. Any errors will be displayed. If the memory tests bad, you may have incorrectly installed the SIMMs.

A Word of Warning…
Now that you know how to get into the hidden diagnostics, DO NOT run the Automatic or Hard Disk tests which could erase your hard disk!

Problems?

Disconnect power, open the unit, and try re-seating the SIMMs. Make sure that the RAM SIMMs are installed in the sockets labelled RAM, not ROM.

Installing Memory *(e6400, E4X, E4K, E-Synth KYBD)*

The memory is user-expandable and consists of one or two SIMM RAM memory modules. Do not plug RAM SIMMs into ROM sockets! The requirements for the SIMM modules are as follows:

- 72-pin low profile SIMM (4 MB, 16 MB or 64MB)
- 8 or 9 bits (Mac or IBM)
- 70 nS or faster
- No 8 MB or 32 MB SIMMs are allowed in E-Synth!

The charts below show the allowable combinations of SIMMs. Either socket can be used when only one SIMM is installed.

If the SIMMs are of different size, the smaller SIMM will be divided in half. That is, you will get only half of the memory of the smaller SIMM. You MUST install the larger SIMM in the slot towards the rear of the unit.

BEFORE YOU BEGIN, determine the proper locations of the SIMMs you plan to install.

4 MB	Rear
RAM 2	Empty
RAM 1	4 MB
ROM 1	DON'T USE
ROM 2	DON'T USE

8 MB	Rear
RAM 2	4 MB
RAM 1	4 MB
ROM 1	DON'T USE
ROM 2	DON'T USE

16 MB	Rear
RAM 2	16 MB
RAM 1	Empty
ROM 1	DON'T USE
ROM 2	DON'T USE

18 MB	Rear
RAM 2	16 MB
RAM 1	4 MB
ROM 1	DON'T USE
ROM 2	DON'T USE

32 MB	Rear
RAM 2	16 MB
RAM 1	16 MB
ROM 1	DON'T USE
ROM 2	DON'T USE

64 MB	Rear
RAM 2	Empty
RAM 1	64 MB
ROM 1	DON'T USE
ROM 2	DON'T USE

72 MB	Rear
RAM 2	64 MB
RAM 1	16 MB
ROM 1	DON'T USE
ROM 2	DON'T USE

128 MB	Rear
RAM 2	64 MB
RAM 1	64 MB
ROM 1	DON'T USE
ROM 2	DON'T USE

Remove the Old Memory SIMMs (if necessary)

The memory SIMMs are located near the center towards the keyboard. The front of the unit should be facing you. To remove a SIMM:

1. Ground yourself by touching a grounded object.
2. On each end of the SIMM socket, facing toward the rear, there is a little plastic tab. Use a screwdriver or a ball point pen to squeeze the tabs toward the outside of the socket while gently pushing the SIMM toward the rear of the unit. The old SIMM should “hinge” backward and can now be removed.

Install the New Memory SIMMs

1. Ground yourself by touching a grounded object, then remove the memory SIMM modules from the static protected packaging.
2. Insert the SIMM module as shown with the notch indicating PIN 1 on the label side of the socket. The SIMM should fall naturally in place.

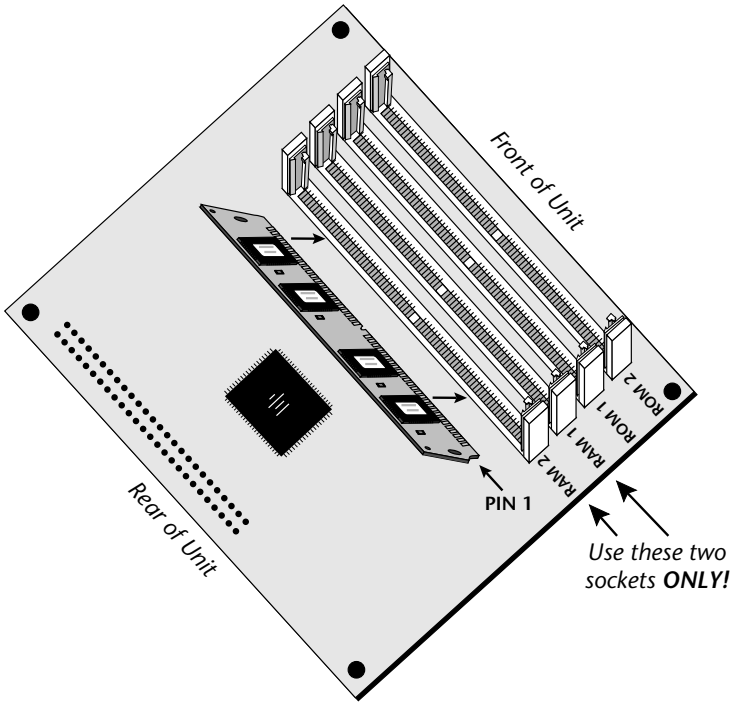

3. Gently set the SIMM deep into the SIMM socket at a 45º angle. One end of the SIMM is notched. This notched end should be on the same side as the RAM 1 and RAM 2 labels. Without forcing the insertion, let the board rest in the socket as deep as it will go.
4. While applying a slight downward pressure on the top of the SIMM to keep it from popping out of the socket, tilt the SIMM board into a vertical position. You should hear an audible click. Make sure both sides of the plastic tabs have latched.

EIV Memory Installation

The memory of the Emulator IV is user-expandable and consists of up to (8) SIMM memory modules. The requirements for the SIMM modules are as follows:

- 30-pin SIMM (4 MB or 16 MB)
- 8 or 9 bits (Mac or IBM)
- 70 nS or faster
- The E-IV uses 16 bit Words, and it takes two 8-bit SIMMs to make a 16-bit word. Therefore, the SIMMs must be installed in pairs. Each pair of SIMMs must be the same size and preferably the same type. No 8 MB SIMMs are allowed in the E-IV!
- The charts below show all the allowable combinations of SIMMs. The standard Emulator IV comes with 8 MB (two 4 MB SIMMs in the sockets toward the rear of the unit). Either 4 MB or 16 MB SIMMs may be added to the other sockets. No combinations other than those shown below are allowed.

BEFORE YOU BEGIN, determine the proper locations of the SIMMs you plan to install.

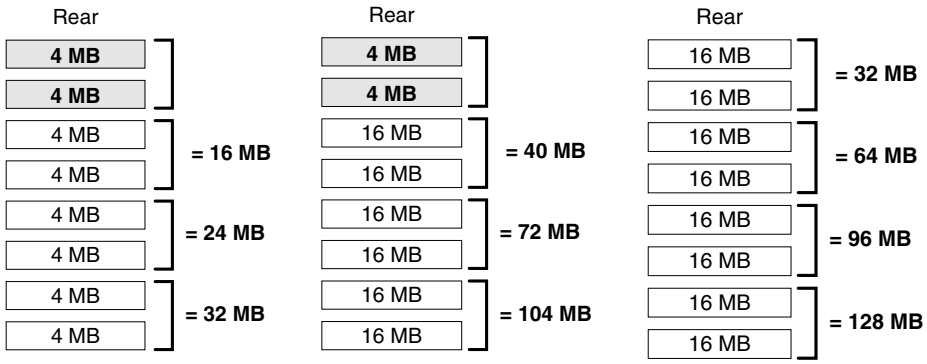

Follow the SIMM installation instructions given on the preceeding pages.

Memory Configuration Charts

Most of the possible memory configurations for each EOS unit are shown in the following charts.

EIV

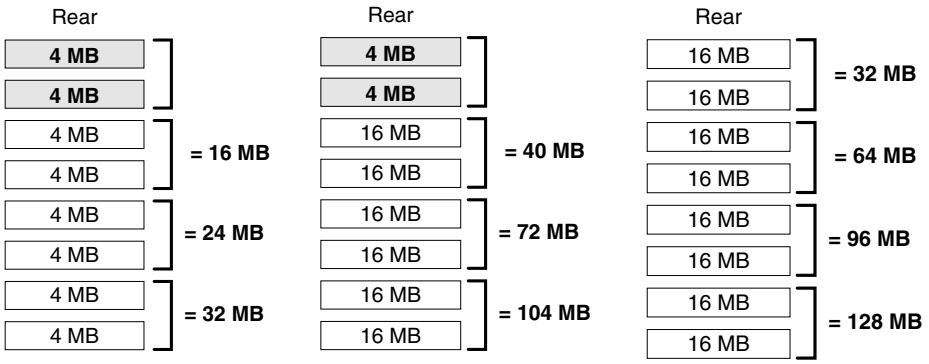

e64

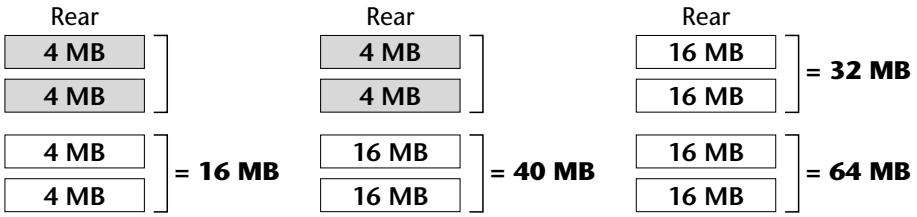

E4X, e6400, E4K, E-Synth

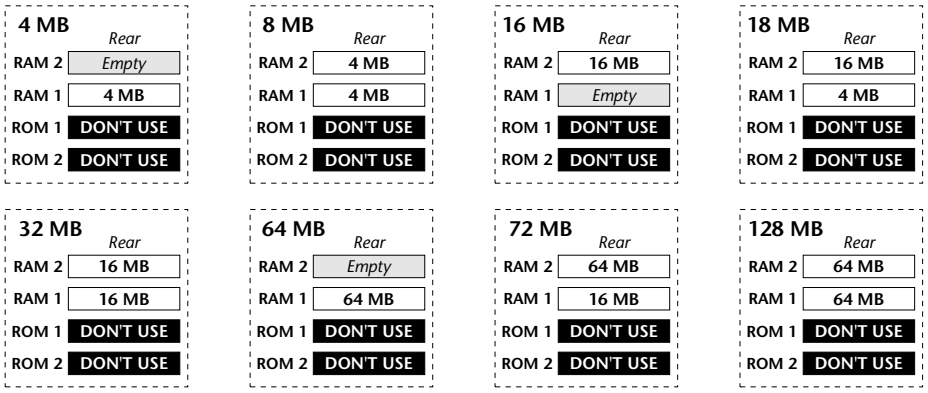

All Ultra Units

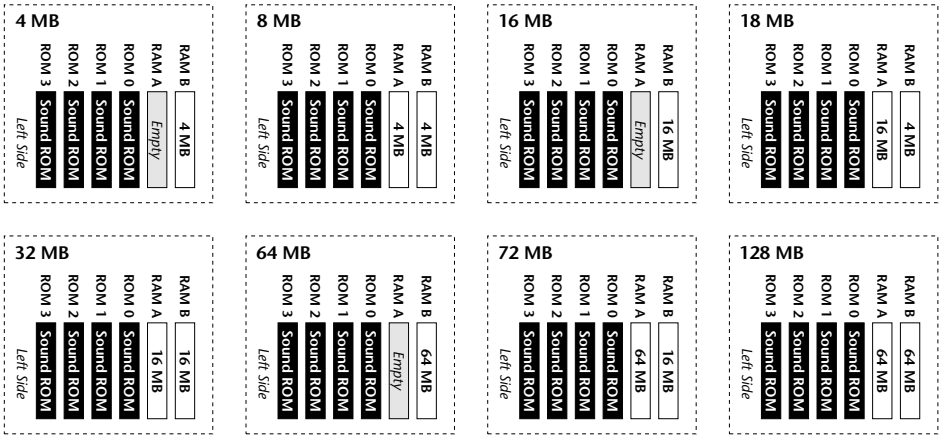

Diagnostics

Before working on EOS, we suggest you first perform a functional test on the unit. Many times a complete functional test reveals important clues to the problem that may have otherwise been overlooked. Try to isolate the problem as much as possible through the operational controls, then go in with your instruments to nail it down. A high quality amplifier and speaker system is also necessary to pick out subtle problems that would otherwise be missed.

Although the microprocessor and output sections should not give you much trouble, certain sections of EOS machines can be more difficult to troubleshoot. If you have isolated the problem to a particular board, a board swap may be in order. Call the E-mu Customer Service department to arrange for a board swap.

BootProm Diagnostics

The bootprom diagnostic tests automatically occur each time you power up an EOS machine. On power-up, all front panel LEDs are initially turned on. As each bootprom diagnostic is completed and passed, the LED goes out. With this in mind, a completely dead CPU will likely have all LEDs lit. If the LEDs don't light when power is turned on, the problem is likely hardware. If a test fails, the corresponding LED does not turn off and the EOS continues with subsequent tests and attempts to boot. The following table lists the LEDs, the test performed, and a brief description of the test.

E4 Ultra BootProm Diagnostics *(All Ultra Units)*

Indicator	**Test**	**Description**
Master LED Off	CPU, CPU Flash	The CPU is running and is able to access CPU Flash
Preset Manage LED Off	DRAM	Memory OK.
Preset Edit LED Off	FPGA configured	FPGA write/read OK.
Disk LED Off	G-Chip Registers	Passes if G-Chip can be written to, read, AND if there is working memory installed.
Sample Manage LED Off	FPGA Register	Passes if FPGA register can be written to. If this test fails the unit goes to Bus Loop. Most likely a Bus problem.
Sample Edit LED Off	LCD	Writes to the LCD.
MIDI LED Off	K-chip	Passes if the Kchip can be written to and read from.
All LEDs Off	Passed	All Tests Passed. Boot screen is displayed.
Floppy Drive Probe	Floppy Disk	EOS checks for the presence of a floppy in the drive. If no, it tries to boot from Flash. If no, it checks back with the floppy.

Bus Loop

On certain boot errors, the code will jump to this test and loop indefinitely. To get this far however, the processor system must be basically running, and data bus D[31:0] and lower address lines A[12:0] must all be working, and upper address lines A[23:13] must at least not be stuck high.

During this loop, the processor will exercise the BD[31:16] and A[23:9] bits so that they can easily be monitored with an o'scope and checked for

shorts/opens: square wave at frequencies doubling every bit should be seen at BD[31:16] and A[23:9].

To force the bus loop to happen, remove the DRAM SIMM and reboot. If the code can run enough to detect the RAM failure, it will then jump to the bus loop test.

An easy place to look at the BD[31:16] bus is on U30 and U31, pins 11 through 18. If any of these pins in not a square wave, that bit is a problem.

If bits BD[23:16] look good but BD[31:24] are all bad, then perhaps a peripheral that uses only BD[31:24] is stuck on because its chip select is stuck asserted. Peripherals that use only BD[31:24] are the SCSI chip U13, the Kchip U61, the floppy chip U58, the LCD, and the FIFO U47. Also, U49 could be bad or its pin 1 or 19 open.

E4 Classic BootProm Diagnostics *(EIV, E4K, E4X, e-64, e6400, E-Synth)*

Indicator	**Test**	**Description**
Master LED Off	CPU,	The CPU is running
Preset Manage LED Off	Multifunction peripheral,	Tests Write/Read to 68901-multifunction peripheral - MIDI, Timer, UART
Preset Edit LED Off	LCD	LCD write/read OK.
Message to LCD - Boot version, etc.	Computer running	Main CPU functions working. Floppy is probed for disk. Flash is loaded into CPU RAM.

Special Diagnostics

EOS contains a number of on-board diagnostic tests. These can be accessed or read from the front panel without even opening the unit! This section provides a description of these diagnostic tests. For step-by-step instructions on how to do these tests, refer to the next section, “EOS Functional Test Procedures.”

EOS’s on-board diagnostic tests are divided into submodules. The following table provides a brief description of each.

Test Name	**Description**
Panel Test	Tests the LCD pixels, buttons, LEDs, encoder and volume pot.
RAM Test	Tests CPU RAM (cRAM) and Sound RAM (gRAM).
Jack Detection Test	Tests the submix output jack.
Serial Test	Tests the MIDI /serial ports.
AutoTest	Cyclically tests CPU RAM, G-chip sound RAM and the SCSI disk (if installed). ***WARNING: Designed for in-house burn-in, this test destroys any and all data on the hard disk***
Hard Disk Diagnostics 1) HD Select Drive 2) HD Read Only 3) HD Write 4) HD Media Defects 5) HD Result 6) HD Checksum	Performs various tests and utilities on the hard disk.
Floppy Disk Diagnostics	Tests the floppy drive for errors and compatibility with other units.
Word Clock Test	Tests the Word Clock hardware.
Effects RAM Test	Tests the Effects RAM.
Sound SIMM Utilities 1) Dup->Flash 2) Compare 3) D10sum 4) D9sum	
Initialize EEPROM	Initializes the EEProm with the factory defaults.

Accessing the On-Board Diagnostics

Many of the Functional Test Procedures are accessed through the Special Diagnostics Submodule.

☞ To access the on-board Diagnostic menu

1. Press the **Master** module button.
2. Press the **Utils** function key.
3. Press the **Tests** function key.
4. The following screen appears:

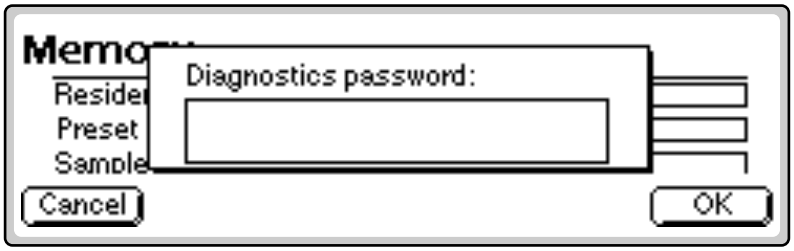

5. Enter the diagnostics password. Psst! The secret password is “1358” (the notes in a major chord). Press **OK**.
6. Another row of function key appears if you have successfully accessed the on-board diagnostics.

Note: *You may have to re-adjust the LCD contrast after performing this test as it resets the contrast to zero.*

Panel Test

The panel test first tests all the pixels on the LCD. First, all pixels are turned on and off for a few seconds, then the backlight is flashed three times. Make sure there are no lines or bad pixels. Next, press each of the buttons on the front panel to display the corresponding operation or button name in the display. Finally, check the Data Entry Control (encoder knob) and the volume control. Turn the knob to display the values from 0 to 36 (one full turn). The volume control should range from 0 to ≈ 230-255. Press the Enter button twice to exit the test.

RAM Test

The RAM test checks and verifies the CPU RAM and the SoundRAM. This diagnostic performs three different tests.

CPU RAM. The CPU RAM test displays the amount o CPU RAM installed (1MB, 4MB), and does a pattern Write/Read comb of the installed RAM. Any errors are displayed on the LCD. This test will run through four passes before advancing to the gRAM test. Press the Enter button to immediately advance to the gRAM tests.

Sound RAM Fixed Test. The Fixed Sound RAM test (gRAM) displays the amount of Sound RAM installed in the unit and does a pattern Write/Read comb of the RAM. This test cycles with a different pattern each time. Let this test cycle through at least 4 passes. Press the Enter button to finish to the next test.

Jack Detection Test

The Jack Detection test checks the submix output jack detection circuitry. When a phone plug is inserted into each submix jack, the lower-case left and right letters change to upper case. In the display shown below, Submix 3-Right has a plug inserted into it. Press DONE to stop the test and return to the diagnostics screen.

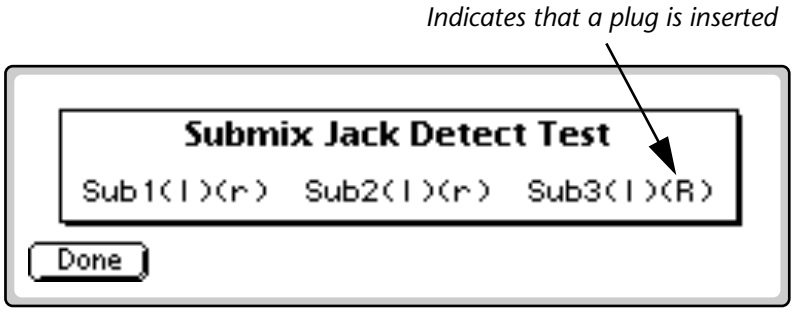

Serial Test

This test writes and reads an AA and then a 55 to the MIDI port. The test waits a reasonable length of time for each response. If there is no response, it records a failure. In order for the test to work, MIDI Out must be connected to MIDI In. The "X-MIDI" button is used to test the MIDI -B port on the Ultra series with the DWAM board installed. The RS-232 test is for testing the RS-232 interface used in development and is not applicable to production units. Press DONE to stop the test and return to the diagnostics screen.

WARNING: *THIS TEST DESTROYS ALL DATA ON THE HARD DISK!!!*

AutoTest

This test was designed for E-mu in-house burn-in. Auto Test cycles continuously between testing CPU RAM, G-chip sound RAM, the SCSI disk (if installed), as well as the floppy disk.

Hard Disk Diagnostics

The Hard Disk Diagnostics menu provides several tests and utilities related to the hard disk in the unit. There are six different hard disk diagnostic tests as described below.

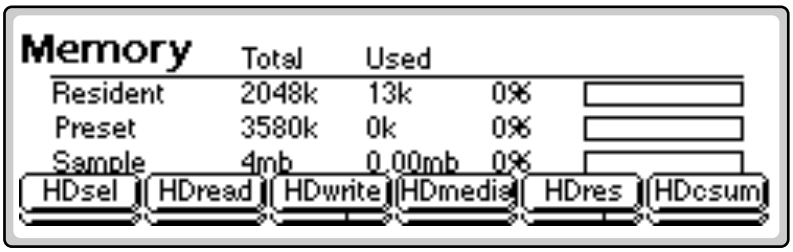

HD Select Drive. (HDSel) Selects any currently mounted drive.

HD Read Only. (HDread) Non-destructive. Exercises (reads) the entire HD media for data read errors. Run continuously. Press and hold ENTER to quit. Exiting the drive in this manner sets the drive error correction to "ON."

HD Write. This diagnostic destroys all data! Exercises the entire hard disk media by writing a test pattern, reading it back, and comparing the two. The drive must be reformatted after this test with the EOS format disk utility.

HD Media Defects (HDmedia). Displays the hard disk's defect list in hex.

HD Result. (HDres) SCSI Sense Key and Sense Code, Sector Number and status of last hard disk operation.

HDcsum. A checksum is calculated by using all the data and passing it through an algorithm to generate a value (the checksum) which is saved. The checksum is recalculated and compared to the saved value.

Floppy Disk Diagnostics

The Floppy Disk Diagnostics consist of two tests

Floppy Read Only. This test continuously reads the entire floppy surface and verifies to a known test pattern. You must use a disk written to previously by the Floppy Write test. All soft errors are logged according to track number, byte number and data compared. This test is useful for read exercising and checking drive to drive compatibility (alignment, etc.).

Floppy Write. Runs continuously. This test writes a test pattern and reads it back, comparing the data. Errors are logged. There are 180 tracks on the floppy (90 tracks/side).

Word Clock Test

Tests the Word Clock Out and In. Connect Word Clock Out to Word Clock In with a BNC jumper cable before running this test. The display reads either Good or Bad.

Word Clock Background

Word clock provides a means of synchronizing multiple digital audio devices so that data can be transferred digitally. All digital devices in a system should run off the same master clock. Devices can be connected in daisy chain fashion (word clock out connected to the next unit's word clock in) in a small system, but a digital studio will normally use a master word clock generator or "House Sync" with a distribution system so that every device receives a phase-coherent and jitter-free word clock.

Word Clock In: Receives word clock (sample clock) from another digital device such as a digital video deck, digital recorder or digital mixer.

Word Clock Out: Sends word clock (sample clock) to another digital recorder. Word clock is always output, whether it is generated by the internal crystal or passed through from the word clock input.

75Ω On/Off: Termination for the word clock input can be switched on or off. Like SCSI, the LAST device in a serial word clock chain should have termination turned **On**.

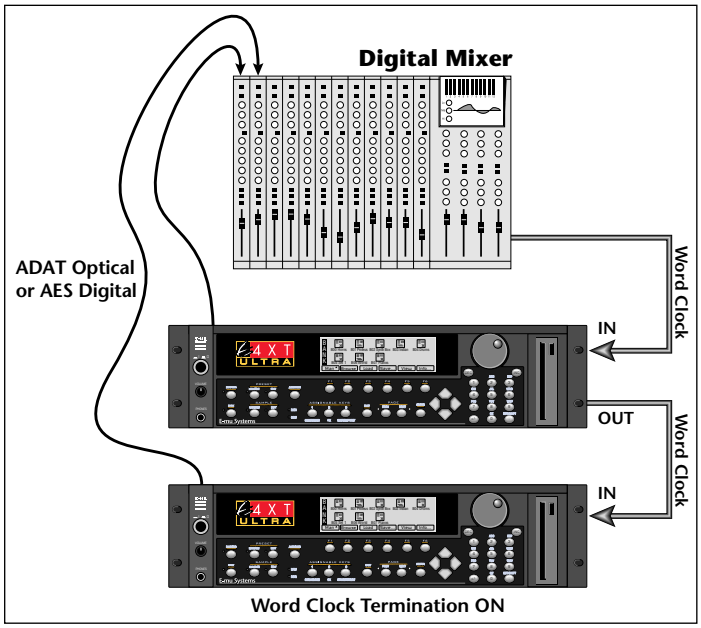

The last device in a Word Clock chain should have Termination ON.

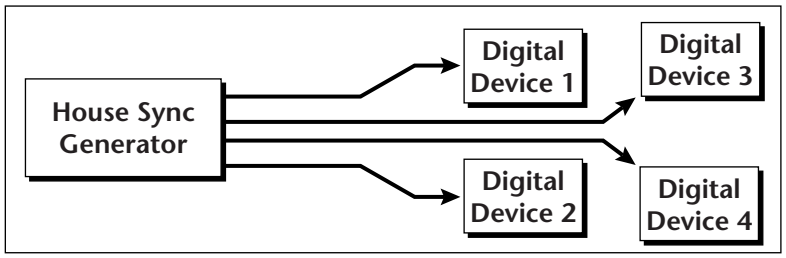

A master word clock generator is preferable for larger digital setups.

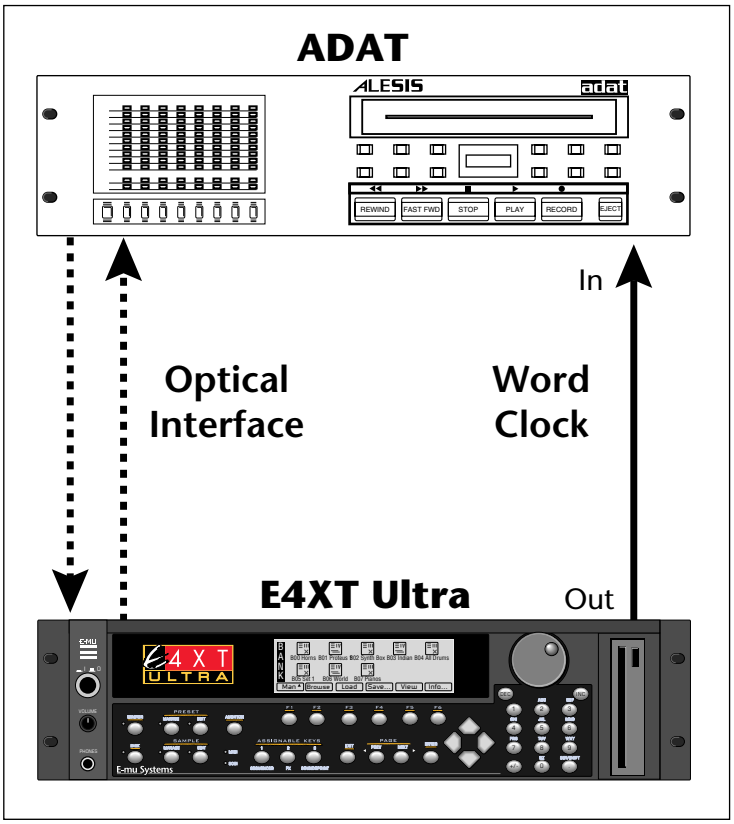

This diagram shows how to connect an E4XT to an Alesis ADAT™ using the optional ADAT interface card. The Word Clock connection is optional, but provides a slightly more stable clock source.

Effects RAM Test

The Effects RAM test writes, then reads from all Effects RAM locations. The display reads either Good or Bad.

Sound SIMM Utilities

This contains four utilities related to Sound ROM or Sound Flash SIMMs.

- **Dup->F**

Writes entire contents of Sound RAM to Flash RAM

- **Compare**

Compares Sound RAM and Flash RAM

- **D10sum**

Displays the checksum of the Flash Slot

- **D9sum**

Displays the checksum of ROM Slot

Initialize EEPROM

This utility initializes EEPROM with the factory defaults. Many of the Master settings are stored in EEPROM.

Power Supply Specifications

EOS machines use switching power supplies. We do not repair these supplies at the factory and do not even have schematics for them. If a supply is defective, contact E-mu customer service at (831) 438-1921, to obtain a new supply.

The power supply automatically switches for 110 or 220 volt operation.

There is one trim pot on the power supply board which simultaneously adjusts +5V and +12V.

Note: Switching supplies will not operate without a load.

Power Supply Header

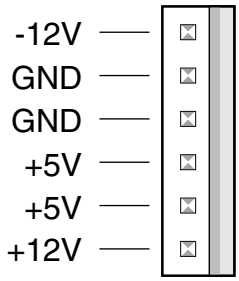

Specifications
Chassis Is Ground

On Power Supply DC Connector
Green wires are Ground

Verify +12V on Violet wire

Verify -12V on Orange wire (-11.7 to -12.3)

Verify +5V on Yellow wire (+4.75 to +5.25)

On Floppy and Hard Disk DC Connectors
Green wire is Ground

Verify +12V on Orange wire

Verify +5V on Yellow wire

±5 Volts to DACs
Verify +5 Volts on Pin 3 of VR2 (+4.75 to +5.25).

Verify -5 Volts on Pin 3 of VR1 (-4.75 to -5.25)

EOS Software History

Version 1.4

Bug Fixes

- Bus Error Crash - Lock Bank & Drive
- Sample feedthrough on power up causes feedback

Version 2.0

Bug Fixes

- Data encoder accelerator is sticky
- Syquest 270M slow boot
- Various CD-ROM Loading bugs. Unable to access Emax CD ROM.
- Screen change in Digital Processing: Loop

Version 2.1

Bug Fixes

- Loads Preset and Sample from Floppy Disk
- Scrub Wheel for manipulating samples in Digital Processing module
- MIDI Receive Program Change On/Off
- SMDI - SCSI Musical Data Interchange for super-fast file transfers.
- PC Support
- Macintosh Support
- EIIIX Compatibility
- Drive Select screen now shows all devices on the SCSI bus by ID number.
- Load/Save now displays bank size
- Controller 32 causes Pitch Bend

Other Improvements:

- SCSI is now faster and compatible with more types of hard disk
- Audition From Disk volume increased
- Improved Doppler/Pan signal quality
- Improved Digital Tuning signal quality
- Improved Data Encoder resolution
- Akai & Emax II Import process improved - Emax II banks imported and merged correctly. All Akai sample rates now imported correctly.
- Mac on SCSI Bus is now renamed “Avoid Host on ID”. This allows you to select the SCSI ID to be avoided. Formerly, this was preset at ID #7.

Version 2.12

- Implements compatibility of new Motorola CPU chips with existing hardware.

Version 3.00

New Features:

- 17 Filter Types
- Assignment Groups
- Sonic Enhancer
- Export Functions
- Velocity Ranges
- Output Boost
- Implementation of the Turbo option card.

Other Features & Improvements:

- Support for NEC brand CD-ROM drives.
- EOS now supports hard disk drives of up to 4 gigabytes.
- Improved operation with Iomega Jaz drives.
- Improved compatibility with non-512 byte/sector hard disks.
- Improved pitch shifting at extreme transpositions.
- Pitch bend range has been increased to ±12 semitones.
- Dynamic Allocation has been removed and replaced with Assignment Group function.
- New realtime control routing - VCF Note-on Q.
- Filter Q can be controlled by the position of a realtime controller at note-on time.
- Finer Ratio Resolution (1/10 of a percent) in the Digital Processing, Time Compression algorithm.
- Improved stereo phase lock in the Digital Processing, Time Compression algorithm.
- Two additional algorithms have been added to the Time Compression and Pitch Change functions.
- Improved trigger button operation response. Now you can play any two trigger buttons polyphonically.

Bug Fixes:

- H-chip filter popping
- G-chip bandwidth rip-off improved
- Trigger button ghosting
- Thermal drift on volume knob
- ESi-32 typo on SCSI ID page

Version 4.01

New Features:

- Word Clock support *(Ultra units only)*
- ADAT output dither *(only when an ADAT I/O card is installed)*
- New Create Sample page with input Dither
- Export Sample with four different formats – E4, EIIIx, .WAV, AIFF
- Avoid Host on ID *(EOS can now be used with Mac, PC or SGI computers)*
- FIR Filter in Sample Edit module
- Bit Converter in Sample Edit module
- Beat Munger in Sample Edit module
- Note-off Truncate feature added to Sequencer Cut/Copy
- Paste Repeat feature added to Sequencer
- Quantize Duration feature added to Sequencer
- 17 LFO waveforms
- 24 PatchCords *(instead of 18)*
- Load WAVE and AIFF files from floppy *(Disk Menu)*
- Drive Sleep feature

Other Features & Improvements:

- Improved Akai conversion and support for Akai S3000
- Support for ADAT optical digital I/0
- Copy Sample now allows copying from the Sample Clipboard
- New Sample Edit menu ordering
- “Fix Size” looping parameter

Version 4.10

New Features:

- Support for Proteus Sound Authoring *(Ultra only)*
- Write SIMM function located under Master, Bank, Author

Other Features & Improvements:

- DVD support. DVD drives should now be recognized properly. They should act just like a removable hard drive, except their icon should have "DVD" on it.
- Orb support. Orb drives should also be recognized, and treated as removable hard drives. They should have an "ORB" on their icon. In testing DVD and Orb, it should also be verified that other devices did not change behavior (particularly CD drives).

Bug Fixes:

- SMDI sample side swapping. This problem should no longer occur under any circumstances
- SMDI - Loop start near sample start/Loop end near sample end. There should no longer be introduced pops and such on samples transferred via SMDI when a loop point is four or fewer samples from sample start/end.

Surface Mount Transistors

Because surface-mount technology is relatively new, these diagrams may be useful in identifying the proper pins of surface-mount transistors and diodes. Both NPN and PNP transistors use the same convention.

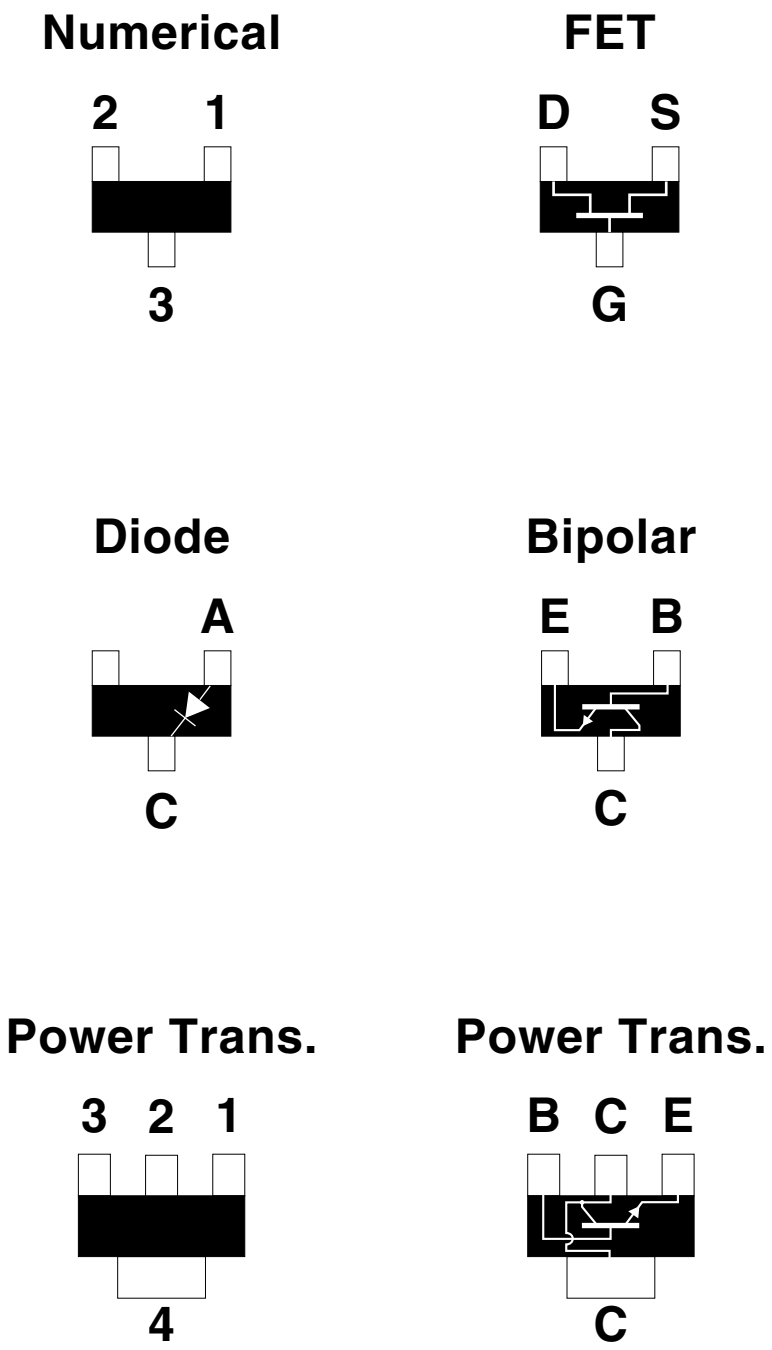

Trouble-shooting Guide

When troubleshooting EOS, common sources of problems are connectors, ribbon cables, the LCD, and broken solder joints. The traces on the EOS boards are very thin. Be extremely careful when desoldering parts. If you are having problems desoldering a component, we suggest that you clip the part out rather than risk damaging the board. Once again, DO NOT attempt to remove and replace a surface-mounted IC if you do not have the experience. Damage to the board resulting from poor soldering is NOT covered under warranty.

Computer

Problem	Cause	Solution
No Lights, No power.	Power supply bad or bad power connector crimp.	Replace supply or repair connector.
No boot. Power OK.	Check front panel diagnostic LEDs. Do you get any LCD message?	Troubleshoot based on diatnostic LEDs. If HD, try floppy software.
CPU Dead.	Check clock, data bus, etc. Does the CPU start to run, If so, suspect peripheral.	Troubleshoot to the basics. RD/WR, data bus, etc.

Digital Distortion

Problem	Cause	Solution
Bad distortion on one output.	Bad DAC.	Replace bad chip.
Low level on one output.	Bad capacitor.	Replace capacitor.
Single channel plays wrong pitch.	G-chip bad.	Swap board.
No output, single channel.	Posible bad DAC, Capacitor or op-amp.	Determine cause and replace bad component.
Bad Sounds.	Check G-chip, H-chips for unsoldered pins.	Carefully resolder pins, or swap board.

Analog

Problem	Cause	Solution
Noise (hiss) on single output.	Possibly bad op-amp or bad capacitor on output filter	Find and replace bad component.
No output or hum, DC.	Output driver blown.	Replace output driver.

Hard Disk

Problem	Cause	Solution
Hard disk doesn't work.	HD may be damaged.	Try disk diagnostics, reformat or replace the hard disk.
Display reads "Disk Not Formatted."	Hard disk my have crashed. External HD cable may be too long or two SCSI devices have the same ID#.	Disconnect all SCSI devices & reboot. May need to reformat HD. Use short SCSI cable. Check SCSI ID numbers.
Display reads "SCSI Error!"	Two SCSI devices have the same ID or a device is not powered on.	Check power to SCSI devices. Change SCSI ID# and check cables.
EOS doesn't recognize external HD.	External HD was turned on after the EOS.	Mount the drive using the Disk Utilities.

Floppy Disk

Problem	Cause	Solution
Intermittent or never loads disks.	Drive may be out of alignment.	Run floppy diagnostics. Have drive realigned or swap drive.

Other

Problem	Cause	Solution
Volume control is out of calibration	ADC temperature drift.	Recalibrate Volume Control after unit has warmed up for 30 min.
Squealing power supply.	Bad decoupling capacitor.	Isolate to board, then find and replace shorted capacitor.
Intermittent power.	Bad connection at power supply.	Clean contacts and reseat power connector.

Another Troubleshooting Tip

Sometimes the little legs of the Gchip(s) will become unsoldered from the circuit board. This can result in "bad" sounds and other digital garbage. To find an unsoldered pin, press down on the pins with a pencil eraser while playing the unit. If the unit returns to normal, you've found it!

EOS Update Checklist

EIV

AP413 Main Board

1. U46 NMI PAL should have IP860a installed.
2. U47 MEM Control PAL should have IP749c installed.
3. 48kHz Digital Rework Mod. – See attached instructions.
4. FS1 & FS2 should have polyswitch fuses installed.

AP437-01 Main Board

1. U46 NMI PAL should have IP860a installed.
2. U47 MEM PAL should have IP749c installed.
3. FS1 & FS2 should have polyswitch fuses installed.

AP437-01 Main Board

1. U46 NMI PAL should have IP860a installed.
2. U47 MEM PAL should have IP749c installed.
3. FS1 & FS2 should have polyswitch fuses installed.

E64

AP437-02 & AP500-02 Main Board

20nS - 55nS CPU RAMs

1. U46 should have IP860a installed.
2. U47 should have IP749c installed.

70nS CPU RAMs

1. U46 should have IP861a installed.
2. U47 should have IP805 installed.

FS1 & FS2 should have polyswitch fuses installed.

E6400, E4X, E-Synth Rack

AP524-00 & AP524-01 Main Board

1. U80 MEM PAL should have IP822d installed.
2. Check the voice board (AP503). It should have 10Ω resistors in locations R14 through R25. If 47Ω resistors are installed, replace with 10Ω.
3. Check for Deviation #3139 which eliminates flickering LCD.
4. Add 100µF 25V cap (CA342) between jumper W7 and resistor R382.
5. Check for Deviation #3210 (LCD requires more contrast current.)
6. Install jumper (JR334) at W6 and 0Ω (RR420) at location R382.
7. Check form Deviation #3092 (LCD backlight voltage too high.)
8. Perform rework of 2 cuts & jumps. (See deviation.)
9. Check U44 MFP. Replace ALL ST SGS Thompson 96 date code parts.

E4K, E-Synth Keyboard

1. U18 on the main board should have IP872a installed.
2. U49 on the main board, should have IP822d installed.
3. Check voice board (AP503) for 10Ω resistors installed in locations R14 through R25. If 47Ω resistors are installed, replace with 10Ω.
4. U28 on AP502 main board should have 74ACTQ153 installed. Replace `HC253 with `ACTQ153.

All EOS Units should have…

1. ".7" firmware or newer for EOS 2.0, EOS 2.5, EOS 2.51, EOS 3.0.
2. Boot ROM rev "1.0h" on E-Synth —1MB Flash must be installed for EOS 3.2 or higher.

   (Note: The Flash Prep disk must be used to install EOS 3.2.)
3. Boot ROM rev "2.0h" requires 2MB Flash for EOS 3.2 or higher.
4. ALWAYS initialize EEPROM and Recalibrate after installing a new version of EOS.

EIV Parts List

Ordering EOS Parts

Parts can be ordered by written order or by phone. When ordering parts, you must order by E-MU part number. The minimum charge for parts orders is $15.00. Emergency rush orders can usually be sent out the same day if the order is received by 11:00am PST. Parts orders can be placed between the hours of 8:30am and 5:30pm PST, Monday through Friday.

E-MU Customer Service Department: (831) 438-1921

Digital PCB

Capacitors

Description	E-mu P/N	Qty
470µF 25V Aluminum Radial	CA330	1
470 pF 50V Ceramic	CC414	2
.01µF 50V Ceramic	CC417	2
.047 µF 50V 10%	CC418	1
.1 µF 50V Ceramic	CC419	117
22pF 50V Ceramic	CC421	2
1000pF 50V Ceramic	CC423	5
4700pF 50V Ceramic	CC425	1
2.2µF 16V Tantalum	CT323	2
10µF 16V Tantalum	CT326	2

Capacitor Locations

Capacitor Location	E-mu Part Number	Capacitor Location	E-mu Part Number
C1	CC419	C2	CC419
C3	CC419	C4	CC419
C5	CC419	C6	CC419
C7	CC417	C8	---
C9	CC418	C10	CC417
C11	CC419	C12	CC419
C13	CC423	C14	CC423
C15	CC419	C16	CC419
C17	CC419	C18	CC419
C19	CT323	C20	CT323
C21	CC419	C22	CC419
C23	CC419	C24	CC419
C25	CC419	C26	CC419
C27	CC419	C27	CC419
C29	CC419	C30	CC419
C31	CC419	C32	CC419
C33	CC419	C34	CC419
C35	CC419	C36	CC419
C37	CC419	C38	CT326
C39	CC419	C42	CA330

Capacitor Location	E-mu Part Number	Capacitor Location	E-mu Part Number
C43-C57	CC419	C57	CC419
C58	CC423	C59	CC419
C60	CC423	C61	CC423
C62-79	CC419	C81-C116	CC419
C117	CC425	C118-C124	CC419
C128	CC419	C129	CC419
C130	CC419	C131	CT326
C132	CC419	C133	CC419
C134	CC419	C135	CC421
C136	CC421	C137	CC419
C138	CC419	C139	CC419
C140	CC414	C143	CC414

Resistors

Description	E-mu P/N	Quantity
1KΩ x 9 Resistor Network, 1/8W, 2%	RN327	1
4.7KΩ x 9 Resistor Network, 1/8W, 2%	RN346	4
2.2KΩ, 1/4W, 5%	RR337	1
33Ω, 1/10W, 5%	RR408	40
47Ω, 1/10W, 5%	RR409	30
150Ω, 1/10W, 5%	RR410	25
270Ω, 1/10W, 5%	RR411	4
1KΩ, 1/10W, 5%	RR412	16
100Ω, 1/10W, 5%	RR422	17
3.9KΩ, 1/10W, 5%	RR431	1
4.7KΩ, 1/10W, 5%	RR432	46
7.5KΩ, 1/10W, 5%	RR433	1
10KΩ, 1/10W, 5%	RR434	14
15KΩ, 1/10W, 5%	RR435	1
30KΩ, 1/10W, 5%	RR437	1
1.6KΩ, 1/10W, 5%	RR440	1
390Ω, 1/10W, 5%	RR450	12
10Ω, 1/10W, 5%	RR453	13
75KΩ, 1/10W, 5%	RR456	47

Resistor Locations

Resistor Location	E-mu Part Number	Resistor Location	E-mu Part Number
R1	RR410	R2	RR432
R3	RR432	R4	RR432
R5	RR432	R6	RR422
R9	RR412	R10	RR422
R11	RR410	R12	RR410
R13	RR432	R14	RR410
R15	RR410	R16	RR410
R17	RR410	R18	RR411
R19	RR410	R20	RR434
R21	RR410	R22	RR432
R23	RR432	R24	RR432
R25	RR432	R26	RR408
R27	RR408	R28	---
R29	RR408	R30	RR408
R35	RR432	R36	RR422
R37	RR412	R38	RR422
R40	RR410	R42	RR410
R43	RR432	R44	---
R45	RR410	R46	RR409
R47	RR422	R48	RR456
R49	RR456	R50	RR456
R51	RR409	R52	RR408
R53	RR456	R54	RR409
R55	RR409	R56	RR409
R57	RR409	R58	RR409
R59	RR422	R60	RR409
R61	RR422	R62-R71	RR409
R72	RR408	R73	RR408
R74	RR408	R75	RR408
R76	RR422	R77	RR408
R78	RR410	R79	RR422
R80	RR422	R81	RR422
R82	RR422	R83	RR410
R84	RR456	R85	RR410
R86	RR456	R87	RR432
R88	RR432	R89-R101	RR456
R102	RR432	R103	RR456
R104	RR432	R105	RR456
R106	RR434	R107	RR434

Resistor Location	E-mu Part Number	Resistor Location	E-mu Part Number
R108	RR434	R109	RR434
R110	RR434	R111	RR432
R112	RR434	R113	RR434
R114	RR434	R115	RR434
R116	RR434	R117	RR409
R118	RR409	R119	RR434
R120	RR409	R121	RR410
R122	RR408	R123	RR410
R124	RR432	R125	---
R126	RR432	R127	RR456
R128	RR456	R129	RR408
R130	RR456	R131	RR456
R132	RR456	R133	RR432
R134	RR410	R135	RR456
R136	RR456	R137	RR408
R138	RR456	R139	RR456
R140	RR456	R141	RR456
R142	RR410	R143	RR456
R144	RR456	R145	RR432
R146-R154	RR456	R155	RR432
R156	RR410	R157-R168	RR453
R169-R179	RR408	R180	RR453
R181-R186	RR408	R187	RR410
R189	RR408	R191	RR410
R193	RR408	R195	RR408
R196	RR432	R197	RR432
R198	RR432	R199	RR432
R200	RR408	R201	RR408
R202	RR432	R203	RR456
R204	RR456	R205	RR432
R206	RR456	R207	RR432
R208	RR408	R209	RR456
R210	RR456	R211	RR410
R212	---	R213	RR408
R214	RR456	R215	RR456
R216	RR456	R217	RR456
R218	RR456	R219	RR456
R220	RR432	R221	RR432
R222	RR432	R223	RR432
R224	RR432	R225	RR412

Resistor Location	E-mu Part Number	Resistor Location	E-mu Part Number
R227	RR432	R228	RR432
R229	RR434	R231-R241	RR450
R242	RR450	R243	RR437
R244	RR435	R245	RR433
R246	RR431	R247	RR337 (kludge) RR440
R248-R256	RR409	R257	RR432
R258	RR412	R259	RR412
R260	RR432	R261	RR412
R262	RR412	R263	RR412
R264	RR434	R265-R272	RR412
R273-280	RR432	R281	RR411
R282	RR422	R283	RR411
R284	RR411	R285	---
R286	RR408	R287	RR410
R288-R291	RR422	R292	RR432
R293	RR432	RN1	RN346
RN2	RN327	RN4	RN346
RN5	RN346	RN6	RN346

Integrated Circuits

Description	E-mu P/N	Quantity
G2.0-chip, Sound Engine	IC402	2
H1.5-chip, Digital Filter	IC413	4
Digital Audio Transmitter	II367	1
Digital Audio Receiver	II372	1
82078 Floppy Disk Controller	II382	1
85C80 SCSI Controller	II383	1
9x Active SCSI Terminator	IL357	2
93C46 64 x 16 EEPROM	IM400	1
68C020 25 MHz CPU	IM405	1
128 x 8 SRAM ≤35nS	IM407	8
MFP 68901 PLCC-52	IM408	1
1K x 9 FIFO, ≥40nS	IM413	1
Programmed PLD - LMEM 6300	IP749	1
Programmed PLD - Sample 6300	IP751	1
Programmed PLD - ChipSel 6300/6400	IP860	1
74ACT138, 3 to 8 Demux	IT426	3
K-Chip PLCC-68	IT433	1

Description	E-mu P/N	Quantity
74ACT244 Octal Buffer/Driver	IT434	1
74ACT074 Dual Flip-Flop	IT439	4
74HCT14 Hex Inverter	IT440	2
74ACTQ04 Hex Inverter	IT441	1
74ACT153 2 x 4 Multiplexer	IT442	3
74ACT125 Quad Buffer	IT443	1
74ACTQ16244 Buffer/Driver	IT444	4
74ACTQ16245 Xceiver	IT445	3
74ACTQ16374 Octal D Flip-Flop	IT446	4
74ACT299 Shift Register	IT447	1
74VHCT125 Quad Buffer	IT460	1

Integrated Circuit Locations

IC Location	E-mu Part Number	IC Location	E-mu Part Number
U1	IT460	U3	II383
U4	IL357	U5	IL357
U6	IT440	U7	II367
U8	II372	U9	IT447
U10	IM413	U12	IT439
U15	IT442	U16	IT439
U17	IT439	U18	IT442
U19	IT444	U20	IP751
U21	IT440	U22	---
U23	IT439	U24	IT442
U25	IT434	U26	IM400
U27	IT443	U28	IC402
U29	IC402	U30	IC413
U31	IC413	U32	IT446
U33	IM408	U34	IT441
U35	IT444	U36	IT445
U37	IT444	U38	IT444
U39	IT446	U40	IT426
U41	IT426	U42	IT426
U43	IC413	U44	IT446
U45	IM405	U46	IP860
U47	IP749	U48	IC413
U49	IM407	U50	IM407
U51	IM407	U52	IM407
U53	IT433	U54	IT446

IC Location	E-mu Part Number	IC Location	E-mu Part Number
U55	IT445	U56	IT445
U57	IM407	U58	IM407
U59	IM407	U60	IM407
U61	II382		

Other Components

Description	E-mu P/N	Quantity
SMD914 Switching Diode	DD316	13
6.8V Zener Diode	DD325	1
SBR Diode 1.0A 40V	DD326	1
PC900 Iso-Optolator	OE302	1
2N3906 PNP Transistor	QQ308	2
Polyswitch Fuse	ZF309	2
Inductor, 750Ω @ 100 MHz, Ferrite	ZI306	6
EMI Filter, L-C, Common Mode, 3-pin	ZI315	4
133Ω @ 100 MHz Inductor	ZI316	4
65Ω @ 100 MHz Inductor	ZI319	4
AES Digital Audio Transformer, 1:1	ZI320	1
Inductor, >1KΩ @ 100MHz	ZI323	4
DC-AC Inverter for LCD	ZV313	1
16 MHz Xtal Oscillator	ZX314	1
24 MHz Xtal Oscillator	ZX315	1
45.1584 MHz Xtal Oscillator	ZX316	1
49.152 MHz Crystal Oscillator	ZX317	1

Other Component Locations

Component Location	E-mu Part Number
D1	DD316
D2	DD326
D3-D10	DD316
D11	DD325
D12-D15	DD316
FS3	ZF309
FS4	ZF309
L1	ZI306

Component Location	E-mu Part Number
L2	ZI315
L3	ZI315
L4-L7	ZI306
L8	ZI319
L9	ZI319
L10	ZI315
L11	ZI319
L12	ZI319
L13	ZI306
L14	ZI315
L15-L18	ZI316
Q1	QQ308
Q2	QQ308
T1	ZT320
U2	OE302
U13	ZX314
U14	ZX316
U22	ZX317
VR1	ZV313
Y2	ZX315

Connectors

Description	E-mu P/N	Quantity
Male XLR Audio Connector, Rt Angle	JA313	1
Female XLR Audio Connector, Rt Angle	JA314	1
SMD Socket, PLCC-44	JC357	3
72-pin SIMM socket, Metal Latch	JC361	2
30-pin SIMM Socket	JC362	4
5-position, Right Angle, Triform	JI327	1
5-pin DIN Socket, Right Angle, Shielded	JI329	1
SCSI Connector, Shielded, Right Angle	JI332	2
Header, Power, .100 x 14, Locking	JP330	1
50-pin Ribbon Cable Header	JR327	2
60-pin Ribbon Cable Header	JR328	1
2 x 10 Header .1 Cntr	JR333	1
Header Shunt	JR334	2
1 x 2 Header	JR335	1
34-pin Dual Row Header	JR338	4

Description	E-mu P/N	Quantity
5 position, 2mm Header	JR353	1
3-Position Locking Header	JR360	2
2 x 4 Header, .1 center, Alum.	JR371	2

Connector Locations

Connector Location	E-mu Part Number
CN1	JI329
CN2	JA313
CN3	JA314
CN4	JI327
CN5	JI332
CN6	JI332
CN9	JR328
CN10	JR338
CN11	JR353
CN12	JR338
CN14	JR327
CN15	JR327
CN16	JP330
CN17	JC362
CN18	JC362
CN19	JC362
CN20	JC362
CN22	JR360
CN23	JC361
CN24	JR338
CN27	JC361
CN28	JR338
CN29	JR333
CN30	JR360
CN31	JR371
U20	JC357
U46	JC357
U47	JC357
W1	JR335
W8	JR334
W9	JR334

Analog PCB

Capacitors

Description	E-mu P/N	Qty
10 µF, 25V, Aluminum, Radial	CA325	4
47 µF, 16V, Aluminum, Radial	CA326	2
470 µF, 25V, Aluminum, Radial	CA330	1
3.3 pF, 50V, Ceramic	CC410	4
10 pF, 50V, Ceramic	CC411	2
68 pF, 50V, Ceramic	CC412	2
100 pF, 50V, Ceramic	CC413	2
680 pF, 50V, Ceramic	CC415	9
3900 pF, 50V, Ceramic	CC416	8
.01µF, 50V, Ceramic	CC417	8
.047 µF, 50V, Ceramic	CC418	6
.1 µF, 50V, Ceramic	CC419	41
2.2 µF, 16V, Tantalum	CT323	1
10 µF, 16V, Tantalum	CT326	14
47 µF, 16V, Tantalum	CT327	8

Capacitor Locations

Capacitor Location	E-mu Part Number	Capacitor Location	E-mu Part Number
C1	CA325	C2	CA325
C3	CC419	C4	CA325
C5	CA325	C6	CC410
C7	CC419	C8	CC419
C9	CC419	C10	CC415
C11	CC410	C12	CT323
C13	CA330	C14	CC417
C15	CC415	C16	CC419
C17	CC419	C18	CC415
C19	CC419	C20	CC417
C21	CC419	C22	CC417
C23	CC415	C24	CC419
C25	CC419	C26	CC415

Capacitor Location	E-mu Part Number	Capacitor Location	E-mu Part Number
C27	CC419	C28	CC417
C29	CC419	C30	CC417
C31	CC415V	C32	CC419
C33	CC419	C34	CC415
C35	CC419	C36	CC417
C37	CC419	C38	CC417
C39	CC415	C40	CC419
C41	CC419	C42	CC415
C43	CC419	C44	CC417
C45	CC419	C46	CC411
C47	CC419	C48	CC419
C49	CC411	C50	CC419
C51	CC410	C52	CC419
C53	CC419	C54	CC419
C55	CC410	C56	CC419
C57	CC419	C58	CC419
C59	CT326	C60	CC416
C61	CT326	C62	CC419
C63	CC416	C64	CC419
C65	CT326	C66	CC416
C67	CT326	C68	CC419
C69	CC416	C70	CC419
C71	CT326	C72	CC416
C73	CT326	C74	CC419
C75	CC416	C76	CC419
C77	CT326	C78	CC416
C79	CT326	C80	CC419
C81	CC416	C82	CA326
C83	CT327	C84	CC418
C85	CC413	C86	CC412
C87	CT327	C88	CC418
C89	CC412	C90	CC413
C91	CA326	C92	CT327
C93	CT326	C94	CC419
C95	CC419	C96	CT326
C97	CC419	C98	CC419
C99	CT326	C100	CT326

Capacitor Location	E-mu Part Number	Capacitor Location	E-mu Part Number
C101	CT327	C102	CT326
C103	CT327	C104	CT326
C105	CC419	C106	CC418
C107	CT327	C108	CC418
C109	CT327	C110	CT327
C111	CC418	C112	CC418

Resistors

Description	E-mu P/N	Quantity
10KΩ x 9 Resistor Network, 2%	RN324	1
1.33KΩ, 1/10W, 1%	RP389	16
2.37KΩ, 1/10W, 1%	RP390	8
2.67KΩ, 1/10W, 1%	RP391	8
10KΩ, 1/10W, 1%	RP392	16
100KΩ, 1/10W, 1%	RP393	2
470Ω, 1/10W, 5%	RR106	2
1KΩ, 1/10W, 5%	RR305	2
33Ω, 1/10W, 5%	RR359	1
10Ω, 1/10W, 5%	RR393	3
150Ω, 1/10W, 5%	RR410	5
270Ω, 1/10W, 5%	RR411	3
1KΩ, 1/10W, 5%	RR412	40
27KΩ, 1/10W, 5%	RR413	4
100KΩ, 1/10W, 5%	RR414	3
150KΩ, 1/10W, 5%	RR415	1
300KΩ, 1/10W, 5%	RR416	8
330KΩ, 1/10W, 5%	RR417	2
1MΩ, 1/10W, 5%	RR418	1
10MΩ, 1/10W, 5%	RR419	8
0Ω, 1/10W, 5%	RR420	8
470Ω, 1/10W, 5%	RR421	16
15KΩ, 1/10W, 5%	RR435	1
4.7KΩ, 1/10W, 5%	RR448	2
100KΩ, Trimpot, 4mm, 1 turn	RT313	8
22Ω, 1/2W, 10%	RW307	2

Resistor Locations

Resistor Location	E-mu Part Number	Resistor Location	E-mu Part Number
R1	RR359	R2	RR411
R3	RR106	R4	RR413
R5	RP392	R6	RP392
R7	RR413	R8	RR413
R9	RP392	R10	RR413
R11	RP392	R12	RP392
R13	RP392	R14	RR415
R15	RR414	R16	RR418
R17	RR414	R18	RP392
R19	RP392	R20	RR414
R21	RR421	R22	---
R23	RP390	R24	RR421
R25	RP391	R26	RR421
R27	RR421	R28	RP391
R29	RP390	R31	RR421
R33	RP390	R34	RR421
R35	RP391	R36	RR421
R37	RR421	R38	RP391
R39	RP390	R41	RR421
R43	RP390	R44	RR421
R45	RP391	R46	RR421
R47	RR421	R48	RP391
R49	RP390	R51	RR421
R53	RP390	R54	RR421
R55	RP391	R56	RR421
R57	RR421	R58	RP391
R59	RP390	R60	---
R61	RP393	R62	RR106
R63	RP393	R64	RP392
R65	RP392	R66	RP392
R67	RP392	R68	RR411
R69	RW307	R70	RW307
R71	RR411	R72	RR420
R73	RR416	R74	RT313
R76	RP389	R77	RP389
R78	RR419	R79	RR416
R80	RT313	R82	RR419
R83	RP389	R84	RP389
R85	RR420	R86	RR420

Resistor Location	E-mu Part Number	Resistor Location	E-mu Part Number
R87	RR416	R88	RT313
R90	RP389	R91	RP389
R92	RR419	R93	RR416
R94	RT313	R95	RR420
R97	RR419	R98	RP389
R99	RP389	R100	RR420
R101	RR416	R102	RT313
R104	RP389	R105	RP389
R106	RR419	R107	RR416
R108	RT313	R109	RR420
R111	RR419	R112	RP389
R113	RP389	R114	RR420
R115	RR416	R116	RT313
R118	RP389	R119	RP389
R120	RR419	R121	RR416
R122	RT313	R123	RR420
R125	RR419	R126	RP389
R127	RP389	R128	RR410
R129	RP392	R130	RR417
R131	RR410	R132	RR393
R133	RP392	R134	RR435
R135	RP392	R136	RR393
R137	RR417	R138	RR410
R139	RP392	R140	RR410
R141	RR305	R142	RR305
R143	RR448	R146	RR410
R147	RR448	R148	RR393
RN1	RN324		

Integrated Circuits

Description	E-mu P/N	Quantity
16-bit Stereo, ∑Δ, Analog-Digital Converter	II376	1
18-Bit Serial DAC	II379	8
7524 8-bit MDAC	II380	2
7905 -5V Regulator, 1A	IL112	1
7805 +5V Regulator, 1A	IL307	1
5532 Dual BiFET, OpAmp, SO8	IL326	1
SSM2142 Balanced Line Driver	IL351	8

Description	E-mu P/N	Quantity
Dual BiFET, Lo-Noise OpAmp, SO8	IL361	8
74HC244 Octal Buffer, SOL-20	IT438	2

Integrated Circuit Locations

IC Location	E-mu Part Number	IC Location	E-mu Part Number
U1	IL326	U2	IL361
U3	IL361	U4	IL351
U5	IL361	U6	IL351
U7	IL351	U8	IL361
U9	IL351	U10	IL351
U11	IL361	U12	IL351
U13	IL351	U14	IL361
U15	IL351	U16	IL361
U17	II380	U18	II380
U19	IL361	U20-U27	II379
U28	IT438	U29	II376
VR1	IL307	VR2	IL112

Other Components

Description	E-mu P/N	Quantity
1N914 Small Signal Diode	DD301	2
SMD914 Switching Diode	DD316	2
Zener Transient Suppressor Bi-Dir	DD324	16
4-40 Kepf Nut	HN304	4
4-40 x 3/8” Phillips Screw	HS302	4
MPS5172 NPN Transistor	QQ302	2
2N3906 PNP Transistor	QQ307	2
2907A PNP Transistor SOT-223	QQ314	1
2222A NPN Transistor, switching, SOT-223	QQ315	1
NPN Power Darlington Transistor 10-220	QQ316	1
PNP Power Darlington Transistor 10-220	QQ317	1
MPSA16 NPN Switching Transistor	QQ320	20
Heatsink, Black Anodized, TO-220	ZE324	2
750Ω @ 100MHz Inductor	ZI306	4

Other Component Locations

Component Location	E-mu Part Number
D1-D2	DD316
D3-D18	DD324
D19-D20	DD301
L1-L4	ZI306
Q1	QQ314
Q2	QQ315
Q3-Q18	QQ320
Q19	QQ302
Q20	QQ307
Q21	QQ302
Q22	QQ307
Q23	QQ316, HN304, HS302
Q24	QQ317, HN304, HS302
Q25-Q28	QQ320
VR1, VR2	HN304, HS302, ZE324

Connectors

Description	E-mu P/N	Quantity
1/4” Audio Jack, Tip=clsd, Ring=Opn, PCMT	JA309	10
Male Audio XLR Connector, PCMT	JA313	2
60-pin Ribbon Cable Header	JR328	1
Header, 3-pin, Locking	JR360	2

Connector Locations

Connector Location	E-mu Part Number
CN1	JR328
CN2	JR360
J1-J2	JA313
J3-J12	JA309

EIV Front Panel

Connectors

Description	E-mu P/N	Quantity
1/4” Stereo Audio Jack, Rt Angle (hdphone)	JA317	1
PWR Conn, .1 x 3	JP387	1
IDC Socket, .100 x 3	JR361	1
Ribbon Cable Socket, 20-pin, keyed	JR331	1
Header, 2 x 10, .1 center	JR333	1
3-pin Header, .1 center, Rt Angle, Locking	JR372	2
IDC Connector, 3-pin, 2mm, Rt Angle	JR373	1

Other Components

Description	E-mu P/N	Quantity
Lens Assembly, 240 x 64 Display	AM102	1
Ellipse Key printed “0”	AM105-00	1
Ellipse Key printed “1”	AM105-01	1
Ellipse Key printed “2”	AM105-02	1
Ellipse Key printed “3”	AM105-03	1
Ellipse Key printed “4”	AM105-04	1
Ellipse Key printed “5”	AM105-05	1
Ellipse Key printed “6”	AM105-06	1
Ellipse Key printed “7”	AM105-07	1
Ellipse Key printed “8”	AM105-08	1
Ellipse Key printed “9”	AM105-09	1
Ellipse Key printed “INC”	AM107-00	1
Ellipse Key printed “DEC”	AM107-01	1
Ellipse Key printed “+/-”	AM107-02	1
Ellipse Key printed “.”	AM107-03	1
Front Panel Mounting Plate	EM483	1
Volume Pot Mounting Bracket	EM459	1
Encoder Support Knob	EM504	1
3U high Front Panel Bezel	EP416-01	1
Ball Bearing (Encoder)	HG001	1
4-40 Kepf Nut	HN304	1
7mm Nut	HN313	1
6-32 x 1/4 Phillips Screw	HS353	1
#4 x 1/4 Phillipws, Plastiloc Screw	HS401	1

Description	E-mu P/N	Quantity
4-20 x 3/8 Plastic Phillips Screw	HS431	1
#8 Flat Nylon Washer	HW325	1
Washer, .287 x .475 x .20 , Zinc	HW443	1
Red LED	LP302	9
Green LED	LP308	2
240 x 64 LCD with Backlight	LP326	1
50KΩ Potentiometer (Volume)	RC327	1
10KΩ, 1/4W, 5% Resistor	RR309	2
Momentary SPST Switch Without Cap	SW340	38
Rotary Encoder, 36 Det, 9 Cyc/D-shaft	SW335	1
Plastic Panel Overlay (Button Labels)	ZL455	1
Lens Gasket	ZR345	1

Final Assembly

Components

Description	E-mu P/N	Quantity
Headphone Cable	AC355	1
SCSI Cable	AC368	1
Cable, Encoder Interface	AC369	1
Cable, Digital to Analog Board	AC375	1
Cable, Front Panel Ribbon	AC376	1
Floppy Data Cable	AC378	1
AC Power Harness	AC379	1
Cable, Fan Power	AC381	1
Cable, LCD Backlight Power	AC382	1
Syquest Power Cable (optional)	AC386	1
DC Power Cable - Fan	AC391	1
Isodamp Spacer	EM486	4
6-32 x 7/16 Phillips Screw	HS434	4
Front Panel Overlay Base	HT106	1
Washer, #6 3/80DX.30, Flat	HW332	4
AC Receptacle, 10A, 250V	JP386	1
6A Power Switch, DPST	SW341	1
112V DC Fan, 40mm, 4500 RPM	ZE333	1
Rubber Grommet, Grooved	ZR344	1
Isodamp Grommet (HardDisk Drive)	ZR347	4

Cables

Description	E-mu P/N	Quantity
AC Power Cable	AC413	1
SCSI Interface Cable	AC368	1
Floppy Data Cable	AC378	1
Syquest Power Cable	AC386	1
DC Harness	AC393	1
Pitch/Mod Wheel Cable	AC394	1
Keybaord Interface Cable, 16 -pin	AC395	1
Keybaord Interface Cable, 20 -pin	AC396	1
Front Panel Interface Cable	AC397	1
AC Cable	AC398	1
Keyboard Pressure Cable	AC399	1
3” Ribbon Cable, IDC	AC401	1
7” Ribbon Cable, IDC	AC402	1
7.5” Ribbon Cable, IDC	AC405	1
Power Cord (USA)	WC307	1 or
Power Cord (Western Europe)	WC308	1 or
Power Cord (UK)	WC327	1
MIDI Cable, 10 ft.	WC309	1

Miscellaneous

Description	E-mu P/N	Quantity
Lens Assembly w/Bezel	AM123	1
Adhesive Tape, .025” thick x 1/4”	BS418	3.87”
1N914 Small Signal Diode	DD301	8
Rack Ears, 3U High	EM477-02	2
Top Rack Metal Cover	EM478	1
Power Supply Cover	EM480	1
Option Port Cover Plate	EM482	3
Rack Chassis Base	EM505	1
Enclosure, Channel KYBD Strip w/silkscreen	EM510-03	1
Keyboard Control Panel, 6900	EM511	1
Arrow Button	EP417	4
Button Cap, Black	EP418	23
Power Button Extension	EP419	1
Black Encoder Knob	EP421	1
Power Switch Cap	EP422-01	1

Description	E-mu P/N	Quantity
Encoder Knob	EP497	1
Slider Cap	EP500	5
Slider Bezel, 45mm	EP501	5
Encoder Knob Bezel	EP502	1
Cable Stickdown	HC121	1
Cable Tie-wrap	HC302	13
Volume Knob	HK341	1
Nut, 9mm, ID 11mm, A/F, .75TP	HN331	1
4-40 x 1/4 Phillips Screw	HS352	4
6-32 x 1/4 Phillips Screw	HS353	16
Power Cord, US	WC307	1
Power Cord, Western Europe	WC308	1
10-foot MIDI Cable	WC309	1
Power Cord, UK/HK	WC327	1
Washer, .275ID x .500 x .062, Nylon	HW442	1
Finger Guard for Fan	ZE334	1
Flat Cable RFI Supression Core	ZI321	1
Rubber Wheel Cushion	ZR323	2
Vinyl Feet	ZR346	4
Red Felt Strip, 1/4”W x 43”L, w/adhesive	ZR349	1
Foot With Push Rivet	ZR346	4
Power Supply Insulator	ZR353-01	1
15W 100-250VAC Power Supply	ZV315	1

E4K Parts List

Ordering EOS Parts

Parts can be ordered by written order or by phone. When ordering parts, you must order by E-MU part number. The minimum charge for parts orders is $15.00. Emergency rush orders can usually be sent out the same day if the order is received by 11:00am PST. Parts orders can be placed between the hours of 8:30am and 5:30pm PST, Monday through Friday.

E-MU Customer Service Department: (831) 438-1921

Digital PCB

Capacitors

Description	E-mu P/N	Qty
470µF, 25V, Aluminum, Radial	CA330	2
10 pF, 50V, Ceramic	CC411	1
470 pF, 50V, Ceramic	CC414	2
.01µF, 50V, Ceramic	CC417	62
.047µF, 50V, 10%	CC418	1
.1µF, 50V, Ceramic	CC419	37
22pF, 50V, Ceramic	CC421	2
.022µF, 50V, Ceramic	CC433	1
2.2µF, 16V, Tantalum	CT323	3
10µF, 16V, Tantalum	CT326	3

Capacitor Locations

Capacitor Location	E-mu Part Number	Capacitor Location	E-mu Part Number
C1	CC414	C2	CC414
C3	CC419	C4	CC419
C5	CT323	C6	CC419
C7	CC417	C8	CC417
C9	CT326	C10	CC417
C11	CC417	C12	CC417
C13	CC419	C14	CC419
C15	CC417	C16	CC419
C17	CT323	C18-C36	CC417
C37	CC418	C38	CC419
C39	CC417	C40	CC417
C41	CC419	C42	CC417
C43	CC419	C44	CC419
C45	CC417	C46	CC419
C47	CC419	C48	CC419
C49	CC419	C50	CC417
C51	CC417	C52	CC417
C53	CC419	C54	CC419
C55	CC417	C56	CC417

Capacitor Location	E-mu Part Number	Capacitor Location	E-mu Part Number
C57	CC417	C58	CC419
C59	CC419	C60	CC419
C61	CC419	C62	CT323
C63	CC417	C64	CT326
C65	CC417	C66	CC417
C67	CC417	C68	CC417
C69	CC419	C70	CC417
C71	CC417	C72	CC417
C73	CC411	C74	CC417
C75	CC417	C76	CC419
C77	CC419	C78	CC417
C79	CC417	C80	CC433
C81	CC417	C82	CT326
C83	CC417	C84	CC417
C85	CC417	C86	CC419
C87	CC417	C88	CC417
C89	CC417	C90-C96	CC419
C97	CC417	C98	CC419
C99	CC417	C100	CA330
C101	CC419	C102	CC419
C103	CC419	C104	CC421
C105	CC421	C106	CC419
C107	CC417	C108	CC417
C109	CC419	C110	CC417
C111	---	C112	CC417
C113	CC417	C114	CC417
C115	CA330	C116	---

Resistors

Description	E-mu P/N	Quantity
47Ω, 1/10W, 5%	RR409	52
150Ω, 1/10W, 5%	RR410	9
270Ω, 1/10W, 5%	RR411	9
1KΩ, 1/10W, 5%	RR412	15
100Ω, 1/10W, 5%	RR422	8
4.7KΩ, 1/10W, 5%	RR432	50
10KΩ, 1/10W, 5%	RR434	14
390Ω, 1/10W, 5%	RR450	5
75KΩ, 1/10W, 5%	RR456	59

Resistor Locations

Resistor Location	E-mu Part Number	Resistor Location	E-mu Part Number
R1	RR450	R2	RR432
R3	RR450	R5	RR410
R6	RR410	R8	RR410
R9	RR410	R10	---
R11	RR411	R12	RR410
R13	RR450	R14	RR412
R15	RR456	R16	RR456
R17	RR434	R18	RR409
R19	RR456	R20	RR409
R21	RR409	R22-R28	RR432
R29	RR412	R30	RR409
R31	RR409	R32	RR409
R33	RR409	R34	RR409
R35	RR409	R36	RR432
R37	RR432	R38	RR409
R39	RR432	R40	RR409
R41-R45	RR432	R46	RR432
R47	RR412	R48	RR432
R49	RR434	R50	RR409
R52	RR409	R54	RR409
R55	RR409	R56	RR432
R57	---	R58	RR412
R59	RR409	R60	RR456
R61	RR456	R62	RR432
R63	RR409	R64	RR434
R65	RR432	R66	RR432

Resistor Location	E-mu Part Number	Resistor Location	E-mu Part Number
R67	RR432	R68	RR410
R69	RR410	R70	RR410
R71	RR456	R72	RR456
R73	RR456	R74	RR456
R75	RR409	R76	RR410
R77	RR456	R78	RR456
R79	RR432	R80	RR432
R81	RR432	R82	RR412
R83-R87	RR432	R88	RR432
R89	RR409	R90	RR456
R91	RR456	R92-R103	RR409
R104	RR422	R105	RR456
R106	RR422	R107	RR409
R108	RR422	R109	RR456
R110	RR422	R111	RR409
R112	RR422	R113	RR422
R114-R117	RR409	R118	RR409
R119	RR456	R120	RR456
R121	RR409	R122	RR409
R123	RR409	R124	RR456
R125	RR456	R126	RR456
R127	RR456	R128	RR432
R129	RR456	R130	RR412
R132	RR422	R134	RR450
R135	RR450	R136	RR432
R137	RR409	R138	RR432
R139	RR432	R140	RR432
R141	RR409	R142	RR409
R143	RR432	R144	RR432
R145	RR432	R146	RR432
R147	RR412	R148	RR412
R149	RR412	R150	RR432
R151	RR412	R152	RR412
R153	RR412	R154	RR412
R155	RR434	R156	RR409
R157	RR409	R158	RR422
R159	RR456	R160	RR409
R161	RR456	R162	RR456
R163	RR456	R164	RR456
R165	---	R166-R182	RR456

Resistor Location	E-mu Part Number	Resistor Location	E-mu Part Number
R183-R189	RR432	R190	RR432
R192	RR409	R193	RR409
R195	RR456	R196	RR456
R197	RR456	R198	RR409
R199	RR409	R200	RR456
R201	RR409	R202	RR456
R205	---	R206	RR456
R207-R213	RR434	R214	RR434
R215	RR412	R216	RR434
R217	RR434	R218	RR412
R219-R223	RR456	R224	RR456
R225-R231	RR411	R232	RR411

Integrated Circuits

Description	E-mu P/N	Quantity
CMOS 74HCT244	IC384	1
CMOS 74HCT245	IC385	2
CMOS 74HCT374	IC387	5
H-chip Digital Filter (1.5)	IC413	2
82078 Floppy Disk Controller	II382	1
85C80SCSI/SCC Controller	II383	1
Digital Audio Xmitter	II393	1
Digital Audio Receiver	II394	1
9x Active SCSI Terminator	IL357	2
93C46 64 X 16 EEPROM	IM400	1
68C020 25 MHz CPU	IM405	1
MFP 68901 PLCC-52	IM408	1
1M x 16 DRAM ≤70ns	IM432	2
1K x 9 FIFO ≤40nS	IM437	1
Programmed PLD - Sample1	IP751	1
Programmed PLD -6900 Chip Select	IP821	1
Programmed PLD - E4K/X/E4XT Mem Pal	IP822	1
Programmed PLD - ChipSel 6800/6900	IP872	1
Programmed Flash RAM, MSW, EOS Ver 2.0	IP980	1
Programmed Flash RAM, LSW, EOS Ver 2.0	IP981	1
74ACT138 3 to 8 Demux	IT426	3
K-Chip PLCC-68	IT433	1
74ACT074 Dual Flip-Flop	IT439	3
74HCT14 Hex Inverter	IT440	2

Description	E-mu P/N	Quantity
74ACT153 2 x 4 Multiplexer	IT442	2
74ACT125 Quad Buffer	IT443	1
74ACTQ16245 Xceiver	IT445	1
74ACTQ16374 Octal D Flip-Flop	IT446	1
74ACT299 Shift Register	IT447	1
74HCT293 Ripple Counter	IT452	1
74VHC157 2 x 4 Mux	IT461	2
74HC253 2 x 4 Input Multiplexer	IT466	1

Integrated Circuit Locations

IC Location	E-mu Part Number	IC Location	E-mu Part Number
U1	---	U2	IP751, JC357
U3	IC385	U4	IT443
U5	IC413	U6	IC413
U7	II394, JC308	U8	IT440
U9	IC387	U10	IC387
U11	IT447	U12	IC384
U13	IM437	U14	IT445
U15	IT426	U16	IT426
U17	IT426	U18	IP872, JC357
U19	IM408	U20	II383
U21	IL357	U22	IL357
U25	IT439	U26	IT439
U27	IT466	U28	IT442
U29	IT439	U30	IT442
U31	II393, JC333	U32	IT440
U33	IC387	U34	IT433
U35	IC387	U36	IM400
U37	IM405	U40	IT461
U41	IT461	U42	IM432
U43	IC387	U44	IM432
U45	II382	U46	---
U47	IT452	U48	IT446
U49	IP822, JC357	U50	IC385

Other Components

Description	E-mu P/N	Quantity
SMD914 Switching Diode	DD316	10
Zener Transient Suppressor Bi-Dir	DD324	1
SBR Diode 1.0A 40V	DD326	1
PC400 Iso-Optolator	OE303	1
2N3906 PNP Transistor	QQ308	3
3904 NPN Transistor	QQ309	4
2907A PNP Transistor SOT-223	QQ314	1
Polyswitch Fuse	ZF309	2
EMI Filter, L-C, Common Mode, 3-pin	ZI315	2
133Ω @ 100MHz Inductor	ZI316	2
65Ω @ 100MHz Inductor	ZI319	6
Inductor, 1.5 µH Choke	ZI322	1
Inductor, >1KΩ @ 100MHz	ZI323	4
DC-AC Inverter for LCD	ZV313	1
16MHz Xtal Oscillator	ZV314	1
24MHz Xtal Oscillator	ZV315	1
45.1584MHz Xtal Oscillator	ZV316	1
49.152 MHz Crystal Oscillator	ZX317	1

Other Component Locations

Component Location	E-mu Part Number
D1	DD316
D2	DD324
D3	DD316
D4	DD326
D5-D12	DD316
FS1-FS2	ZF309
L1-L2	ZI315
L3	ZI319
L4-L7	ZI323
L8-L9	ZI316
L10	ZI322
L11-L15	ZI319
Q1-Q2	QQ309
Q3	QQ308

Component Location	E-mu Part Number
Q4	QQ309
Q5	QQ308
Q7	QQ308
Q8	QQ309
Q9	QQ314
T1	ZT320
U1	OE303
U23	ZX317
U24	ZX316
U46	ZX314
VR1	ZV313
Y1	ZX315

Connectors

Description	E-mu P/N	Quantity
28-pin DIP Socket LP	JA308	1
24-pin, DIP Socket LP	JC333	1
SMD Socket, PLCC-44	JC357	3
5-position, Right Angle Triform	JI327	1
5-pin DIN Socket, Right Angle, Shielded	JI329	1
SCSI Connector, Shielded, Right Angle	JI332	1
Dual RCA Jack, Isolated Gnd, PCMT	JI334	1
.156 6-Pos. Header, Male, Locking	JP356	1
.100 x 4 Locking Power Header	JP380	1
2.5 mm 4-pos, k eyed, Power Header	JR397	1
50-pin Ribbon Cable Header	JR327	2
60-pin Ribbon Cable Header	JR328	2
2 x 10 Header .1 cntr	JR333	1
Header Shunt	JR334	3
1 x 2 Header	JR335	3
34-pin Dual Row Header	JR338	3
.100 x 6 Locking Header	JR356	1
3-Position Locking Header	JR360	1
1 x 3 Header	JR381	3
Female 16-pin Micro-match PCMT	JR388	1
Female 20-pin Micro-match PCMT	JR389	1
26-pin ZIF Socket	JR390	1

Connector Locations

Connector Location	E-mu Part Number
CN1	JI329
CN2	JI327
CN3	JI334
CN4	JR328
CN5	JI332
CN6	JR327
CN7	JR328
CN8	JR338
CN9	JR338
CN11	JP356
CN12	JR360
CN13	JR390
CN14	JR388
CN15	JR389
CN16	JR333
CN17	JR327
CN18	JR338
CN19	JP380
CN20	JR356
W3	JR335
W4-W6	JR334, JR381

Polyphony Board

Capacitors

Description	E-mu P/N	Qty
.01µF 50V Ceramic	CC417	15
10µF 16V Tantalum	CT326	2

Capacitor Locations

Capacitor Location	E-mu Part Number	Capacitor Location	E-mu Part Number
C1	CT326	C10-C16	CC417
C25-C28	CC417	C36	CT326
C37-C40	CC417		

Integrated Circuits

Description	E-mu P/N	Quantity
G2.0 Chip	IC402	1 or 2
74ACTQ16245	IT445	2

Integrated Circuit Locations

IC Location	E-mu Part Number	IC Location	E-mu Part Number
U2	IC402	U4, U6	IT445

Resistors

Description	E-mu P/N	Quantity
4.7 KΩ X 9 Resistor Network, 1/10W, 1%	RN346	1
47Ω, 1/10W, 1%	RR409	19
150Ω, 1/10W, 1%	RR410	1
1KΩ, 1/10W, 1%	RR412	2
4.7KΩ, 1/10W, 1%	RR432	6
10KΩ, 1/10W, 1%	RR434	3
30KΩ, 1/10W, 1%	RR437	1
10Ω, 1/10W, 1%	RR453	13

Resistor Locations

Res Location	E-mu Part Number	IC Location	E-mu Part Number
RN1	RN346	R1	RR432
R3, R4	RR434	R8	RR432
R9-R11	RR409	R12	RR410
R13	RR409	R14-R25	RR453
R26-R29	RR432	R30	RR437
R31	RR412	R33	RR412
R34-R46	RR409	R47	RR453
R49	RR409	R50	RR434

Connectors

Description	E-mu P/N	Quantity
72-pos SIMM Socket, .050 Au	JC348	4
or 72-pos SIMM Socket, Met. Latch .050 Au	*or* JC361	4
Header, 1 x 2, .1 center	JR335	1
Header, 2 x 4, .1 center	JR371	2
Socket, PC mount, 2 x 30, .1 center	JR399	1

G0.5 Effects Board

Capacitors

Description	E-mu P/N	Qty
.01µF 50V Ceramic	CC417	9
.1µF 50V Ceramic	CC419	8
10µF 16V Tantalum	CT326	2

Capacitor Locations

Capacitor Location	E-mu Part Number	Capacitor Location	E-mu Part Number
C1	CC417	C2	CT326
C3	CC419	C4	CC417
C5	CC419	C6	CC417
C7	CC417	C8	CC419
C10	CC419	C11	CC417
C12	CC417	C13	CC419
C14	CC419	C15	CT326
C16	CC417	C20	CC417
C21	CC419	C22	CC417

Integrated Circuits

Description	E-mu P/N	Quantity
EMU 8000 Chip	IC405	1
AV9170 PLL/Sync, SO8	II401	1
256 X 4 DRAM, ≤80nS, SOJ20	IM418	1
Programmed, G0.5 FX PAL, 6900	IP826	1
74HCT373 Octal Latch, SOL20	IT431	1
74ACT299 Shift Register, SOL20	IT447	1
74HCT299 Shift Register, SOL20	IT451	1

Integrated Circuit Locations

IC Location	E-mu Part Number	IC Location	E-mu Part Number
U1	---	U2	IT451
U3	IT451	U4	IM418
U5	IC405	U8	IP826, JC357
U9	IT431	U10	II401

Resistors

Description	E-mu P/N	Quantity
47Ω, 1/10W, 1%	RR409	9
10KΩ, 1/10W, 1%	RR434	1

Resistor Locations

Res Location	E-mu Part Number	IC Location	E-mu Part Number
R5-R8	RR409	R12-R14	RR409
R15	RR434	R16-R17	RR409

Connectors & Other

Description	E-mu P/N	Quantity
SMD Socket, PLCC-44	JC357	1
PCMT Socket, 2 X 17, .1 center	JR369	2
Inductor, ≥65Ω @ 100MHz	ZI319	1

Output PCB

Capacitors

Description	E-mu P/N	Qty
47µF 16V Aluminum Radial	CA326	1
470µF 25V Aluminum Radial	CA330	2
2200 pF 50V Ceramic	CC392	8
100 pF 50V Ceramic	CC413	2
470 pF 50V Ceramic	CC414	4
3900 pF 50V Ceramic	CC416	16
.01µF 50V Ceramic	CC417	2
.1 µF 50V Ceramic	CC419	39
22pF 50V Ceramic	CC421	2
1000 pF 50V Ceramic	CC423	3
4.7 pF 50V Ceramic	CC424	2
2.2µF 16V Tantalum	CT323	17
10µF 16V Tantalum	CT326	7

Capacitor Locations

Capacitor Location	E-mu Part Number	Capacitor Location	E-mu Part Number
C1	CT323	C2	CT323
C3	CT326	C4	CC419
C5	CT326	C6	CC419
C7	CC421	C8	CC419
C9	CC392	C10	CC419
C11	CT323	C12	CC419
C13	CC416	C14	CC416
C15	CC419	C16	CT323
C17	CC421	C18	CC419
C19	CC392	C20	CC419
C21	CC416	C22	CC416
C23	CA330	C24	CA326
C25	CC419	C26	CC416
C27	CC416	C28	CC392
C29	CC419	C30	CT323

Capacitor Location	E-mu Part Number	Capacitor Location	E-mu Part Number
C31	CT323	C32	CC419
C33	CC392	C34	CC416
C35	CC416	C36	CC419
C37	CC419	C38	CC416
C39	CC416	C40	CC392
C41	CC419	C42	CT323
C43	CT323	C44	CC419
C45	CC392	C46	CC416
C47	CC416	C48	CC419
C49	CC419	C50	CC416
C51	CC416	C52	CC392
C53	CC419	C54	CT323
C55	CT323	C56	CC419
C57	CC392	C58	CC416
C59	CC416	C60	CC419
C61	CC419	C62	CC413
C63	CC419	C64	CC424
C65	CT323	C66	CC419
C67	CC414	C68	CC414
C69	CT326	C70	CC419
C71	CC413	C72	CT326
C73	CC419	C74	CC419
C75	CC414	C76	CC414
C77	CC419	C78	CT323
C79	CC424	C80	CT323
C81	CC419	C82	CC419
C83	CT326	C84	CC423
C85	CT326	C86	CC419
C87	CC423	C88	CC423
C89	CT323	C90	CC419
C91	CT323	C92-C97	CC419
C98	CT323	C99	CC417
C100	CC417	C101	CT323
C102	CA330	C103	CT326
C104	CC419	C105	CC419
W2	CA342		

Resistors

Description	E-mu P/N	Quantity
2.67KΩ, 1/10W, 1%	RP391	18
10KΩ, 1/10W, 1%	RP392	20
100KΩ, 1/10W, 1%	RP393	2
1KΩ, 1/10W, 1%	RP402	8
3.24KΩ, 1/10W, 1%	RP406	9
4.99KΩ, 1/10W, 1%	RP409	6
9.09KΩ, 1/10W, 1%	RP410	2
45.3KΩ, 1/10W, 1%	RP411	2
1.5KΩ, 1/10W, 1%	RP413	25
2KΩ, 1/10W, 1%	RP414	25
11KΩ, 1/10W, 1%	RP416	2
47Ω, 1/10W, 5%	RR409	1
150Ω, 1/10W, 5%	RR410	13
270Ω, 1/10W, 5%	RR411	9
1KΩ, 1/10W, 5%	RR412	40
100KΩ, 1/10W, 5%	RR414	4
3.9KΩ, 1/10W, 5%	RR431	1
4.7KΩ, 1/10W, 5%	RR432	4
7.5KΩ, 1/10W, 5%	RR433	1
10KΩ, 1/10W, 5%	RR434	20
15KΩ, 1/10W, 5%	RR435	1
30KΩ, 1/10W, 5%	RR437	1
6.2KΩ, 1/10W, 5%	RR443	1
390Ω, 1/10W, 5%	RR450	2
22Ω, 1/2W, 10%	RW307	2

Resistor Locations

Resistor Location	E-mu Part Number	Resistor Location	E-mu Part Number
R1	RR412	R3	RR412
R5	RP392	R6	RR411
R7	RP392	R8	RP392
R9	RP392	R10	RW307
R11	RP392	R12	RR411
R13	RP414	R14	RR411
R15	RR412	R16	RP414
R17	RP413	R18	RW307
R19	RP413	R20	RP391

Resistor Location	E-mu Part Number	Resistor Location	E-mu Part Number
R21	RP413	R22	RR412
R23	RP391	R24	RR412
R25	RP392	R26	RP392
R27	RP414	R28	RR411
R29	RP392	R30	RR410
R31	RR412	R32	RP392
R33	RP392	R34	RP414
R35	RR410	R36	RR412
R37	RR412	R38	RR432
R39	RR410	R40	RR412
R41	RP413	R42	RP413
R43	RR410	R44	RP391
R45	RP413	R46	RR412
R47	RR411	R48	RP391
R49	RR432	R50	RR432
R51	RP391	R52	RR432
R53	RR410	R54	RP413
R55	RR412	R56	RP413
R57	RP413	R58	RP391
R59	RR412	R60	RR410
R61	RP413	R62	RR412
R63	RP413	R64	RR412
R65	RP391	R66	RP391
R67	RR434	R68	RP413
R69	RR434	R70	RR434
R71	RP391	R72	RR410
R73	RP413	R74	RR412
R75	RP413	R76	---
R77	RP413	R78	RP391
R79	RR434	R80	RR410
R81	RP413	R82	RR412
R83	RP413	R84	RR412
R85	RP391	R86	RP391
R87	RP413	R88	RR434
R89	RP391	R90	RR410
R91	RP413	R92	RR412
R93	RP413	R94	RR412
R95	RP413	R96	RP391
R97	RR434	R98	RR410
R99	RP413	R100	RR412

Resistor Location	E-mu Part Number	Resistor Location	E-mu Part Number
R101	RP413	R102	RP391
R103	RR412	R104	RP391
R105	RP413	R106	RP406
R107	RP392	R108	RP409
R109	RP392	R110	RP402
R111	RP409	R112	RP410
R113	RP406	R114	RP409
R115	RP392	R116	RP392
R117	RR409	R118	RP392
R119	RP393	R120	RR410
R121	RR434	R122	RP392
R123	RP406	R124	RP409
R125	RP410	R126	RP409
R127	RP406	R128	RP409
R129	RP392	R130	RP392
R131	RP416	R132	RP411
R133	RP406	R134	RR412
R135	RR414	R136	RR414
R137	RR412	R138	RP392
R139	RP402	R140	RP393
R141	RP416	R142	RP406
R143	RP402	R144	RP411
R145	RP402	R146	RP392
R147	RR434	R148	RR412
R149	RR412	R150	RR412
R151	RR434	R152	RR412
R153	RR412	R154	RR412
R155	RR434	R156	RR434
R157	RR434	R158	RR450
R159	RR450	R160	RR412
R161	RP392	R162	RP392
R163	RR412	R164	RR412
R165	RR410	R166	RR412
R167	RR412	R168	RR412
R169	RR412	R170	RR414
R171	RR414	R172-R178	RR434
R179	RR434	R180	RP413
R181	RR420	R182	RR443
R183	RR420	R184	RR437
R185	RR435	R186	RR433

Resistor Location	E-mu Part Number	Resistor Location	E-mu Part Number
R187	RR431	R188	RR411
R189	RR411	R190	RR411
R191	RR410	R192	RR411
R193	RP392	R194	RP391
R195	RP391	R196	RP392
R197	---	R198	RP406
R199	RR412	R200	RP406
R201	RP406		

Integrated Circuits

Description	E-mu P/N	Quantity
CMOS 74HCT244	IC384	1
CMOS 74HCT374	IC387	2
18-Bit Serial DAC	II379	8
16-bit Stereo, ∑Δ, Analog-Digital Converter	II381	1
10-bit , 8 channel, multiplexed ADC	II396	1
7905 -5V Regulator, 1A	IL112	1
7805 +5V Regulator, 1A	IL307	1
TL072 Dual BiFET OpAmp, SO8	IL354	11
5532 Dual BiFET, Lo-Noise OpAmp, SO8	IL361	2
74HC4052 Mux/Demux, SOL16	IT448	2

Integrated Circuit LocationsU1

IC Location	E-mu Part Number	IC Location	E-mu Part Number
U1	II379	U2	IL354
U3	IL354	U4	II379
U5	IL354	U6	II379
U7	IL354	U8	II379
U9	II379	U10	IL354
U11	II379	U12	II379
U13	IL354	U14	II379
U15	IL361	U16	IT448
U17	II381	U18	IL354
U19	IL361	U20	IT448
U21	IL354	U22	II396
U23	IL354	U24	IL354
U25	IC387	U26	IC384

IC Location	E-mu Part Number	IC Location	E-mu Part Number
U27	IC387	U28	IL354
VR1	IL112	VR2	IL307

Other Components

Description	E-mu P/N	Quantity
SMD914 Switching Diode	DD316	13
Zener Transient Suppressor Bi-Dir	DD324	4
10V Zener Diode SOT-23	DD329	2
4-40 Kepf Nut	HN304	2
4-40 x 3/8" Phillips Screw	HS302	2
2N3906 PNP Transistor	QQ308	4
3904 NPN Transistor	QQ309	14
2907A PNP Transistor SOT-223	QQ314	1
2222A NPN Transistor, switching, SOT-223	QQ315	1
Heatsink, Black Anodized, TO-220	ZE324	2
65Ω @ 100MHz Inductor	ZI319	4

Other Component Locations

Component Location	E-mu Part Number
D1-D2	DD329
D3-D6	DD316
D7-D8	DD324
D9-D17	DD316
D18-D19	DD324
L1-L4	ZI319
Q1	QQ315
Q2	QQ314
Q3-Q4	QQ309
Q5	QQ308
Q6-Q9	QQ309
Q10	QQ308
Q11-Q12	QQ309
Q13	QQ308
Q14-Q19	QQ309

Component Location	E-mu Part Number
Q22	QQ308
VR1, VR2	HN304, HS302, ZE324

Connectors

Description	E-mu P/N	Quantity
1/4” Audio Jack, Tip=clsd, Ring=Opn, PCMT	JA309	14
14-pin, 2-row Header, .1 center	JC340	1
.100 x 4 Locking Power Header	JP380	1
60-pin Ribbon Cable Header	JR328	1
Header Shunt	JR334	2
1 x 2 Header	JR335	2
.100 x 6 Locking Header	JR356	1

Connector Locations

Connector Location	E-mu Part Number
CN1	JP380
CN2	JC340
CN3	JR356
CN4	JR328
J1-J14	JA309
W1	JR334, JR335

E4K Left Front Panel

Connectors

Description	E-mu P/N	Quantity
Audio Jack 1/4” stereo, right angle, PCMT	JA317	1
Header, 2 x 10 .1 center	JR333	1
Header , 2 x 10, .1 center	JR377	1
Header, 2 x 7, .1 center	JR392	1
Header, 2 x 10, Rt. Angle, .1 center	JR393	1
3-Pos Locking Header, right angle	JR372	1

Other Components

Description	E-mu P/N	Quantity
Ellipse Key printed “0”	AM105-00	1
Ellipse Key printed “1”	AM105-01	1
Ellipse Key printed “2”	AM105-02	1
Ellipse Key printed “3”	AM105-03	1
Ellipse Key printed “4”	AM105-04	1
Ellipse Key printed “5”	AM105-05	1
Ellipse Key printed “6”	AM105-06	1
Ellipse Key printed “7”	AM105-07	1
Ellipse Key printed “8”	AM105-08	1
Ellipse Key printed “9”	AM105-09	1
Ellipse Key printed “INC”	AM107-00	1
Ellipse Key printed “DEC”	AM107-01	1
Ellipse Key printed “+/-”	AM107-02	1
Ellipse Key printed “.”	AM107-03	1
Sequencer Key printed “RTZ”	AM113-01	1
Sequencer Key printed “REW”	AM113-02	1
Sequencer Key printed “FF”	AM113-03	1
Sequencer Key printed “RSTOP”	AM113-04	1
Sequencer Key printed “PLAY”	AM113-05	1
Sequencer Key printed “REC”	AM113-06	1
Red LED	LP302	7
Green LED	LP308	3
240 X 64 LCD	LP326	1
10KΩ Slide Potentiometer, 45mm	RC330	5
150Ω, 1/10W, 1%	RR102	8

Description	E-mu P/N	Quantity
Momentary SPST Switch Without Cap	SW340	11
Momentary SPST Switch w/o Cap, (Seq.)	SW343	6
Inductor, 750Ω 2 100MHz	ZI306	3

E4K Right Front Panel

Connectors

Description	E-mu P/N	Quantity
Header, 2 x 17, .1 center	JR391	1
Header, 2 x 10, .1 center	JR393	1

Other Components

Description	E-mu P/N	Quantity
Red LED	LP302	2
150Ω, 1/10W, 1%	RR102	18
Momentary SPST Switch Without Cap	SW340	28
Encoder 16mm, 24 detent, vert	SW345	1
Inductor, 750Ω 2 100MHz	ZI306	2

Thumby PCBA

Components

Description	E-mu P/N	Quantity
Keyboard Base Chassis	EM505	1
Rear Channel Extrusion	EM508-03	1
Pitch/Mod Wheel Bracket	EM512	2
Right Endcap Plate	EM513-01	2
Power Supply Cover	EM514	1
Floppy Drive Mounting Bracket	EM517	1
Option Port Cover	EM522-01	1
Retainer for Pitch/Mod Wheel Bracket	EM516	1
Plastic Endcap, Left	EP492-01	1
Plastic Endcap, Right	EP493-01	1
Wheel Housing	EP494-01	1
Pitch/Mod Wheel	EP495	2
Thumby Switch Cap	EP496	1
270° Torsion Spring	HB304	1
Ribbon Cable Clamp	HC312	3
6-32 Kepf Nut	HN121	1
3/8-32 Nut	HN135	14

Description	E-mu P/N	Quantity
4-40 x 1/4 Screw	HS352	2
6-32 x 1/4 Panel Screws	HS353	23
6-32 x 1/4 Phillip Screw, Black	HS368	2
6-19 x 1/2 Plastic Phillip Screw	HS429	16
4-20 x 3/8 Screw	HS431	8
7/16” Clip-Latch Standoff, Nylon	HS448	6
M2 x 4mm Screw (DIN)	HS461	4
8-32 x 7/8” Phillip Black Screw	HS462	4
8-32 x 3/8” Phillip Black Screw	HS465	2
#4 x 3/8” Plastite Screw	HS466	14
4-40 x 1/4 Phillip, SEM, Black	HS467	4
6-32 x 1/4 Phillip, SEM, Black	HS468	2
3/8” LocktoothWasher	HW312	1
3/8” Washer .093, Thick Panel, Nickel	HW322	14
Washer, #6 x .267OD x .032 Thick	HW342	2
3/8” Ring Retaining Washer	HW333	1
Fiber Washer for JA316	HW440	1
Sustain Foot Switch	SW332	1
RFI Suppression Core for Ribbon Cable	ZI321	1
76-Note KYBD with Pressure	ZK335	1
3.5” Floppy Drive	ZM365	1
EMI Shield for Bottom Panel	ZP339	1
EMI Shield for Top Panel	ZP340	1
Vinyl Foot	ZR346	6
2mm x 6mm EMI Gasket	ZR350	1
Switching Power Supply	ZV315	1

Final Assembly

Cables

Description	E-mu P/N	Quantity
AC Power Cable	AC413	1
SCSI Interface Cable	AC368	1
Floppy Data Cable	AC378	1
Syquest Power Cable	AC386	1
DC Harness	AC393	1
Pitch/Mod Wheel Cable	AC394	1
Keybaord Interface Cable, 16 -pin	AC395	1
Keybaord Interface Cable, 20 -pin	AC396	1
Front Panel Interface Cable	AC397	1
AC Cable	AC398	1
Keyboard Pressure Cable	AC399	1
3” Ribbon Cable, IDC	AC401	1
7” Ribbon Cable, IDC	AC402	1
7.5” Ribbon Cable, IDC	AC405	1
Power Cord (USA)	WC307	1 or
Power Cord (Western Europe)	WC308	1 or
Power Cord (UK)	WC327	1
MIDI Cable, 10 ft.	WC309	1

Miscellaneous

Description	E-mu P/N	Quantity
Lens Assembly w/Bezel	AM123	1
Adhesive Tape, .025” thick x 1/4”	BS418	3.87”
1N914 Small Signal Diode	DD301	8
Enclosure, Channel KYBD Strip w/silkscreen	EM510-03	1
Keyboard Control Panel, 6900	EM511	1
Arrow Button	EP417	4
Button Cap, Black	EP418	23
Encoder Knob	EP497	1
Slider Cap	EP500	5
Slider Bezel, 45mm	EP501	5
Encoder Knob Bezel	EP502	1
Cable Stickdown	HC121	1
Cable Tie-wrap	HC302	13

Description	E-mu P/N	Quantity
Nut, 9mm, ID 11mm, A/F, .75TP	HN331	1
4-40 x 1/4 Phillips Screw	HS352	4
6-32 x 1/4 Phillips Screw	HS353	16
Washer, .275ID x .500 x .062, Nylon	HW442	1
Red Felt Strip, 1/4”W x 43”L, w/adhesive	ZR349	1
Foot With Push Rivet	ZR346	4
Power Supply Insulator	ZR353-01	1
15W 100-250VAC Power Supply	ZV315	1

E4XT, E-Synth Rack, e6400 Parts List

Ordering EOS Parts

Parts can be ordered by written order or by phone. When ordering parts, you must order by E-MU part number. The minimum charge for parts orders is $15.00. Emergency rush orders can usually be sent out the same day if the order is received by 11:00am PST. Parts orders can be placed between the hours of 8:30am and 5:30pm PST, Monday through Friday.

E-MU Customer Service Department: (831) 438-1921

Main PCB

Capacitors

Description	E-mu P/N	Qty
47µF 16V Aluminum Radial	CA326	1
470µF 25V Aluminum Radial	CA330	1
100µF 25V Aluminum Radial	CA342	2
2200 pF 50V Ceramic	CC392	8
100 pF 50V Ceramic	CC413	2
470 pF 50V Ceramic	CC414	4
3900pF 50V Ceramic	CC416	16
.01µF 50V Ceramic	CC417	57
.1 µF 50V Ceramic	CC419	73
22pF 50V Ceramic	CC421	4
1000pF 50V Ceramic	CC423	3
4.7 µF 50V	CC424	2
4700 pF 50V	CC425	1
2.2µF 16V Tantalum	CT323	20
10µF 16V Tantalum	CT326	8

Capacitor Locations

Capacitor Location	E-mu Part Number	Capacitor Location	E-mu Part Number
C1	CT323	C2	CC423
C3	CC423	C4	CC392
C5	CC419	C6	CC416
C7	CC419	C8	CC416
C9,C10	CT323	C11	CC392
C12	CC419	C13	CC416
C14	CC419	C15	CC416
C16, C17	CC419	C18	CC392
C19	CC419	C20	CC416
C21	CC419	C22	CC416
C23	CT323	C24	CT323
C25	CC392	C26	CC419
C27	CC416	C28	CC419
C29	CC419	C30	CC419

Capacitor Location	E-mu Part Number	Capacitor Location	E-mu Part Number
C31	CC419	C32	CC392
C33	CC419	C34	CC416
C35	CC419	C36	CC416
C37	CT323	C38	CT323
C39	CC392	C40	CC419
C41	CC416	C42	CC419
C43	CC416	C44	CC419
C45	CC419	C46	CC392
C47	CC419	C48	CC416
C49	CC419	C50	CC416
C51	CT323	C52	CT323
C53	CC392	C54	CC419
C55	CC416	C56	CC419
C57	CC416	C58	CC419
C59	CC419	C60	CC413
C61	CC419	C62	CC413
C63	CC419	C64	CC424
C65	CT323	C66	CC419
C67	CC424	C68	CT323
C69	CT323	C70	CC417
C71	CC419	C72	CC414
C73	CC414	C74	CT326
C75	CC419	C76	CC419
C77	CT326	C78	CC417
C79	CC414	C80	CC414
C81	CT323	C82	CC419
C83	CC419	C84	CC419
C85	CC417	C86	CT323
C87	CT323	C88	CC419
C89	CC421	C90	CC419
C91	CC421	C92	CA330
C93	CT323	C94	CT326
C95	CT323	C96	CT323
C97	CT326	C98	CT323
C109	-- ---	C110	CC417
C111	CC419	C112	CC419
C113	CC419	C114	CC419

Capacitor Location	E-mu Part Number	Capacitor Location	E-mu Part Number
C115	CC419	C116	CC417
C117	CC417	C118	CC417
C119	CC417	C120	CC417
C121	CC417	C122	CC423
C123	CT326	C124	CC419
C125	CA326	C126	CC417
C127	CC417	C128	CC417
C129	CC419	C130	CC417
C131	CC419	C132	CC417
C133	CC419	C134	CC417
C135	CC417	C136	CC417
C137	CC419	C138	CT326
C139	CC419	C140	CC417
C141	CC417	C142	CC417
C143	CC417	C144	CC417
C145	CC417	C146	CC417
C147	CC417	C148	CC417
C149	CC417	C150	CC419
C151	CC419	C152	---
C153	CC419	C154	CT326
C155	CC419	C156	CC419
C157	CC417	C158	CC419
C159	CC417	C160	CC419
C161	CT323	C162	CC419
C163	CC419	C164	CC417
C165	CA330	C166	CC417
C167	CC417	C168	CC419
C169	CC419	C170	CC417
C171	CC419	C172	CC419
C173	CC419	C174	CC419
C175	CC417	C176	CC417
C177	CC419	C178	CC419
C179	CC419	C180	CC417
C181	CC419	C182	CC417
C183	CC417	C184	CC419
C185	CC417	C186	CC419
C187	CC419	C188	CC417

Capacitor Location	E-mu Part Number	Capacitor Location	E-mu Part Number
C189	CC417	C190	CC417
C191	CC425	C192	CC417
C193	-- ---	C194	CC417
C195	CC419	C196	CC419
C197	CC417	C198	C4326
C199	CC417	C200	CC417
C201	CC417	C202	CC417
C203	CC417	C204	CC419
C205	CC417	C206	CC417
C207	CC417	C208	CC417
C209	CC419	C210	CC419
C211	CC421	C212	CC421

Resistors

Description	E-mu P/N	Quantity
2.67KΩ, 1/10W, 1%	RP391	16
10KΩ, 1/10W, 1%	RP392	8
100KΩ, 1/10W, 1%	RP393	2
1KΩ, 1/10W, 1%	RP402	8
3.24KΩ, 1/10W, 1%	RP406	6
4.99KΩ, 1/10W, 1%	RP409	8
9.09KΩ, 1/10W, 1%	RP410	2
45.3KΩ, 1/10W, 1%	RP411	3
1.5KΩ, 1/10W, 1%	RP413	41
47Ω, 1/10W, 5%	RR409	63
150Ω, 1/10W, 5%	RR410	25
270Ω, 1/10W, 5%	RR411	18
1KΩ, 1/10W, 5%	RR412	55
0.0Ω, 1/10W, 5%	RR420	5
100Ω, 1/10W, 5%	RR422	7
4.7KΩ, 1/10W, 5%	RR432	57
10KΩ, 1/10W, 5%	RR434	33
75KΩ, 1/10W, 5%	RR456	50
22Ω, 1/2W, 10%	RW307	2

Resistor Locations

Resistor Location	E-mu Part Number	Resistor Location	E-mu Part Number
R1 - R16	RR412	R17	RP402
R18	RR420	R19	RR410
R20	RR410	R21	RR420
R22	RR410	R23	RR410
R25	RR410	R27	RR411
R28	RR412	R29	RR410
R30	RR412	R31	RP413
R32	RP413	R33	RP391
R34	RP391	R35	RR410
R36	RR412	R37	RP413
R38	RP413	R39	RP413
R40	RR410	R41	RR412
R42	RP413	R43	RP413
R44	RP391	R45	RP391

Resistor Location	E-mu Part Number	Resistor Location	E-mu Part Number
R46	RR410	R47	RR412
R48	RP413	R49	RP413
R50	RP413	R51	RR410
R52	RR412	R53	RP413
R54	RP413	R55	RP391
R56	RP391	R57	RR410
R58	RR412	R59	RP413
R60	RP413	R61	RP413
R62	RR410	R63	RR412
R64	RP413	R65	RP413
R66	RP391	R67	RP391
R68	RR410	R69	RR412
R70	RP413	R71	RP413
R72	RP413	R73	RR410
R74	RR412	R75	RP413
R76	RP413	R77	RP391
R78	RP391	R79	RR410
R80	RR412	R81	RP413
R82	RP413	R83	RP413
R84	RR410	R85	RR412
R86	RP413	R87	RP413
R88	RP391	R89	RP391
R90	RR410	R91	RR412
R92	RP413	R93	RP413
R94	RP413	R95	RR410
R96	RR412	R97	RP413
R98	RP413	R99	RP391
R100	RP391	R101	RR410
R102	RR412	R103	RP413
R104	RP413	R105	RP413
R106	RR410	R107	RR412
R108	RP413	R109	RP413
R110	RP391	R111	RP391
R112	RR410	R113	RR412
R114	RP413	R115	RP413
R116	RP413	R117	RP392
R118	RP406	R119	RP410
R120	RP402	R121	RP406
R122	RP392	R123	RP409
R124	RP409	R125	RP409

Resistor Location	E-mu Part Number	Resistor Location	E-mu Part Number
R126	RP406	R127	RP402
R128	RP406	R129	RP410
R130	RP392	R131	RP392
R132	RP409	R133	RP402
R134	RP416	R135	RP411
R136	RP406	R137	RP409
R138	RP393	R139	RP402
R140	RP416	R141	RP406
R142	RP402	R143	RP411
R144	RP409	R145	RP393
R146	RP402	R147	RR409
R148	RR434	R149	RR410
R150	RP402	R151	RR410
R152	RR410	R155	RR432
R156	RR432	R157	RR432
R158	RR432	R159	RR432
R160	RR432	R161	RR432
R162	RR412	R163	RR432
R164	RR432	R165	RR412
R166	RP392	R167	RP392
R168	RR411	R169	RW307
R170	RR411	R171	RR411
R172	RR411	R173	RW307
R174	RP392	R175	RR432
R176	RP392	R177	RR412
R179	RR412	R181-R195	RR409
R196	RR434	R197	RR409
R198-R203	RR412	R204	RR409
R205	RR432	R206	RR412
R207	RR434	R208	RR434
R209	RR434	R210	RR434
R211	RR434	R213	RR434
R215	RR434	R216-R222	RR434
R223	RR456	R224-R228	RR456
R229	RR434	R230-R234	RR456
R235	RR432	R236	RR422
R237	RR432	R238	RR411
R239	RR432	R240	RR409
R241	RR409	R242	RR422
R243	RR420	R244	RR409

Resistor Location	E-mu Part Number	Resistor Location	E-mu Part Number
R245	---	R246	RR409
R247	RR409	R248	RR409
R251	RR432	R252	RR409
R253	RR409	R254	RR456
R255	RR432	R256-R264	RR456
R265	RR456	R266	RR432
R267	RR456	R268	RR409
R269	RR456	R270	RR432
R271	RR432	R272	RR412
R273	RR432	R274	RR456
R275	RR432	R276	RR410
R277	RR432	R278	RR422
R279	RR456	R280	RR422
R281	RR432	R282	RR409
R283	RR434	R284	RR432
R285	RR409	R286	RR409
R287	RR409	R288	RR409
R289	RR409	R290	RR409
R291	RR409	R292	RR432
R293	RR432	R294	RR432
R295	RR422	R296	RR456
R297	RR422	R298	RR456
R299	RR432	R300	RR409
R301	RR409	R302	RR409
R303	---	R304	RR420
R305	RR432	R306	RR432
R311	RR456	R312	RR434
R313	RR412	R314	RR456
R317	RR422	R318	RR456
R319	RR409	R320	RR456
R321	RR432	R322	RR456
R323	RR456	R324	RR409
R325	RR432	R326	RR409
R327	RR432	R328	RR434
R329	RR432	R330	RR409
R331	RR432	R332	RR432
R333	RR432	R334	RR432
R335	RR432	R337	RR432
R338	RR409	R339	RR409
R340	RR412	R343-R346	RR456

Resistor Location	E-mu Part Number	Resistor Location	E-mu Part Number
R347	RR456	R348	RR409
R350	RR409	R351	RR456
R357	RR456	R358	RR409
R359	RR409	R360	RR409
R361	RR409	R362	RR409
R363	RR409	R364	RR409
R365	RR409	R366	RR434
R367	RR412	R368	RR409
R369	RR432	R370	RR456
R371	RR432	R372	RR456
R373	RR456	R374	RR432
R375	RR409	R376	RR432
R377	RR432	R378	RR432
R379	RR432	R380	RR432
R381	RR412	R382	RR420
R383	RP413	R384	RP409
R385	RP409	R386	RR434
R387	RR434	R388	RP411
R389-R399	R411	R400	R411
R401	RR456	R402	RR456
R403	RR432	R404	RR432
R405	RR456	R406	RR432
R407	RR456	R408	RR432
R409	RR456	R410	RR432
R411	RR432	R412	RR456
R413	RR432	R414	RR432
R415	RR434	R416	RR412
R417	RR412	R418-R426	RR434
R427	RR409	R428	RR409
R429	RR409	R430	RR432
R431	RR409	R432	RR409
R433-R435	RR412	R436	RR412

Integrated Circuits

Description	E-mu P/N	Quantity
CMOS 74HCT244	IC384	2
CMOS 74HCT245	IC385	1
CMOS 74HCT374	IC387	7
G-chip Sound Engine (2.0)	IC402	1 (or 2)
EMU8000 Chip	IC405	1
H-chip Digital Filter (1.5)	IC413	2
AD1860 18-bit Serial DAC	II379	8
16-bit ∑Δ ADC	II381	1
82078 Floppy Disk Controller	II382	1
85C80SCSI/SCC Controller	II383	1
Digital Audio Xmitter	II393	1
Digital Audio Receiver	II394	1
AV 9170 PLL/Sync	II401	1
7905 -5V 1A Voltage Regulator	IL112	1
7805 +5V 1A Voltage Regulator	IL307	1
TL072 Dual Op-Amp	IL354	9
9x Active SCSI Terminator	IL357	2
FET Dual Audio Amp	IL361	2
93C46 64 X 16 EEPROM	IM400	1
68C020 25 MHz CPU	IM405	1
1K x 9 FIFO ≥40 ns	IM413	1
256K x 4 80NS DRAM	IM418	1
1M x 16 DRAM ≤70ns	IM432	2
Programmed PLD - Sample	IP751	1
Programmed PLD - MemPAL	IP822	1
Programmed PLD - G0.5 FX PAL	IP826	1
Programmed PLD - ChipSel 6800/6900	IP872	1
74ACT138 3 to 8 Demux	IT426	3
K-Chip PLCC-68	IT433	1
74ACT074 Dual Flip-Flop	IT439	3
74HCT14 Hex Inverter	IT440	2
74ACT153 2 x 4 Multiplexer	IT442	2
74ACTQ16245 Xceiver	IT445	1
74ACTQ16374 Octal D Flip-Flop	IT446	1
74ACT299 Shift Register	IT447	2
74HC4052 Mux/Demux	IT448	2
74HCT299 Shift Register	IT451	2
74HCT293 Ripple Counter	IT452	1
74VHC157 2 x 4 Mux	IT461	2
74HC253 2 x 4 Input Multiplexer	IT466	1

Integrated Circuit Locations

IC Location	E-mu Part Number	IC Location	E-mu Part Number
VR1	IL307	VR2	IL112
U1	OE303	U2	IL357
U3	II379	U4	IL354
U5	II379	U6	IL354
U7	II379	U8	IL354
U9	II379	U10	IL354
U11	II379	U12	IL354
U13	II379	U14	IL354
U15	II379	U16	IL354
U17	II379	U18	IL354
U19	IT448	U20	IL361
U21	IT448	U22	IL361
U23	II381	U24	IC384
U25	II383	U26	IL357
U27	IL354	U28	IC413
U29	IC413	U30	IC387
U31	IC384	U32	IT439
U33	IP751	U34	IT447
U36	IM413	U38	IT439
U39	II401	U40	IC405
U41	IM418	U42	II394
U43	II393	U44	IM408
U45	IP872	U46	IT466
U47	IT442	U49	IT442
U50	IT439	U52	IT426
U53	IM400	U54	IT440
U55	IT440	U57	IT452
U58	IM432	U59	IM432
U60	IT451	U61	IT451
U62	IT426	U63	IT426
U65	IC387	U66	IC387
U67	IC387	U68	IC387
U69	IT445	U70	IT461
U71	IT461	U72	IT447
U73	IP826	U74	IC387
U75	IC387	U76	IT433
U77	IT446	U78	IM405
U79	IC385	U80	IP822
U81	IT382		

Other Components

Description	E-mu P/N	Quantity
SMD914 Switching Diode	DD316	18
Zener Transient Suppressor Bi-Dir	DD324	5
SBR Diode 1.0A 40V	DD326	1
10V Zener Diode SOT-23	DD329	2
PC400 Iso-Optolator	OE303	1
2N3906 PNP Transistor	QQ308	6
3904 NPN Transistor	QQ309	20
2907A PNP Transistor SOT-223	QQ314	1
2222A NPN Transistor SOT-223	QQ315	2
Black Anodized Heatsink, TO-220	ZE324	1
Polyswitch Fuse	ZF309	1
133Ω @ 100MHz Inductor	ZI316	4
65Ω @ 100MHz Inductor	ZI319	6
DC-AC Inverter for LCD	ZV316	1
16 MHz Crystal Oscillator	ZX314	1
24 MHz Crystal Oscillator	ZX315	1
45.1584 MHz Crystal Oscillator	ZX316	1
49.152 MHz Crystal Oscillator	ZX317	1

Other Component Locations

Component Location	E-mu Part Number
D1-D3	DD316
D4	DD324
D5	DD326
D6-D9	DD324
D10-D13	DD316
D14, D15	DD329
D16-D18	DD316
D20-D27	DD316
FS1	ZF309
L3, L4	ZI316
L5, L6	ZI319
L8, L9	ZI316
L11-L14	ZI319
Q1, Q2	QQ308
Q3-Q19	QQ309

Component Location	E-mu Part Number
Q20	QQ308
Q21-Q23	QQ309
Q24	QQ308
Q25	QQ315
Q26	QQ314
Q27	QQ308
Q28	QQ315
U1	OE303
U37	ZX316
U48	ZX317
U56	ZX314
V1	ZX315
VR1	ZE324
VR4	ZV316

Connectors

Description	E-mu P/N	Quantity
1/4" Phone Jack, Closed Ring	JA309	10
14-pin, 2 Row Header	JC340	1
Prom Socket	JC357	4
72-pin SIMM Socket	JC361	1
5-position, Right Angle Triform	JI327	1
SCSI Connector, Shielded, Right Angle	JI332	1
.156 6-Pos. Header, Male, Locking	JP356	1
.100 x 4 Locking Power Header	JP380	4
2.5 mm 4-pos, k eyed, Power Header	JR397	1
50-pin Ribbon Cable Header	JR327	2
60-pin Ribbon Cable Header	JR328	1
2 x 10 Header .1 cntr	JR333	1
Header Shunt	JR334	5
1 x 2 Header	JR335	3
34-pin Dual Row Header	JR338	4
.100 x 6 Locking Header	JR356	1
3-Position Locking Header	JR360	2
1 x 3 Header	JR381	2

Connector Locations

Connector Location	E-mu Part Number
CN1	JI327
CN2	JI332
CN3	JR360
CN4	JR327
CN5	JP380
CN6	JP356
CN7	JP380
CN8	JR328
CN9	JR327
CN10	JP380
CN11	JP380
CN12	JR338
CN13	JR356
CN14	JC361
CN15	JR338
CN16	JR338
CN17	JP397

Connector Location	E-mu Part Number
CN18	JR360
CN19	JR338
CN20	JR333
J1-J10	JA309
J11	JC340
U33, U45, U73, U80	JC357
W1, W2	JR381
W5-W7	JR335

Polyphony Board

Capacitors

Description	E-mu P/N	Qty
.01µF 50V Ceramic	CC417	15
10µF 16V Tantalum	CT326	2

Capacitor Locations

Capacitor Location	E-mu Part Number	Capacitor Location	E-mu Part Number
C1	CT326	C10-C16	CC417
C25-C28	CC417	C36	CT326
C37-C40	CC417		

Integrated Circuits

Description	E-mu P/N	Quantity
G2.0 Chip	IC402	1 or 2
74ACTQ16245	IT445	2

Integrated Circuit Locations

IC Location	E-mu Part Number	IC Location	E-mu Part Number
U2	IC402	U4, U6	IT445

Resistors

Description	E-mu P/N	Quantity
4.7 KΩ X 9 Resistor Network, 1/10W, 1%	RN346	1
47Ω, 1/10W, 1%	RR409	19
150Ω, 1/10W, 1%	RR410	1
1KΩ, 1/10W, 1%	RR412	2
4.7KΩ, 1/10W, 1%	RR432	6
10KΩ, 1/10W, 1%	RR434	3
30KΩ, 1/10W, 1%	RR437	1
10Ω, 1/10W, 1%	RR453	13

Resistor Locations

Res Location	E-mu Part Number	IC Location	E-mu Part Number
RN1	RN346	R1	RR432
R3, R4	RR434	R8	RR432
R9-R11	RR409	R12	RR410
R13	RR409	R14-R25	RR453
R26-R29	RR432	R30	RR437
R31	RR412	R33	RR412
R34-R46	RR409	R47	RR453
R49	RR409	R50	RR434

Connectors

Description	E-mu P/N	Quantity
72-pos SIMM Socket, .050 Au	JC348	4
or 72-pos SIMM Socket, Met. Latch .050 Au	*or* JC361	4
Header, 1 x 2, .1 center	JR335	1
Header, 2 x 4, .1 center	JR371	2
Socket, PC mount, 2 x 30, .1 center	JR399	1

Front Panel PCBA

Connectors

Description	E-mu P/N	Quantity
Audio Jack 1/4” stereo, right angle, PCMT	JA317	1
3-Pos Locking Header, right angle	JR372	1

Other Components

Description	E-mu P/N	Quantity
Ellipse Key printed “0”	AM105-00	1
Ellipse Key printed “1”	AM105-01	1
Ellipse Key printed “2”	AM105-02	1
Ellipse Key printed “3”	AM105-03	1
Ellipse Key printed “4”	AM105-04	1
Ellipse Key printed “5”	AM105-05	1
Ellipse Key printed “6”	AM105-06	1
Ellipse Key printed “7”	AM105-07	1
Ellipse Key printed “8”	AM105-08	1
Ellipse Key printed “9”	AM105-09	1
Ellipse Key printed “INC”	AM107-00	1
Ellipse Key printed “DEC”	AM107-01	1
Ellipse Key printed “+/-”	AM107-02	1
Ellipse Key printed “.”	AM107-03	1
Lens Assembly E--6400 Rack	AM123	1
Lens Assembly E-Synth Rack	AM128	1
240 X 64 LCD Assembly w/Header	AP441	1
Mounting Bracket - RC325	EM359	1
3U high Insert Panel	EM485	1
Encoder Panel Knob	EM504	1
Front Panel Mounting Plate	EM531	1
3U Front bezel with standoffs	EP416-03	1
Arrow Button Cap	EP417	4
Ellipse Button Cap	EP418	20
Ball Bearing for Encoder	HG001	1
Spline Knob, 6mm , Grey on Black	HK341	1
4-40 Kepf Nut	HN304	7
4-40 x 1/4 Phillips Screw	HS352	4
6-32 x 1/4 Self -tap, Phillips Screw	HS393	1

Description	E-mu P/N	Quantity
4-20 x 3/8 Phillips Screw, plastic	HS431	9
Nut, 7mm, 9/10mm A/F	HN313	1
Washer, .287 x .475 x .020	HW443	1
Red LED	LP302	8
Green LED	LP308	2
50KΩ Res Pot	RC327	1
10KΩ, 1/10W, 1%	RR309	2
Rotary Encoder, 36 Det, 90 VC/rev, D-shaft	SW335	1
Momentary SPST Switch Without Cap	SW340	38
RFI Suppression Core for Ribbon Cable	ZI321	1
E-MU Logo Label	ZL463	1
E-Synth Rack Overlay Panel	ZL493	1
E4XT Rack Overlay Panel	ZL504-01	1
E4/E6400 Rack Overlay Panel	ZL5050-01	1
Rubber Wheel Cushion	ZR323	1

Final Assembly

Cables

Description	E-mu P/N	Quantity
Headphone Cable	AC355	1
Internal SCSI Cable	AC368	1
LCD Ribbon Cable (1 x 14)	AC371	1
Main PCB Power Supply Cable	AC372	1
Floppy Drive Power Cable	AC373	1
Floppy Drive Data Cable (2 x 17)	AC378	1
AC-Power Supply Cable Assy.	AC379	1
12VDC Fan Cable	AC381	1
DC Harness	AC393	1
Internal SCSI Cable	AC412	1
Volume Pot Cable	AC387	1
AC Power Cable	AC413	1
16” Headphone Cable	AC418	1
SCSI Cable (Int./Ext.)	AC419	1
DC Power Cable	AC420	1
Power Cable	WC308	1
MIDI Cable, 10 ft.	WC309	1

Miscellaneous

Description	E-mu P/N	Quantity
Rack Ears	EM477-03	1
Chassis Top	EM478	1
Option Port Cover Plate	EM482	3
Chassis Base, 3U high	EM530	1
Power Supply Cover	EM532	1
Power Button Extension	EP419	1
Encoder KNob	EP421	1
Power Button	EP422-01	1
6-32 Kepf Nut	HN121	3
3/8-32 Panel Nut, nickel	HN135	10
4-40 x 1/4 Phillips Screw	HS352	10
6-32 x 1/4 Phillips Screw	HS353	11
#4 x 1-1/4 Phillips Screw	HS381	2

Description	E-mu P/N	Quantity
6-32 x 1/4 Phillips Screw, x-sm, (Black)	HS386	7
6-32 x 1/4 Phillips Screw, self tap	HS393	4
4-20 x 3/8 Phillips Screw, plastic	HS431	2
7/16” Nylon clip-latch Standoff	HS448	6
#2 x 1/4 PHTCS Phllips Screw	HS450	1
8-32 x 3/8 Phillip Screws for Rack Ears	HS454	4
M3 x 6mm Screw PHMS XSEM set	HS463	4
4-40 x 3/16 P/PH Taptite Screw	HS476	4
Finger Guard for 40mm Fan	ZE334	1
Foot With Push Rivet	ZR346	4
Power Supply Insulator	ZR353-01	1
15W 100-250VAC Power Supply	ZV315	1

AES/ASCII Board

Connectors

Description	E-mu P/N	Quantity
Male XLR PC mount	JA322	1
Female XLR PC mount	JA323	1
Header, 14-pin , 2-row, .1 center	JC340	1
DIN connector 5-pos, right angle, shielded	JI329	1

Other Components

Description	E-mu P/N	Quantity
.1µF 50V Ceramic Capacitor	CC419	8
2.2µF 16V Axial 20%	CT323	1
74ACT125 Quad Buffer	IT443	1
270Ω, Resistor, 1/10W, 1%	RR411	2
0Ω, Resistor, 1/10W, 1%	RR420	2
100Ω, Resistor, 1/10W, 1%	RR422	2
4.7KΩ, Resistor, 1/10W, 1%	RR432	2
10Ω, Resistor, 1/10W, 1%	RR453	2
Polyswitch Fuse	ZF309	1
Inductor, 65Ω at 100MHz	ZI319	4
AES Digital Audio Transformer, 1:1	ZT320	2

Ultra Parts List

Ordering EOS Parts

Parts can be ordered by written order or by phone. When ordering parts, you must order by E-MU part number. The minimum charge for parts orders is $15.00. Emergency rush orders can usually be sent out the same day if the order is received by 11:00am PST. Parts orders can be placed between the hours of 8:30am and 5:30pm PST, Monday through Friday.

E-MU Customer Service Department: (831) 438-1921

Main PCB

Capacitors

Description	E-mu P/N	Qty
47 µF 16V Aluminum Radial	CA326	1
470 µF 16V Aluminum	CA444	1
2200 pF 50V Ceramic	CC392	18
100 pF 50V Ceramic	CC413	7
.01µF 50V Ceramic	CC417	63
.1 µF 50V Ceramic	CC419	35
22 pF 50V Ceramic	CC421	4
1000 pF 50V Ceramic	CC423	6
4700 pF 50V Ceramic	CC425	1
1µF 16V 80/20	CC439	43
270 pF 50V	CC440	16
2.2 µF 16V Tantalum	CT323	9
10 µF 16V Tantalum	CT326	9
1 µF 16V Tantalum	CT328	11

Capacitor Locations

Capacitor Location	E-mu Part Number	Capacitor Location	E-mu Part Number
C1	CC423	C2	CC423
C3	CC423	C4	CC423
C5	CC419	C6	CC440
C7	CC392	C8	CC419
C9	CC440	C10	CC392
C11	CC419	C12	CC440
C13	CC392	C14	CC419
C15	CC440	C16	CC392
C17	CC419	C18	CC440
C19	CC392	C20	CC419
C21	CC440	C22	CC392
C23	CC419	C24	CC440
C25	CC392	C26	CC419
C27	CC440	C28	CC392
C29	CC419	C30	CC440

Capacitor Location	E-mu Part Number	Capacitor Location	E-mu Part Number
C31	CC392	C32	CC419
C33	CC440	C34	CC392
C35	CC419	C36	CC440
C37	CC392	C38	CC419
C39	CC440	C40	CC392
C41	CC419	C42	CC440
C43	CC392	C44	CC419
C45	CC440	C46	CC392
C47	CC419	C48	CC440
C49	CC392	C50	CC419
C51	CC440	C52	CC392
C53	CT326	C54	CC439
C55	CC413	C56	CC413
C57	CC439	C58	CC439
C59	CC439	C60	CC417
C61	CC419	C64	CT326
C65	CC421	C66	CC421
C67	CT326	C68	CT326
C69	CT323	C70	CT323
C71	CC419	C72	CT328
C73	CT328	C74	CC419
C75	CT323	C76	CT328
C77	CT328	C78	CC419
C79	CC419	C80	CC419
C81	CT328	C82	CT328
C83	CC419	C84	CC439
C85	CC421	C86	CT328
C87	CT328	C88	CC419
C89	CC421	C90	CC439
C91	CC419	C92	CT323
C93	CT323	C94	CC439
C95	CC439	C96	CT328
C97	CC439	C98	CC392
C99	CC423	C100	CC392
C101	CT328	C102	CC439
C103	--	C104	CC439
C105	CC439	C106	CC419

Capacitor Location	E-mu Part Number	Capacitor Location	E-mu Part Number
C107	CC419	C108	CC439
C109	CC439	C110	CC417
C111	CC419	C112	CC439
C113	CT326	C114	CC417
C115	CC439	C116	CC417
C117	CC417	C118	CC417
C119	--	C120	CT323
C121	CC419	C122	CT323
C123	CC419	C124	CC419
C125	CC419	C126	CT328
C127	CC417	C128	CC417
C129	CC417	C130	CC417
C131	CC417	C132	CT326
C133	CC417	C134	CC439
C135	CC439	C136	CC439
C137	CC439	C138	CA444
C139	CC439	C140	CC439
C141	CC417	C142	CC417
C143	CC417	C144	CC417
C145	CC417	C146	CC417
C147	CC417	C148	CC417
C149	CC417	C150	CC417
C151	CT326	C152	CC439
C153	CC417	C154	CC439
C155	CC417	C156	CC417
C157	CC439	C158	--
C159	CC417	C160	CT326
C161	CC439	C162	CC439
C163	CC417	C167	CC417
C169	CC417	C170	--
C171	CC417	C172	CC417
C173	CC417	C174	CC417
C175	CC417	C176	CC417
C177	CC417	C178	CC439
C179	CC417	C180	CC439
C181	CC439	C182	CC439
C183	CC417	C184	--

Capacitor Location	E-mu Part Number	Capacitor Location	E-mu Part Number
C185	CC439	C186	CC417
C187	CC417	C188	CC417
C189	CC417	C190	CC417
C193	CC417	C194	CC417
C195	CC417	C196	CC417
C197	CC417	C198	CC417
C199	CC417	C200	CC439
C201	CC417	C202	C202
C203	CC439	C204	CC439
C205	CC417	C206	CC439
C207	CC417	C208	CC439
C209	CC439	C210	CC439
C211	CC423	C212	CC417
C213	CA326	C214	CC417
C215	CC417	C216	CC417
C217	CC417	C218	CC417
C221	CC439	C222	CC439
C223	CT326	C224	CC439
C225	CC419	C500	CT323
C501	CC439	C502	--
C503	CT323	C504	CC419
C507	CC413	C508	CC413
C509	CC413	C510	CC413
C511	CC419	C512	CC417
C513	CC417	C514	CC417
C515	CC417	C516	--

Resistors

Description	E-mu P/N	Quantity
4.7Ω x 4 Resistor Network 1/16W 5%	RN348	36
47Ω x 4 Resistor Network 1/16W 5%	RN351	13
1KΩ x 4 Resistor Network 1/16W 5%	RN352	4
220Ω x 4 Resistor Network 1/16W 5%	RN454	8
2.67KΩ, 1/10W, 1%	RP391	3
10KΩ, 1/10W, 1%	RP392	27
100KΩ, 1/10W, 1%	RP393	2
1KΩ, 1/10W, 1%	RP402	19
3.24KΩ, 1/10W, 1%	RP406	10
3.92KΩ, 1/10W, 1%	RP407	32
4.99KΩ, 1/10W, 1%	RP409	11
9.09KΩ, 1/10W, 1%	RP410	2
45.3KΩ, 1/10W, 1%	RP411	4
11KΩ, 1/10W, 1%	RP416	2
16.5KΩ, 1/10W, 1%	RP437	16
47Ω, 1/10W, 5%	RR409	44
150Ω, 1/10W, 5%	RR410	9
270Ω, 1/10W, 5%	RR411	3
470Ω, 1/10W, 5%	RR421	2
1.6KΩ, 1/10W, 5%	RR440	18
10Ω, 1/10W, 5%	RR453	19
560Ω, 1/10W, 5%	RR463	17
22Ω, 1/2W, 10%	RW307	2

Resistor Locations

Resistor Location	E-mu Part Number	Resistor Location	E-mu Part Number
RN1-RN7	RN351	RN12-RN22	RN348
RN23	RN348	RN24	RN352
RN25	RN348	RN26	RN352
RN27-RN31	RN351	RN32	RN351
RN33	RN348	RN34	RN348
RN35	--	RN36	RN348
RN37	RN348	RN38	RN348
RN39	RN348	RN40	RN348
RN41	RN348	RN42	RN348
RN43	RN348	RN46	RN348

Resistor Location	E-mu Part Number	Resistor Location	E-mu Part Number
RN47	RN348	RN48	RN348
RN49	RN348	RN50	RN352
RN51	RN352	RN52	RN348
RN53	RN348	RN54	RN348
RN55	RN348	RN56	RN348
RN57	RN348	RN58	RN454
RN59	RN454	RN60	RN454
RN61	RN348	RN62	RN348
RN63-RN67	RN454	RN68	RN348
R1	RR410	R2	RR410
R3	RR410	R4	RR410
R5	RR410	R6	RR409
R7	RR453	R8	RP407
R9	RR440	R10	RP437
R11	RP392	R12	RR440
R13	RP437	R14	RP392
R15	RR409	R16	RR453
R17	RP407	R18	RR409
R19	RR453	R20	RP407
R21	RR440	R22	RP437
R23	RP392	R24	RR440
R25	RP437	R26	RP392
R27	RR409	R28	RR453
R29	RP407	R30	RR409
R31	RR453	R32	RP407
R33	RR440	R34	RP437
R35	RP392	R36	RR440
R37	RP437	R38	RP392
R39	RR409	R40	RR453
R41	RP407	R42	RR409
R43	RR453	R44	RP407
R45	RR440	R46	RP437
R47	RP392	R48	RR440
R49	RP437	R50	RP392
R51	RR409	R52	RR453
R53	RP407	R54	RR409
R55	RR463	R56	RP407
R57	RR440	R58	RP437
R59	RP392	R60	RR440
R61	RP437	R62	RP392

Resistor Location	E-mu Part Number	Resistor Location	E-mu Part Number
R63	RR409	R64	RR463
R65	RP407	R66	RR409
R67	RR463	R68	RP407
R69	RR440	R70	RP437
R71	RP392	R72	RR440
R73	RP437	R74	RP392
R75	RR409	R76	RR463
R77	RP407	R78	RR409
R79	RR463	R80	RP407
R81	RR440	R82	RP437
R83	RP392	R84	RR440
R85	RP437	R86	RP392
R87	RR409	R88	RR463
R89	RP407	R90	RR409
R91	RR463	R92	RP407
R93	RR440	R94	RP437
R95	RP392	R96	RR440
R97	RP437	R98	RP392
R99	RR409	R100	RR463
R101	RP407	R102	RP409
R103	RP409	R104	RP392
R105	RP409	R106	RP409
R107	RP392	R108	RP409
R109	RP409	R110	RP409
R111	RP409	R112	RP407
R113	RR409	R114	RR411
R115	RP402	R116	RP402
R117	RP402	R118	RP407
R119	RP407	R120	RP392
R121	RP392	R122	RP392
R123	RP392	R124	RR409
R125	RR409	R126	RW307
R127	RW307	R128	RP402
R129	RP411	R130	RP391
R131	RP391	R132	RR453
R133	RP402	R134	RP402
R135	RP407	R136	
R137	RP406	R138	RP409
R139	RP402	R140	RP410
R141	RP406	R142	RP406

Resistor Location	E-mu Part Number	Resistor Location	E-mu Part Number
R143	RP402	R144	RR453
R145	RP406	R146	RP409
R147	RP410	R148	RP406
R149	RP411	R150	RP416
R151	RP402	R152	RP416
R153	RP406	R154	RR453
R155	RP402	R156	RP411
R157	RP393	R158	RP393
R159	RR453	R160	RP402
R161	RP402	R162	RP406
R163	RP406	R164	RP406
R165	RP406	R166	RR410
R167	RR410	R168	RR410
R169	RR410	R170	RR453
R171	RP407	R172	RP402
R173	RR409	R176	RP402
R177	RR409	R178	RP407
R179	RP407	R180	RP407
R181	RP407	R182	RR409
R183	RR453	R184	RR409
R185	RR409	R186	RR409
R187	RR409	R188	RR409
R189	RR409	R190	RR409
R191	RR409	R192	RR409
R193	RR409	R194	RR409
R195	RR409	R196	RR453
R197	RP391	R198	RR409
R199	RR409	R200	RR440
R201	RR421	R202	RP402
R203	RR409	R204	RR453
R205	RR453	R206	RR453
R207	RR453	R208	RP407
R209	RP407	R210	RR453
R211	RR453	R212	RR453
R213	RR453	R214	RR453
R215	RR453	R216	RR453
R217	RR453	R218	RP407
R219	RR453	R220	RP407
R221	RR409	R222	RR409
R223	RP402	R224	RR409

Resistor Location	E-mu Part Number	Resistor Location	E-mu Part Number
R225	RP409	R226	RP392
R227	RP392	R228	RP392
R229	RP411	R230	RP407
R231	--	R232	RR421
R233	RR440	R234	RP402
R235	RR411	R236	--
R499	--	R500	RR411
R501	RR409	R502	RR409
R503	RR409	R504	RR409
R509	RP407	R510	--
R515	RP402	R516	RP392
R517	RP392	R518	RP402
R519	RP407	R520	--

Integrated Circuits

Description	E-mu P/N	Quantity
G-Chip Sound Engine (2.0)	IC402	2
EMU8000 Chip	IC405	1
H-chip Digital Filter (1.5)	IC413	4
CY2292-375 Clock Generator SO16	IC447	1
FPGA Altera 6016 (Custom Chip)	IC452	1
82078 Floppy Disk Controller	IC10483	1
85C80 SCSI/SCC Controller	II383	1
Digital Audio Receiver	II394	1
Phase Lock Loop TLC29321 50MHz	II400	1
AV 9170 PLL/Sync	II401	1
CS4329 ∑Δ Stereo 20-bit DAC	II410	4
CS5335 ∑Δ Stereo 20-bit ADC	II411	1
FET Dual Audio Amp	IL361	12
LM3940 +3.3V Voltage Regulator TO-220	IL374	1
78M05 +5V .5A Voltage Regulator	IL376	1
µP Supervisor Chip SOT-23	IL385	1
18x Active SCSI Terminator	IL386	1
93C46 64 X 16 EEPROM	IM400	1
1K x 9 FIFO ≥40 ns	IM413	1
256K x 4 80NS DRAM	IM418	1
5206 3.3V Coldfire µProcessor	IM478	1
Programmed PLD - E4 Ultra	IP1030	1
K-Chip PLCC-68	IT433	1
74ACT244 Octal Buffer/Driver	IT434	2
74ACTQ04 Hex Inverter	IT441	1
74HC4052 Mux/Demux	IT448	2
74HCT125 Quad Buffer	IT460	1
74VHCT244 Octal Buffer/Driver	IT492	10
74VHCT245 Octal Tranceiver	IT493	4
74VHCT374 Octal Latch	IT495	2

Integrated Circuit Locations

IC Location	E-mu Part Number	IC Location	E-mu Part Number
VR1	IL376	VR3	IL374
U1	IL361	U2	IL361
U3	IL361	U4	IL361
U5	IL361	U6	IL361
U7	IL361	U8	IL361

IC Location	E-mu Part Number	IC Location	E-mu Part Number
U9	IL361	U10	IT492
U11	IM418	U12	--
U13	II383	U16	IL386
U17	IL361	U18	II410
U19	IT448	U20	II410
U21	IT448	U22	II410
U23	IL361	U24	II410
U25	IL361	U26	II411
U27	--	U28	IT492
U29	IC405	U30	IT493
U31	IT493	U32	IC447
U33	IT460	U34	IT492
U35	II401	U36	--
U37	II400	U38	IL385
U39	IT441	U40	IM400
U41	IT434	U42	IC402
U43	IC413	U44	IC413
U45	IC452	U46	IM413
U47	--	U48	IT493
U49	IT493	U50	IT492
U51	IT492	U52	IT434
U55	IP1030	U56	--
U57	IT492	U58	IC10483
U61	IT433	U62	IT495
U63	IT495	U64	IT492
U65	IM478	U66	--
U501	IT492	U502	IT492
U503	IT492	U504	--

Other Components

Description	E-mu P/N	Quantity
SMD914 Switching Diode	DD316	10
SBR Diode 1.0A 40V	DD326	2
15V TVS Zener Bipolar Diode SOT-23	DD327	22
BAV99LT1 Dual Switching Diode SOT-23	DD335	2
PC400 Iso-Optolator	OE303	1
2N3906 PNP Transistor	QQ308	8
3904 NPN Transistor	QQ309	2
2222A NPN Transistor SOT-223	QQ315	1
J109 N-channel JFET	QQ324	20
Black Anodized Heatsink, TO-220	ZE324	1
Polyswitch Fuse 1A 60V	ZF309	1
EMI Bead 600Ω @ 100MHz	ZI328	16
DC-AC Inverter for LCD	ZV316	1
16 MHz Crystal Oscillator	ZX318	1

Other Component Locations

Component Location	E-mu Part Number
D1-D20	DD327
D21	DD316
D22	DD327
D23	DD316
D24	DD327
D25-D26	DD335
D27-D28	DD326
D28-D35	DD316
D501	DD316
FS1	ZF309
L1-L7	ZI328
L12	ZI328
L500-L504	ZI328
L513-L515	ZI328
Q1-Q16	QQ324
Q17	QQ308
Q18	QQ308
Q19	QQ324
Q20	QQ308

Component Location	E-mu Part Number
Q21	QQ308
Q22	QQ324
Q23	QQ309
Q24	QQ309
Q25	QQ324
Q26	QQ324
Q27	QQ308
Q28	QQ308
Q29	QQ315
Q500	QQ308
Q501	QQ308
U12	OE303
VR2	ZV316
Y1	ZX318

Connectors

Description	E-mu P/N	Quantity
1/4" Phone Jack, Closed Ring	JA309	10
28-pin LP DIP Socket	JC308	1
68-pin SMD Socket	JC341	2
PROM Socket SMD	JC357	1
72-pin SIMM Socket	JC361	8
G2.0 PGA121 Socket	JC364	1
5-position, Right Angle Triform	JI327	1
SCSI Connector, Shielded, Right Angle	JI332	1
.156 6-Pos. Header, Male, Locking	JP356	1
.100 x 4 Locking Power Header	JP380	4
2.5 mm 4-pos, k eyed, Power Header	JP397	1
50-pin Ribbon Cable Header	JR327	2
2 x 10 Header .1 cntr	JR333	1
Header Shunt	JR334	5
1 x 2 Header	JR335	2
26-pin, Dual Row Header .1 center	JR337	1
34-pin Dual Row Header	JR338	4
40-pin, Dual Row Header, .1 center	JR339	1
.100 x 6 Locking Header	JR356	1
3-Position Locking Header	JR360	4
8-pin, Dual Row Header .1 center	JR371	2
120-pin PCI Socket	JR403	1

Connector Locations

Connector Location	E-mu Part Number
CN1	JI327
CN2	JI332
CN3	JR360
CN4	JR338
CN5	JR327
CN6	JR339
CN7	JP356
CN8	JP380
CN9	JR403
CN10	JR360
CN11	JR327
CN12	JP380
CN13	JP380

Connector Location	E-mu Part Number
CN14	JR371
CN15	JR371
CN17	JR337
CN18-CN23	JC361
CN26	JP380
CN28	JR338
CN30	JP397
CN31	JR338
CN32	JR333
CN33	JR360
CN34	JC361
CN35	JC361
CN500	JR360
CN501	JR338
J1-J10	JA309
U27	JC308
U54	JC341
U55	JC357
U59	JC364
U60	JC341
W4	JR335
W6	JR335

Front Panel PCBA

Connectors

Description	E-mu P/N	Quantity
Audio Jack 1/4” stereo, right angle, PCMT	JA317	1
3-pin Header .1 center, right angle, locking	JR372	2

Other Components

Description	E-mu P/N	Quantity
Ellipse Key printed “0”	AM105-00	1
Ellipse Key printed “1”	AM105-01	1
Ellipse Key printed “2”	AM105-02	1
Ellipse Key printed “3”	AM105-03	1
Ellipse Key printed “4”	AM105-04	1
Ellipse Key printed “5”	AM105-05	1
Ellipse Key printed “6”	AM105-06	1
Ellipse Key printed “7”	AM105-07	1
Ellipse Key printed “8”	AM105-08	1
Ellipse Key printed “9”	AM105-09	1
Ellipse Key printed “INC”	AM107-00	1
Ellipse Key printed “DEC”	AM107-01	1
Ellipse Key printed “+/-”	AM107-02	1
Ellipse Key printed “.”	AM107-03	1
Lens Assembly Ultra Rack	AM139-01	1
240 x 64 LCD Assembly w/Header	AP441	1
Mounting Bracket - RC325	EM359	1
3U high Insert Panel	EM485	1
Encoder Panel Knob	EM504	1
Front Panel Mounting Plate	EM531	1
3U Front bezel with standoffs	EP416-03	1
Arrow Button Cap	EP417	4
Ellipse Button Cap	EP418	20
Ball Bearing for Encoder	HG001	1
Spline Knob, 6mm , Grey on Black	HK341	1
4-40 Kepf Nut	HN304	7
7 mm ID 9/10mm for RC319, RC320	HN313	1
4-40 x 1/4 Phillips Screw	HS352	4
6-32 x 1/4 Self -tap, Phillips Screw	HS393	1

Description	E-mu P/N	Quantity
4-20 x 3/8 Phillips Screw, plastic	HS431	9
Nut, 7mm, 9/10mm A/F	HN313	1
Washer, .287 x .475 x .020	HW443	1
Red LED	LP302	8
Green LED	LP308	2
50KΩ Res Pot	RC327	1
10KΩ, 1/10W, 1%	RR309	2
Rotary Encoder, 36 Det, 90 VC/rev, D-shaft	SW345	1
Momentary SPST Switch Without Cap	SW340	38
Rotary Encoder, 24 Det, 90 VC/rev, D-shaft	SW345	1
RFI Suppression Core for Ribbon Cable	ZI321	1
E-MU Logo Label	ZL463	1
Ultra Rack Overlay Panel	ZL505-01	1
Rubber Wheel Cushion	ZR323	1

Either can be used

Final Assembly

Cables

Description	E-mu P/N	Quantity
Headphone Cable	AC355	1
Internal SCSI Cable	AC368	1
Encoder Interface Cable	AC369	1
LCD Ribbon Cable (1 x 14)	AC371	1
2 x 17 Front Panel Ribbon Cable	AC376	1
Floppy Drive Data Cable (2 x 17)	AC378	1
AC-Power Supply Cable Assy.	AC379	1
12VDC Fan Cable	AC381	1
SYQUEST Power Cable *(optional)*	AC386	1
DC Harness	AC393	1
2 x 10 Ribbon Cable 7.5”	AC405	1
Internal SCSI Cable	AC412	1
Floppy Drive Power Cable	AC420	1
Volume Pot Cable	AC387	1
AC Power Cable	AC413	1
SCSI Cable (Int./Ext.)	AC419	1
DC Power Cable	AC420	1
2 x 20 Ribbon Cable	AC10148-01	1
Power Cable	WC307	1
MIDI Cable, 10 ft.	WC309	1

Miscellaneous

Description	E-mu P/N	Quantity
Rack Ears	EM477-03	1
Chassis Top	EM478	1
Option Port Cover Plate	EM482	3
Chassis Base, 3U high	EM530	1
Power Supply Cover	EM532	1
Power Button Extension	EP419	1
Encoder Knob	EP421	1
Power Button	EP422-01	1
6-32 Kepf Nut	HN121	3
3/8-32 Panel Nut, nickel	HN135	10

Description	E-mu P/N	Quantity
4-40 x 1/4 Phillips Screw	HS352	10
6-32 x 1/4 Phillips Screw	HS353	11
#4 x 1-1/4 Phillips Screw	HS381	2
6-32 x 1/4 Phillips Screw, x-sm, (Black)	HS386	7
6-32 x 1/4 Phillips Screw, self tap	HS393	4
4-20 x 3/8 Phillips Screw, plastic	HS431	2
7/16” Nylon clip-latch Standoff	HS448	6
#2 x 1/4 PHTCS Phllips Screw	HS450	1
8-32 x 3/8 Phillip Screws for Rack Ears	HS454	4
M3 x 6mm Screw PHMS XSEM set	HS463	4
4-40 x 3/16 P/PH Taptite Screw	HS476	4
Finger Guard for 40mm Fan	ZE334	1
Foot With Push Rivet	ZR346	4
Power Supply Insulator	ZR353-01	1
15W 100-250VAC Power Supply	ZV315	1

Option Cards Parts List

Ordering EOS Parts

Parts can be ordered by written order or by phone. When ordering parts, you must order by E-MU part number. The minimum charge for parts orders is $15.00. Emergency rush orders can usually be sent out the same day if the order is received by 11:00 am PST. Parts orders can be placed between the hours of 8:30am and 5:30pm PST, Monday through Friday.

E-MU Customer Service Department: (831) 438-1921

MIDI Option Card

Capacitors

Description	E-mu P/N	Qty
.1 µF 50V Ceramic	CC419	5
1000pF 50V Ceramic	CC423	1
10µF 16V Tantalum	CT326	1

Capacitor Locations

Capacitor Location	E-mu Part Number	Capacitor Location	E-mu Part Number
C1	CC419	C2	CT326
C3	CC419	C4	CC419
C5	CC419	C7	CC423
C8	CC419		

Resistors

Description	E-mu P/N	Quantity
10KΩ, 1/10W, 5%	RR309	1
33Ω, 1/10W, 5%	RR408	6
150Ω, 1/10W, 5%	RR410	5
270Ω, 1/10W, 5%	RR411	1
100KΩ, 1/10W, 5%	RR414	2
4.7KΩ, 1/10W, 5%	RR432	1

Resistor Locations

Resistor Location	E-mu Part Number	Resistor Location	E-mu Part Number
R1	RR410	R3	RR408
R4	RR408	R6	RR408
R7	RR408	R10	RR414
R11	RR408	R12	RR414
R13	RR432	R14	RR408
R15	RR410	R16	RR410
R17	RR410	R18	RR411
R19	RR410	R21	RR309

Integrated Circuits

Description	E-mu P/N	Quantity
85030 16MHz SCC, PLCC-44	II391	1
Programmed PLD - MIDI/Host Option	IP858	1

Integrated Circuit Locations

IC Location	E-mu Part Number	IC Location	E-mu Part Number
U1	IP858	U3	II391

Other Components

Description	E-mu P/N	Quantity
Ribbon Cable Assembly	AC377	1
SMD914 Switching Diode	DD316	1
Metal MIDI Card Bracket	EM496	1
4-40 x 1/4 Phillip Screw	HS352	4
#2 x 1/4 Phillip Screw	HS450	2
20-pin LP DIP Socket	JC106	1
5-pin DIN Socket, Right Angle, Shielded	JI329	2
Header, 2 x 25, Right Angle, .1 center	JR379	1
PC400 Iso-Optolator	OE303	1
2N3906 PNP Transistor	QQ308	1
Inductor, 750Ω @ 100MHz	ZI306	2
16MHz Xtal Oscillator	ZX314	1

EIV Effects Option Card

Capacitors

Description	E-mu P/N	Qty
.01 µF 50V Ceramic 10%	CC417	9
.1 µF 50V Ceramic	CC419	8
10µF 16V Tantalum	CT326	2

Capacitor Locations

Capacitor Location	E-mu Part Number	Capacitor Location	E-mu Part Number
C1	CC417	C2	CT326
C3	CC419	C4	CC417
C5	CC419	C6	CC417
C7	CC417	C8	CC419
C9	CC419	C10	CC419
C11	CC417	C12	CC417
C13	CC419	C14	CC419
C15	CT326	C16	CC417
C20	CC417	C21	CC419
C22	CC417		

Resistors

Description	E-mu P/N	Quantity
47Ω, 1/10W, 5%	RR409	9
10KΩ, 1/10W, 5%	RR434	1

Resistor Locations

Resistor Location	E-mu Part Number	Resistor Location	E-mu Part Number
R5	RR409	R6	RR409
R7	RR409	R8	RR409
R12	RR409	R13	RR409
R14	RR409	R15	RR434
R16	RR409	R17	RR409

Integrated Circuits

Description	E-mu P/N	Quantity
E-MU 8000 DSP Engine	IC405	1
AV9170, PLL/Sync	II401	1
256 x 4 DRAM, ≤80nS	IM418	1
Programmed PAL, G0.5 FX PAL, 6900	IP826	1
74HCT373 Octal Latch	IT431	1
74ACT299 Shift Register	IT447	1
74HCT299 Shift Register	IT451	2

IC Locations

IC Location	E-mu Part Number	IC Location	E-mu Part Number
U1	IT447	U2	IT451
U3	IT451	U4	IM418
U5	IC405	U8	IP826
U9	IT431	U10	II401

Other Components

Description	E-mu P/N	Quantity
7/16”, .125 diameter PCB Support Screw	HS470	2
SMD Socket PLCC-44	JC357	1
Socket 2 x 17 PCMT, .1 center	JR369	2
Inductor, 47Ω @ 100MHz	ZI319	1

8-Channel Audio Output Card (Octopus)

Capacitors

Description	E-mu P/N	Qty
680 pF 50V Ceramic	CC415	8
3900 pF 50V Ceramic	CC416	8
.01 µF 50V Ceramic 10%	CC417	20
.1 µF 50V Ceramic, 20%	CC419	41
10 µF 16V Tantalum, 5%	CT326	20
47 µF 16V Tantalum, 10%	CT327	4

Capacitor Locations (Lower Board)

Capacitor Location	E-mu Part Number	Capacitor Location	E-mu Part Number
C1	CT327	C2	CC419
C3	CT326	C4	CT327
C5	CT326	C6	CT326
C7	CT326	C8	CT326
C9	CC417	C10	CC419
C11	CC419	C12	CT326
C13	CC417	C14	CC419
C15	CC419	C16	CT326
C17	CT326	C18	---
C19	CC417	C20	CC419
C21	CC419	C22	CT326
C23	CC417	C24	CC419
C25	CC419	C26	CC419
C27	CC419	C28	CC419
C29	CC419	C30	CC415
C31	CC416	C32	CC419
C33	CC415	C34	CC416
C35	CC419	C36	CC417
C37	CC417	C38	CC417
C39	CC417	C40	CC419
C41	CC419	C42	CC415
C43	CC416	C44	CC419
C45	CC417	C46	CC417

Capacitor Location	E-mu Part Number	Capacitor Location	E-mu Part Number
C47	CC417	C48	CC419
C49	CC419	C50	CC415
C51	CC416	C52	CC419
C53	CC417	C54	CC417
C55	CC417	C56	CC417
C57	CC419	C58	CC419
C59	CC419	C60	CC419
C61	CC417		

Capacitor Locations (Upper Board)

Capacitor Location	E-mu Part Number	Capacitor Location	E-mu Part Number
C1	CT327	C2	CT326
C3	CT327	C4	CT326
C5	CT326	C6	CC419
C7	CC416	C8	CC415
C9	CC417	C10	CC419
C11	CC419	C12	CT326
C13	CC419	C14	CT326
C15	CC419	C16	CC416
C17	CC415	C18	CC417
C19	CC419	C20	CC419
C21	CT326	C22	CT326
C23	CC419	C24	CT326
C25	CC419	C26	CC416
C27	CC415	C28	CC417
C29	CC419	C30	CC419
C31	CT326	C32	CC419
C33	CC419	C34	CT326
C35	CC419	C36	CC416
C37	CC415	C38	CC417
C39	CC419	C40	CC419

Resistors

Description	E-mu P/N	Quantity
1.33KΩ, 1/10W, 1%	RP389	16
2.74KΩ, 1/10W, 1%	RP405	16
2KΩ, 1/10W, 1%	RP414	8
3.01KΩ, 1/10W, 1%	RP415	8
1KΩ, 1/10W, 5%	RR305	2
47Ω, 1/10W, 5%	RR409	55
150Ω, 1/10W, 5%	RR410	1
4.7KΩ, 1/10W, 5%	RR432	1
10KΩ, 1/10W, 5%	RR434	7

Resistor Locations (Lower Board)

Resistor Location	E-mu Part Number	Resistor Location	E-mu Part Number
R1	RR434	R2	RR434
R3	RR434	R4	RR434
R5	RR434	R6	RR434
R7	RR409	R8	RR409
R9	RR409	R11	RR409
R33	RR409	R34	RR432
R35	RR409	R36	RP405
R37	RP405	R38	RP415
R39	RP414	R40	RP389
R41	RP389	R42	RR409
R43	RR409	R44	RP405
R45	RP405	R46	RP415
R47	RP414	R48	RP389
R49	RP389	R50	RR409
R51	RR409	R52	RR409
R53	RR409	R54	RR409
R55	RR409	R56	RR409
R57	RR409	R58	RR409
R59	RR409	R60	RR409
R61	RR410	R62	RR409
R63	RP405	R64	RP405
R65	RP415	R66	RP414
R67	RP389	R68	RP389
R69	RR409	R70	RR409

Resistor Location	E-mu Part Number	Resistor Location	E-mu Part Number
R71	RR409	R72	RR409
R73	RP405	R74	RP405
R75	RP415	R76	RP414
R77	RP389	R78	RP389
R79	RR434	R80	RR409
R81	RR409		

Resistor Locations (Upper Board)

Resistor Location	E-mu Part Number	Resistor Location	E-mu Part Number
R1	RR305	R2	RR305
R3	RP309	R4	RP415
R5	RP414	R6	RP309
R7	RP405	R8	RR409
R9	RR409	R10	RP405
R11	RP309	R12	RP415
R13	RP414	R14	RP309
R15	RP405	R16	RR409
R17	RR409	R18	RP405
R19	RP309	R20	RP415
R21	RP414	R22	RP309
R23	RP405	R24	RR409
R25	RR409	R26	RP405
R27	RP309	R28	RP415
R29	RP414	R30	RP309
R31	RP405	R32	RR409
R33	RR409	R34	RP405

Integrated Circuits

Description	E-mu P/N	Quantity
74HCT273	IC386	1
E-MU H-1.5 Chip	IC413	4
18-Bit Serial DAC	II379	8
7905 -5V Regulator	IL112	1
7805 +5V Regulator	IL307	1
5532 Dual BiFET, Lo-Noise OpAmp, SO8	IL361	8
Programmed PAL, Chip Select, 6313	IP827	1
74ACTQ16245 Transceiver	IT445	1

IC Locations (Upper Board)

IC Location	E-mu Part Number	IC Location	E-mu Part Number
U1	II379	U2	IL361
U3	II379	U4	IL361
U5	II379	U6	IL361
U7	II379	U8	IL361
U9	IC386	U10	IP827
U11	IC413	U12	IC413
U13	IT445	U14	IC413
U15	IC413		

IC Locations (Lower Board)

IC Location	E-mu Part Number	IC Location	E-mu Part Number
U1	II379	U2	II379
U3	II379	U4	II379
U5	IL361	U6	IL361
U7	IL361	U8	IL361
VR1	IL112	VR2	IL307

Other Components

Description	E-mu P/N	Quantity
Zener Trans-Suppressor Diode, Bi-Dir	DD324	8
Metal Bracket for 8-Chan Output Cards	EM525	1
3/8-32 Nut, Nickel	HN135	8
4-40 Kepf Nut	HN304	2
4-40 x 3/8 Phillip Screw	HS302	2
4-40 x 1/4 Phillip Screw	HS352	4
1/4" Phone Jack, Closed Ring	JA309	4
PROM Socket	JC357	1
Header, 2 x 10, .1 center	JR333	1
Header, 2 x 4, .1 center	JR371	1
Header, 2 x 25, .1 center, Rt Angle	JR379	1
Header, 2 x 4, .1 center, Rt Angle	JR380	1
2907A PNP Transistor SOT-223	QQ314	1
2222A NPN Transistor SOT-223	QQ315	1
Black Anodized Aluminun Heatsink, TO-220	ZE324	2
Inductor, 750Ω @ 100MHz	ZI306	2

16 Out/8 In ADAT Card

Capacitors

Description	E-mu P/N	Qty
.01 µF 50V Ceramic 10%	CC417	21
.1 µF 50V Ceramic	CC419	17
10µF 16V Tantalum	CT326	4

Resistors

Description	E-mu P/N	Quantity
47Ω X 4 Resistor Network, 1/16W, 5%	RN351	1
1KΩ X 4 Resistor Network, 1/16W, 5%	RN352	2
10KΩ X 4 Resistor Network, 1/16W, 5%	RN353	2
47Ω, 1/10W, 5%	RR409	12
10KΩ, 1/10W, 5%	RR434	16
10Ω, 1/10W, 5%	RR453	3
220Ω, 1/10W, 5%	RR468	1

Integrated Circuits

Description	E-mu P/N	Quantity
H1.5 Chip	IC413	4
Programmed FPGA , Altera 6016	IC456	1
AUSY-2 PQFP-80	II414	1
AUSY-2 VCO, S08	II415	2
1K x 9 FIFO ≥40nS	IM413	1
E4 ADAT PAL	IP1048	1
EPLD EPM7032 10nS	IC414	1
74ACT125 Quad Buffer	IT443	1
74VHCT245 Octal Transceiver	IT493	2

Other Components

Description	E-mu P/N	Quantity
Ribbon Cable Assembly, IDC, 2 x 4, 10”	AC10220-01	1
Cable Assembly (Headphone Type)	AC355	1
Ribbon Cable Assembly	AC377	1
ADAT Card Metal Bracket	EM581-01	1
4-40 x 1/4 PHMS Phillip Screw	HS352	4
#4 x 1/4 Phillip Plastilock Screw	HS401	2
SMD Socket	JC357	1
Optical Transmit/Receive Port, PC mount	JI331	1
Optical Transmit Port, PC mount	JI335	1
Header, 3-pin, , .1 center, locking	JR360	2
Header, 2 x 4 .1 center	JR371	2
Header 2 x 25, Rt Angle , .1 center	JR379	1
2 x .1 Header Shunt	JR334	1
ADAT Optical Lightpipe, 1 Meter	WC329	2

REVISIONS					
ECO	ZONE	LTR	DESCRIPTION	DATE	APPR.
2551		A	INITIAL RELEASE	10/20 1994	DBF

TO DIGITAL PCB

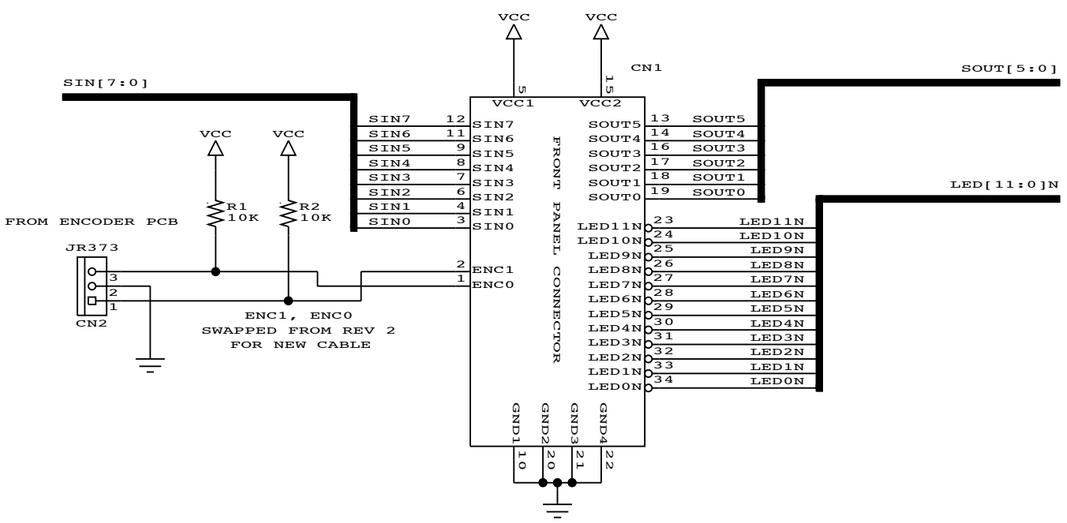

GROUND TEST POINTS

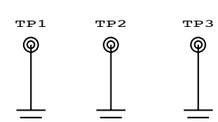

CHASSIS MOUNTING HOLES

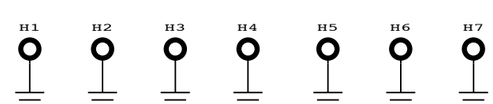

E-IV FRONT PANEL BOARD

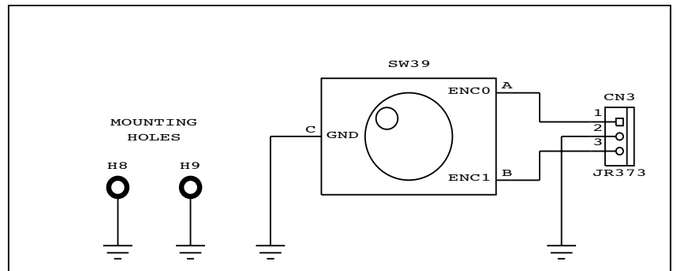

ENCODER BREAKAWAY PCB

VOLUME POT

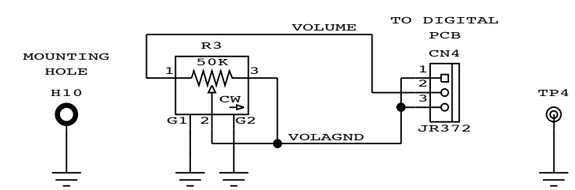

HEADPHONES JACK

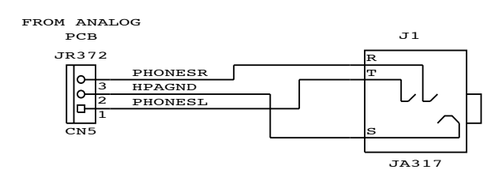

HEADPHONES BREAKAWAY PCB

1

E-mu Systems, Inc.
applied magic for the arts
1600 Green Hills Road
Scotts Valley, California 95066

DRAWING TITLE: SCHEMATIC PC414
11-1-1994_10:58

SIZE	REV.	DRAWING NO.
D	A	SK414

SCALE | DATE | APPR
SHEET: 1 OF 2 | DRAWN BY DBF

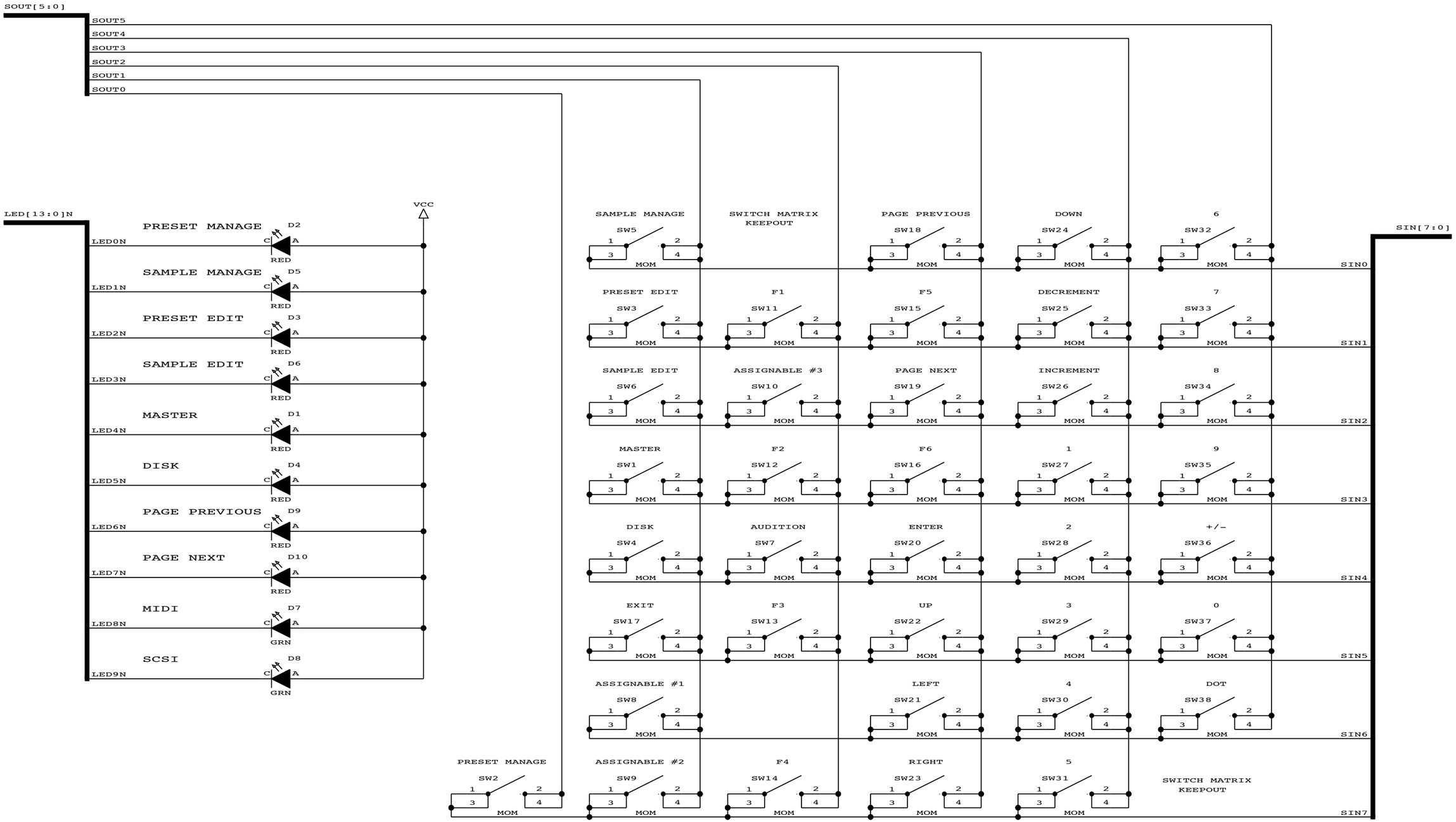

2

SK414 REV A

E-IV FRONT PANEL BOARD

E-mu Systems, Inc.
applied magic for the arts

11-1-1994_10:58

SHEET: 2 | DATE: | DRAWN BY DBF

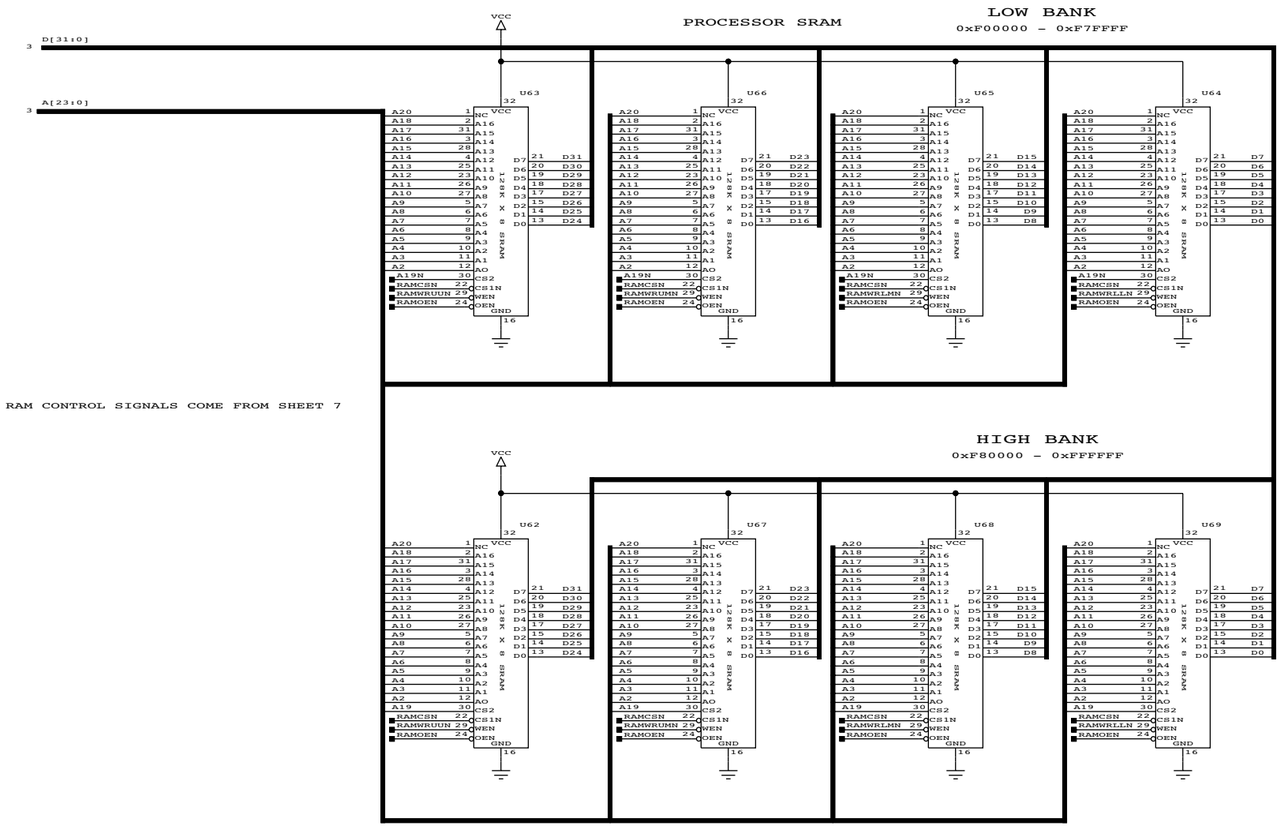

MICROPROCESSOR RAM DUAL FOOTPRINTS

22

SCHEMATIC PC500
SK500 REV A

E-mu Systems, Inc.
applied magic for the arts

4-25-1995_15:54

SHEET: 22 | DATE: | DRAWN BY DBF

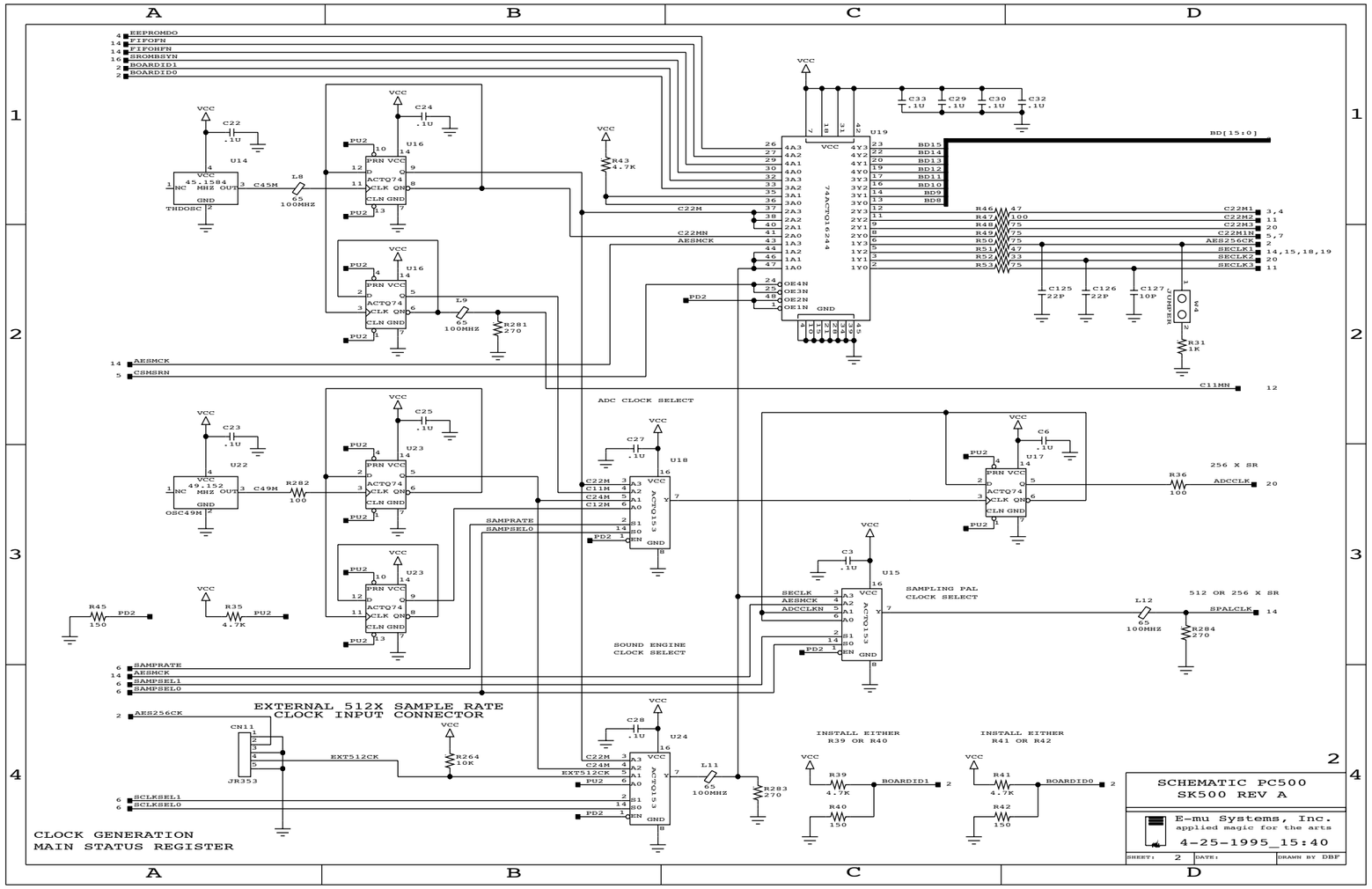
EEPROMDO
FIFOPN
FIFOHFN
SROMBSYN
BOARDID1
BOARDID0
U14
45.1584 MHZ
THDOSC
C45M
L8
65 100MHZ
U16
ACTQ74
U19
74ACTQ16244
BD[15:0]
C22M
C22MN
AESMCK
PD2
L9
R281 270
R43 4.7K
R46 47
R47 100
R48 75
R49 75
R50 75
R51 47
R52 33
R53 75
C22M1
C22M2
C22M3
C22M1N
AES256CK
SECLK1
SECLK2
SECLK3
C125 22P
C126 22P
C127 10P
JUMPER
R31 1K
CSMSRN
C11MN
ADC CLOCK SELECT
U22
49.152 MHZ
OSC49M
C49M
R282 100
U23
U18
ACTQ153
SAMPRATE
SAMPSEL0
U17
256 X SR
R36 100
ADCCLK
R45 150
R35 4.7K
U15
SAMPLING PAL CLOCK SELECT
SECLK
AESMCK
ADCCLKN
512 OR 256 X SR
L12
SPALCLK
R284 270
SOUND ENGINE CLOCK SELECT
SAMPRATE
AESMCK
SAMPSEL1
SAMPSEL0
EXTERNAL 512X SAMPLE RATE CLOCK INPUT CONNECTOR
AES256CK
CN11
JR353
EXT512CK
R264 10K
U24
L11
65 100MHZ
R283 270
SCLKSEL1
SCLKSEL0
INSTALL EITHER R39 OR R40
R39 4.7K
R40 150
BOARDID1
INSTALL EITHER R41 OR R42
R41 4.7K
R42 150
BOARDID0
CLOCK GENERATION
MAIN STATUS REGISTER
SCHEMATIC PC500
SK500 REV A
E-mu Systems, Inc.
applied magic for the arts
4-25-1995_15:40
SHEET: 2
DATE:
DRAWN BY DBF

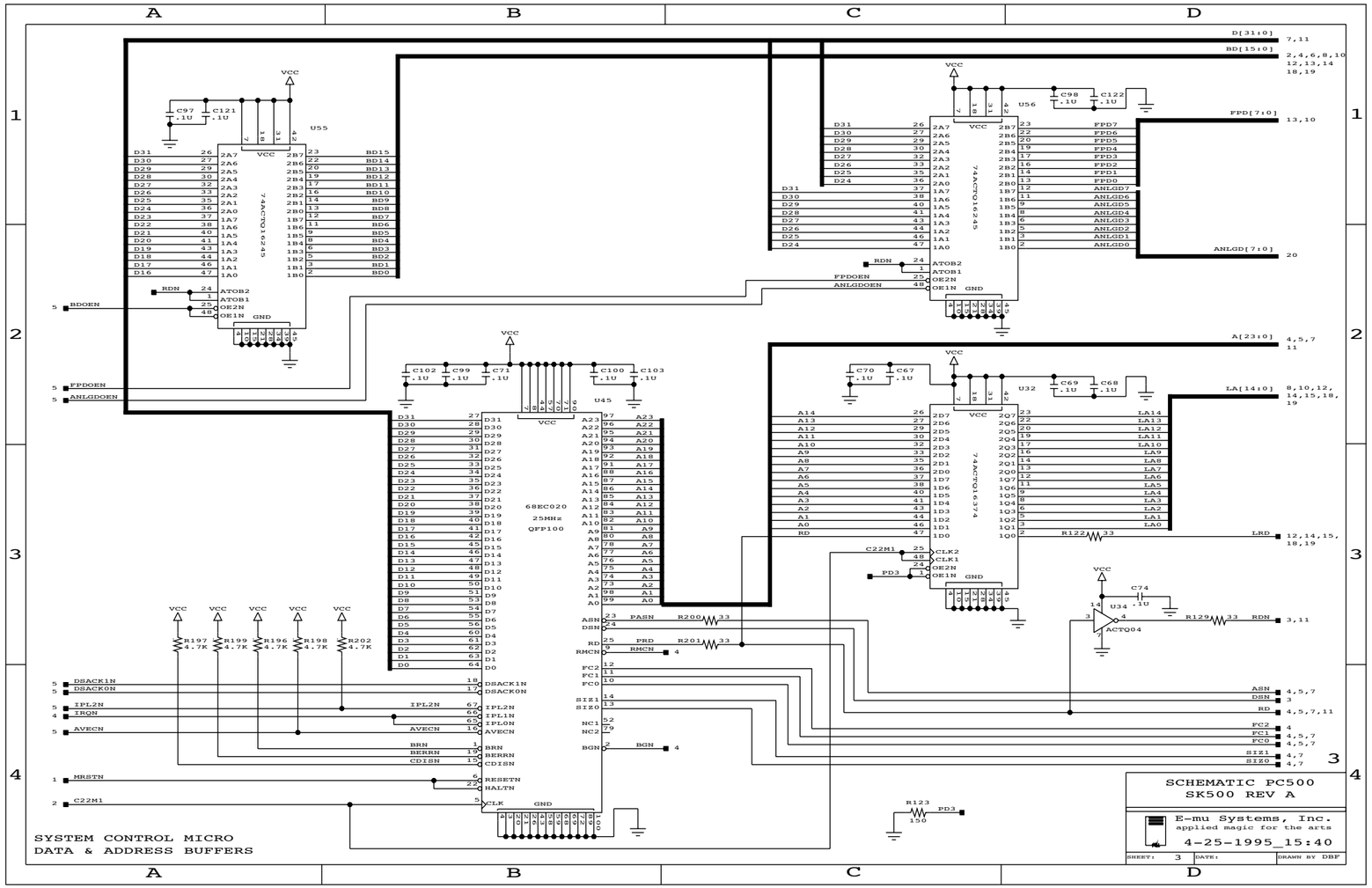
SCHEMATIC PC500
SK500 REV A
E-mu Systems, Inc.
applied magic for the arts
4-25-1995_15:40
SHEET: 3
DATE:
DRAWN BY DBF
SYSTEM CONTROL MICRO
DATA & ADDRESS BUFFERS
74ACTQ16245
74ACTQ16374
68EC020
25MHz
QFP100
ACTQ04
D[31:0]
BD[15:0]
FPD[7:0]
ANLGD[7:0]
A[23:0]
LA[14:0]
BDOEN
FPDOEN
ANLGDOEN
RDN
LRD
ASN
DSN
RD
FC2
FC1
FC0
SIZ1
SIZ0
DSACK1N
DSACK0N
IPL2N
IRQN
AVECN
MRSTN
C22M1
PD3
RMCN
BGN
PASN
PRD

"MONCONN IS DEAD, JIM"

INTERRUPT CONTROLLER, SYSTEM TIMERS

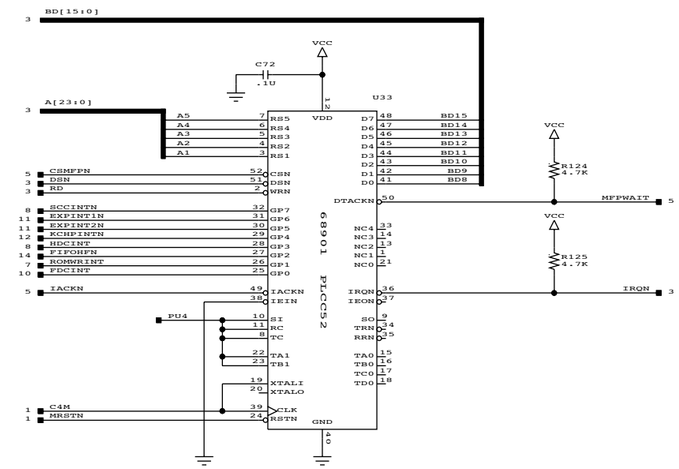

EEPROM

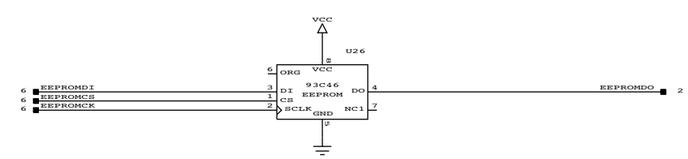

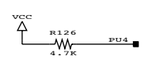

MICROPROCESSOR BREAKOUT CONNECTORS
INTERRUPT CONTROLLER, TIMERS, EEPROM

SCHEMATIC PC500
SK500 REV A

E-mu Systems, Inc.
applied magic for the arts

4-25-1995_15:43

SHEET: 4 | DATE: | DRAWN BY DBF

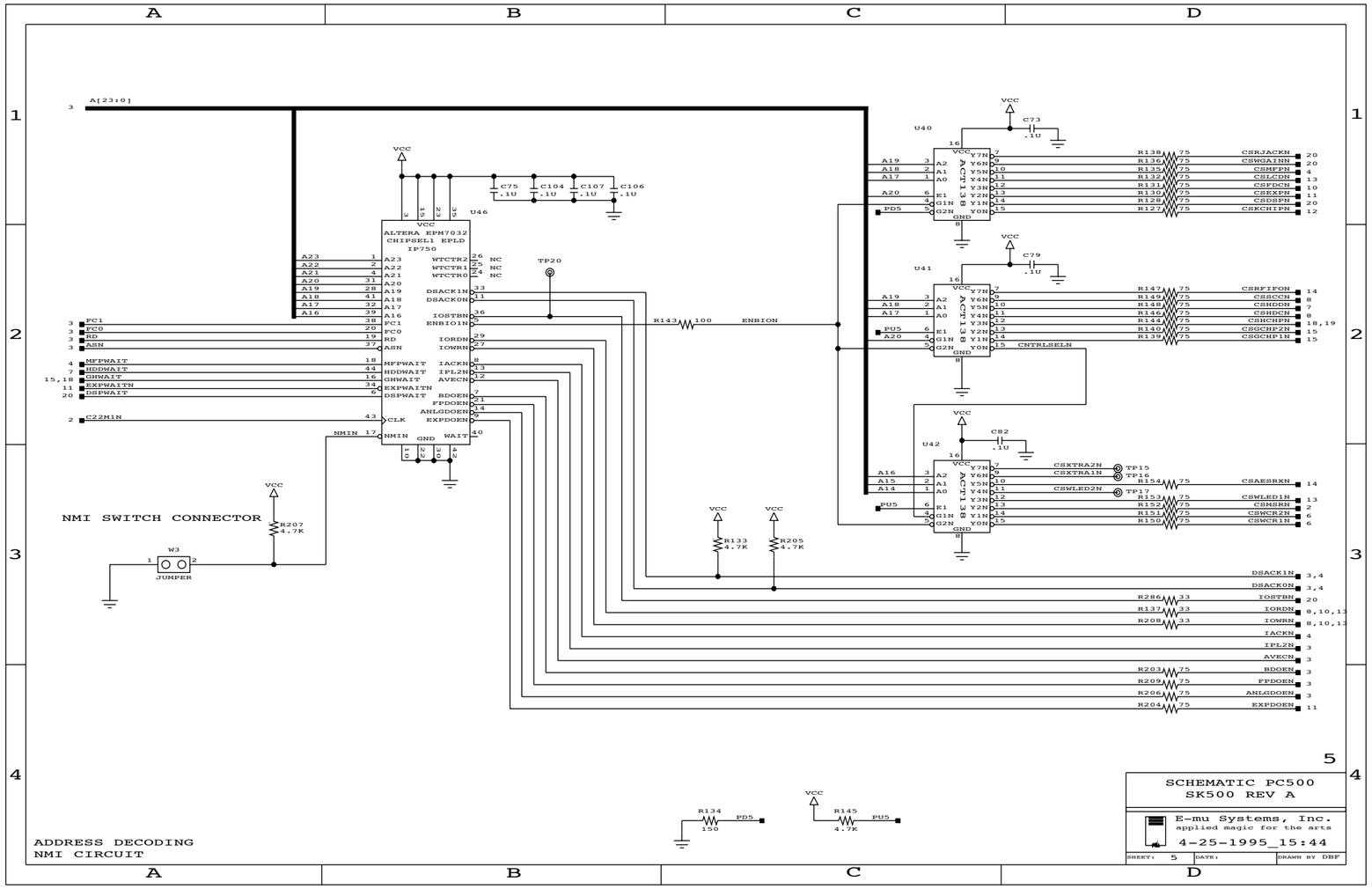
A[23:0]
U46
ALTERA EPM7032
CHIPSEL1 EPLD
IP750
U40
U41
U42
NMI SWITCH CONNECTOR
W3
JUMPER
R207 4.7K
R133 4.7K
R205 4.7K
R143 100
ENBION
CNTRLSELN
TP20
TP15
TP16
TP17
CSXTRA2N
CSXTRA1N
CSWLED2N
CSRJACKN
CSWGAINN
CSMFPN
CSLCDN
CSFDCN
CSEXPN
CSDSPN
CSKCHIPN
CSRFIFON
CSSCCN
CSHDDN
CSHCHPN
CSGCHP2N
CSGCHP1N
CSAESRXN
CSWLED1N
CSMSBN
CSWCR2N
CSWCR1N
DSACK1N
DSACKON
IOSTBN
IORDN
IOWRN
IACKN
IPL2N
AVECN
BDOEN
FPDOEN
ANLGDOEN
EXPDOEN
R134 150
R145 4.7K
ADDRESS DECODING
NMI CIRCUIT
SCHEMATIC PC500
SK500 REV A
E-mu Systems, Inc.
applied magic for the arts
4-25-1995_15:44
SHEET: 5
DATE:
DRAWN BY DBF

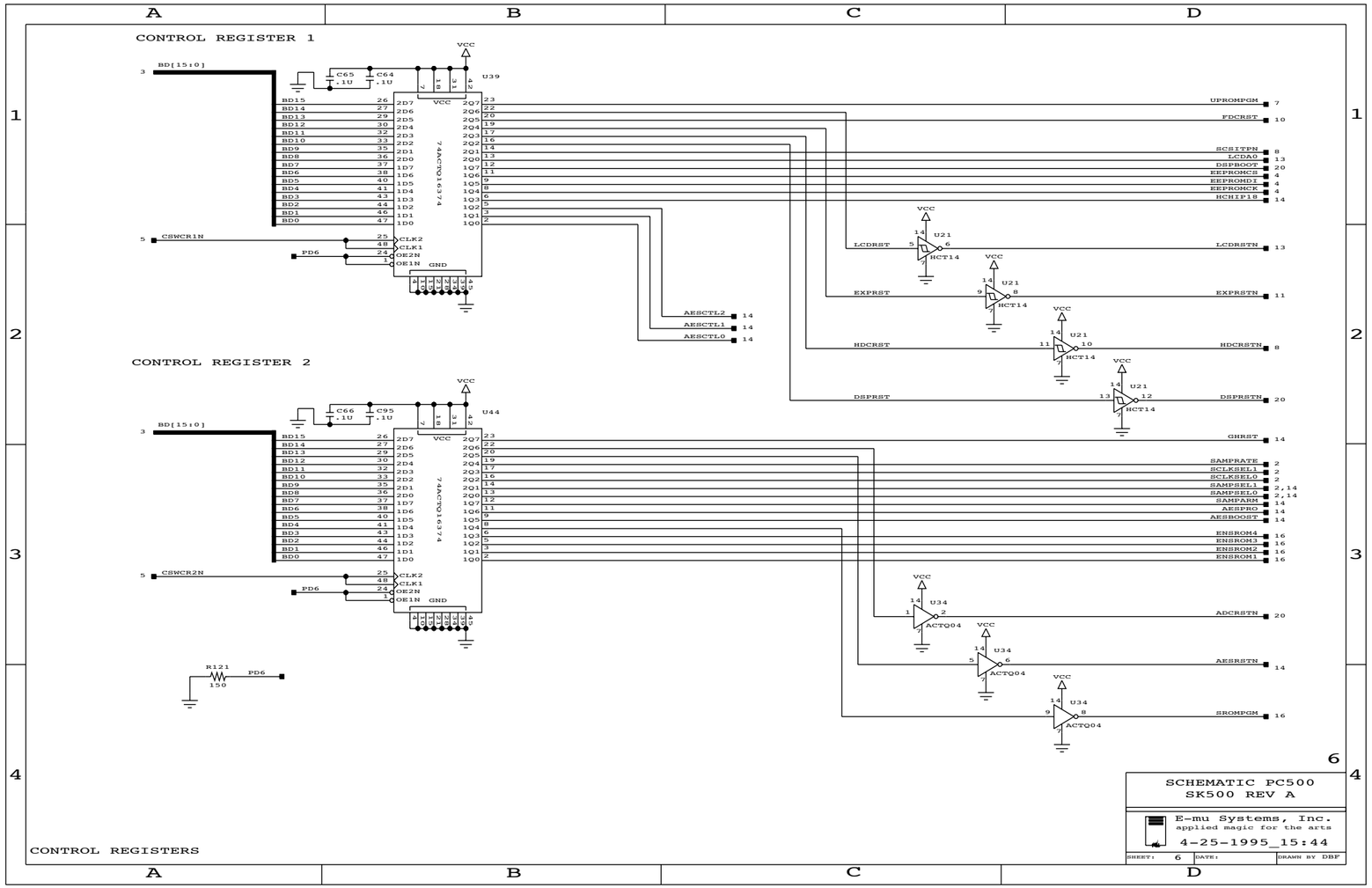

SCHEMATIC PC500
SK500 REV A

E-mu Systems, Inc.
applied magic for the arts

4-25-1995_15:44

SHEET: 6 DATE: DRAWN BY DBF

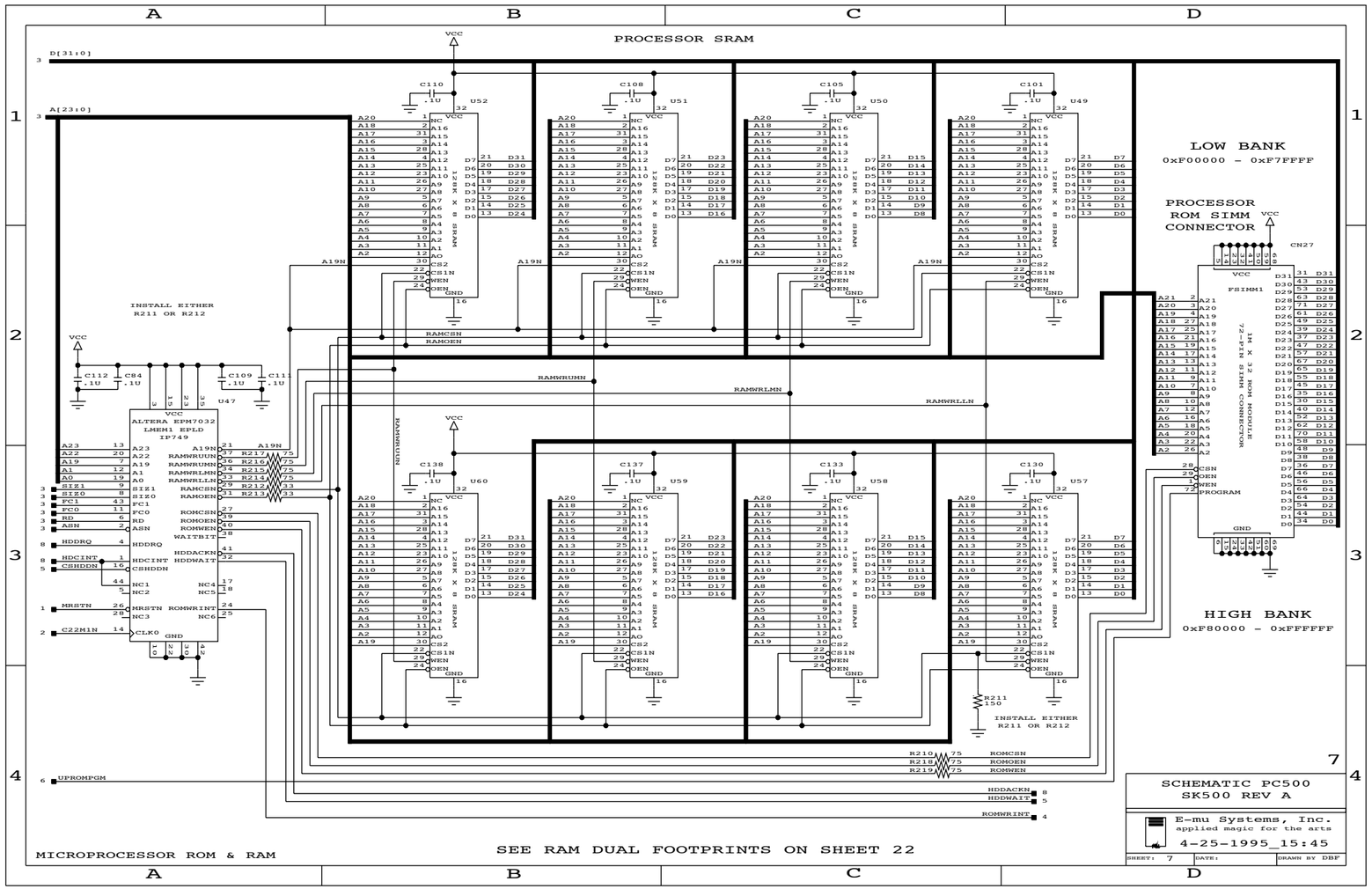
PROCESSOR SRAM
D[31:0]
A[23:0]
U52
U51
U50
U49
U60
U59
U58
U57
128K X 8 SRAM
LOW BANK
0xF00000 - 0xF7FFFF
PROCESSOR ROM SIMM CONNECTOR
CN27
FSIMM1
72-PIN SIMM CONNECTOR
1M X 32 ROM MODULE
HIGH BANK
0xF80000 - 0xFFFFFF
INSTALL EITHER R211 OR R212
ALTERA EPM7032 LMRM1 EPLD IP749
U47
RAMCSN
RAMOEN
RAMWRUMN
RAMWRLMN
RAMWRLLN
ROMCSN
ROMOEN
ROMWEN
HDDACKN
HDDWAIT
ROMWRINT
UPROMPGM
MICROPROCESSOR ROM & RAM
SEE RAM DUAL FOOTPRINTS ON SHEET 22
SCHEMATIC PC500
SK500 REV A
E-mu Systems, Inc.
applied magic for the arts
4-25-1995_15:45
SHEET: 7
DATE:
DRAWN BY DBF

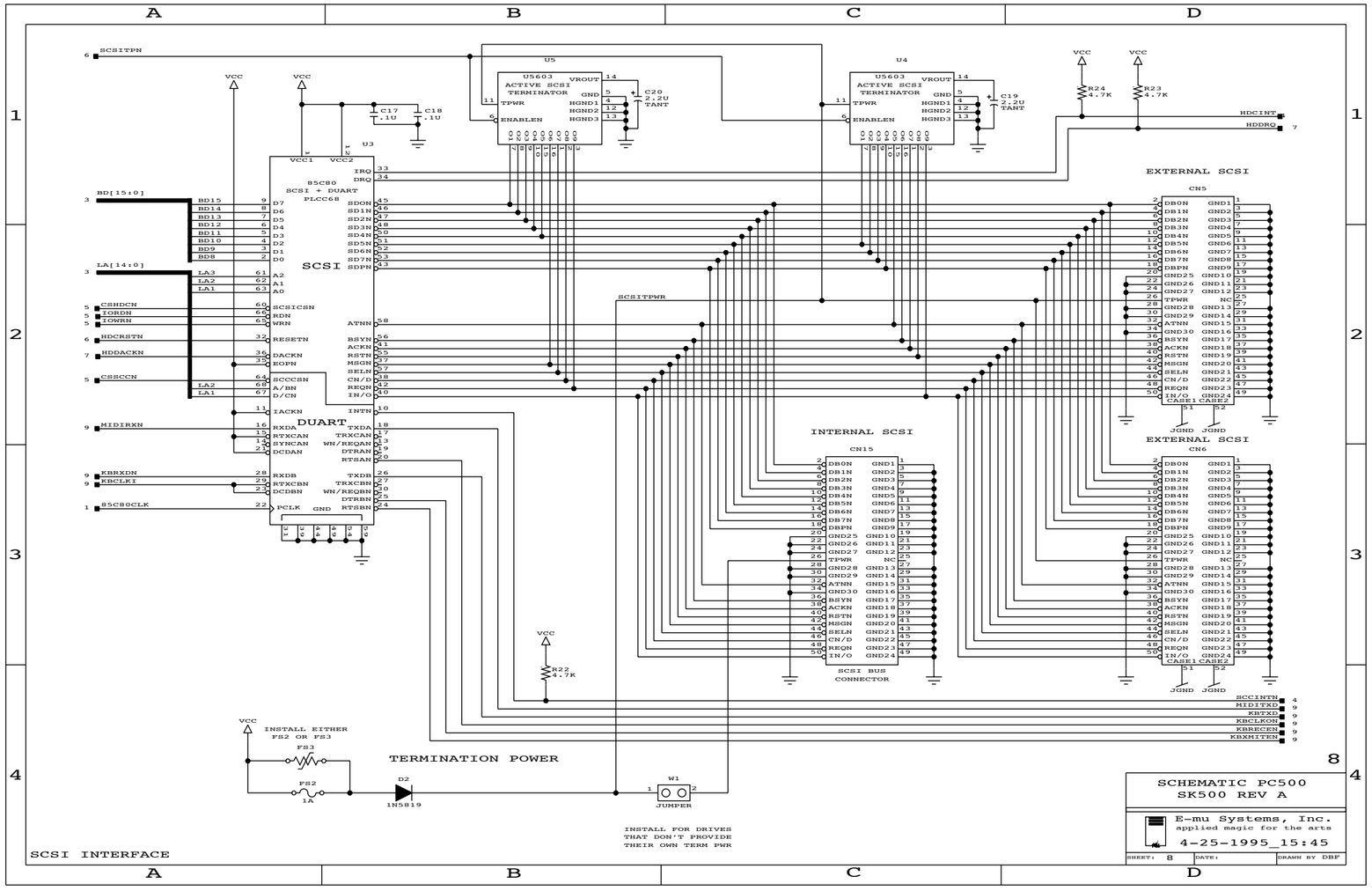
SCSITPN
U5
U5603
ACTIVE SCSI
TERMINATOR
VROUT
GND
TPWR
ENABLEN
HGND1
HGND2
HGND3
C20
2.2U
TANT
U4
C19
2.2U
TANT
VCC
R24
4.7K
R23
4.7K
HDCINT
HDDRQ
C17
.1U
C18
.1U
U3
VCC1
VCC2
IRQ
DRQ
85C80
SCSI + DUART
PLCC68
SCSI
DUART
BD[15:0]
LA[14:0]
CSHDCN
IORDN
IOWRN
HDCRSTN
HDDACKN
CSSCCN
MIDIRXN
KBRXDN
KBCLKI
85C80CLK
SCSITPWR
EXTERNAL SCSI
CN5
INTERNAL SCSI
CN15
SCSI BUS
CONNECTOR
EXTERNAL SCSI
CN6
JGND
CASE1
CASE2
R22
4.7K
SCCINTN
MIDITXD
KBTXD
KBCLKON
KBRECEN
KBXMITEN
INSTALL EITHER
FS2 OR FS3
FS3
FS2
1A
D2
1N5819
TERMINATION POWER
W1
JUMPER
INSTALL FOR DRIVES
THAT DON'T PROVIDE
THEIR OWN TERM PWR
SCHEMATIC PC500
SK500 REV A
E-mu Systems, Inc.
applied magic for the arts
4-25-1995_15:45
SHEET: 8
DATE:
DRAWN BY DBF
SCSI INTERFACE

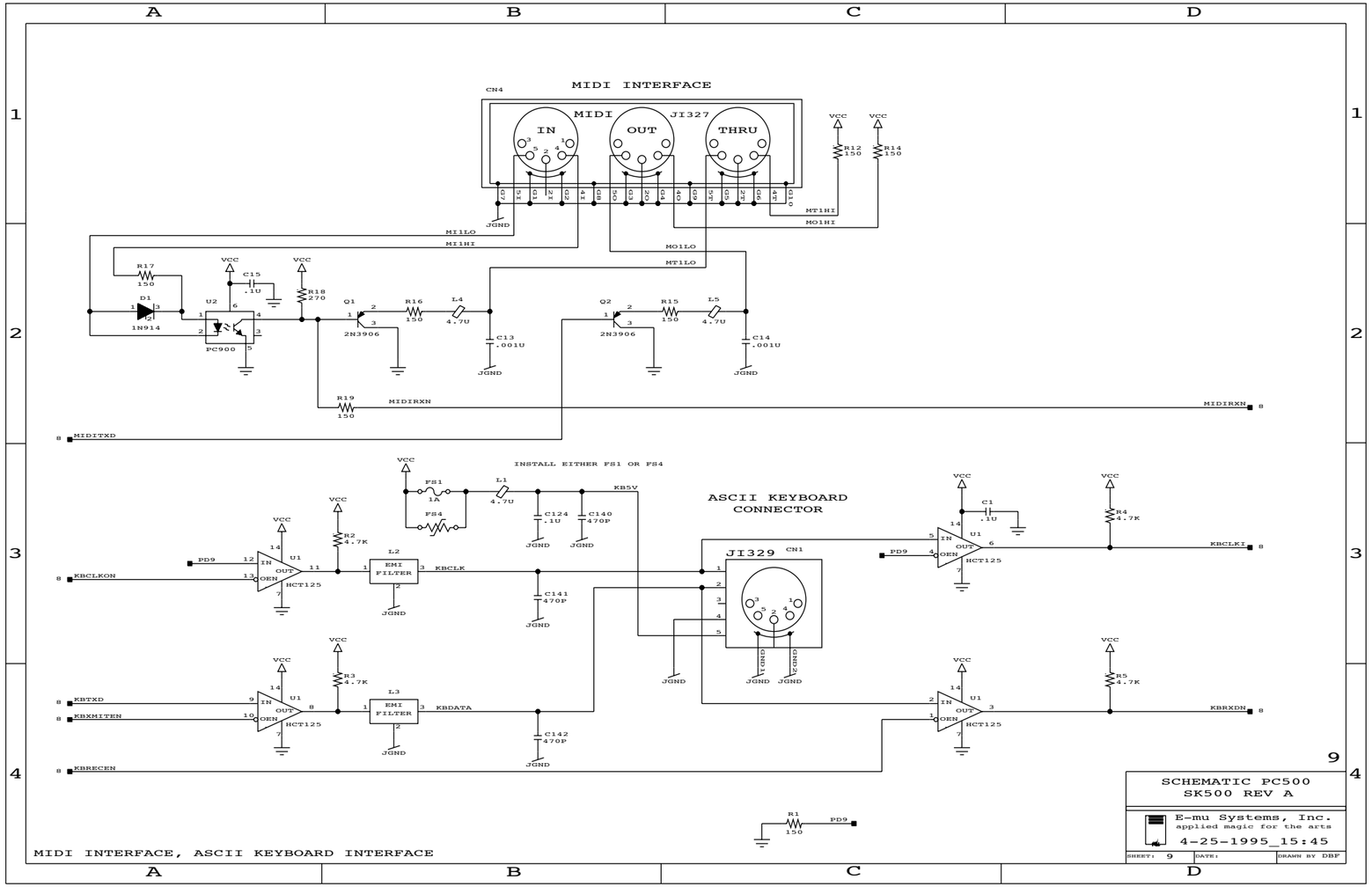
MIDI INTERFACE
CN4
MIDI
JI327
IN
OUT
THRU
VCC
R12 150
R14 150
MT1HI
MO1HI
MI1LO
MI1HI
MO1LO
MT1LO
JGND
R17 150
C15 .1U
R18 270
D1 1N914
U2 PC900
Q1 2N3906
R16 150
L4 4.7U
C13 .001U
Q2 2N3906
R15 150
L5 4.7U
C14 .001U
R19 150
MIDIRXN
MIDITXD
INSTALL EITHER FS1 OR FS4
FS1 1A
FS4
L1 4.7U
C124 .1U
C140 470P
KB5V
ASCII KEYBOARD CONNECTOR
JI329
CN1
GND1
GND2
C1 .1U
R4 4.7K
KBCLKI
PD9
U1 HCT125
R2 4.7K
L2 EMI FILTER
KBCLK
C141 470P
KBCLKON
R3 4.7K
L3 EMI FILTER
KBDATA
C142 470P
KBTXD
KBXMITTEN
KBRECEN
R5 4.7K
KBRXDN
R1 150
SCHEMATIC PC500
SK500 REV A
E-mu Systems, Inc.
applied magic for the arts
4-25-1995_15:45
SHEET: 9
DATE:
DRAWN BY DBF
MIDI INTERFACE, ASCII KEYBOARD INTERFACE

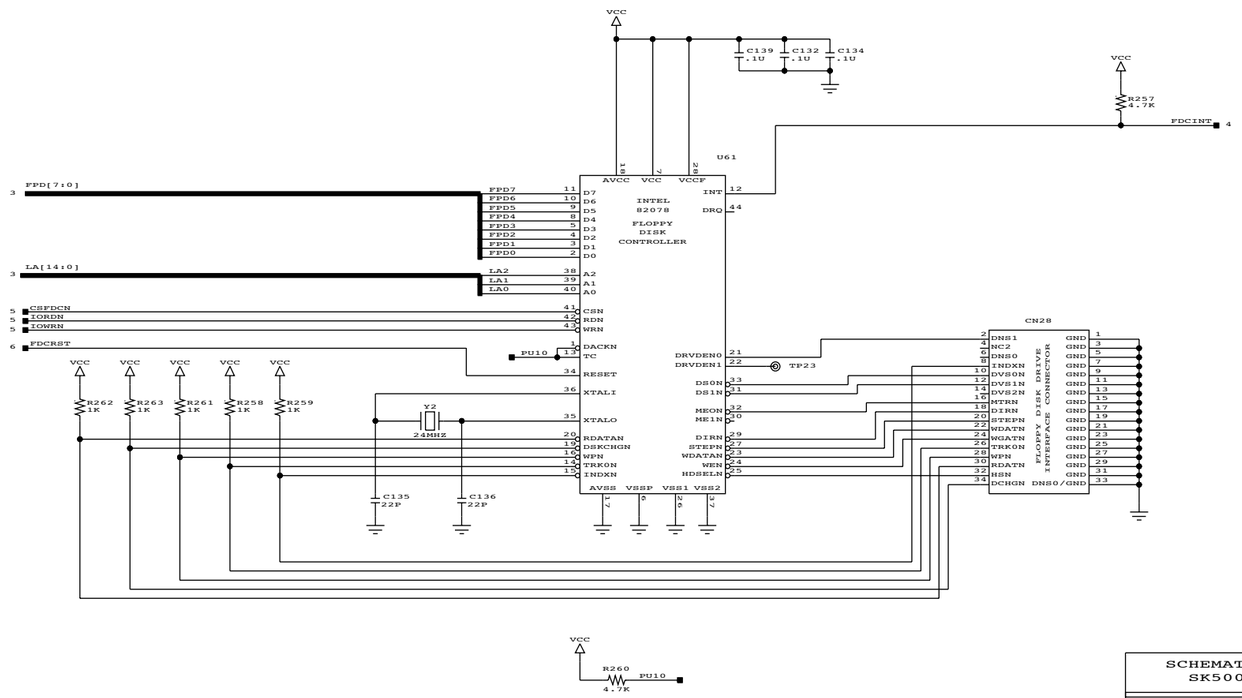

10

SCHEMATIC PC500
SK500 REV A

E-mu Systems, Inc.
applied magic for the arts

4-25-1995_15:46

SHEET: 10 DATE: DRAWN BY DBF

FLOPPY DISK DRIVE INTERFACE

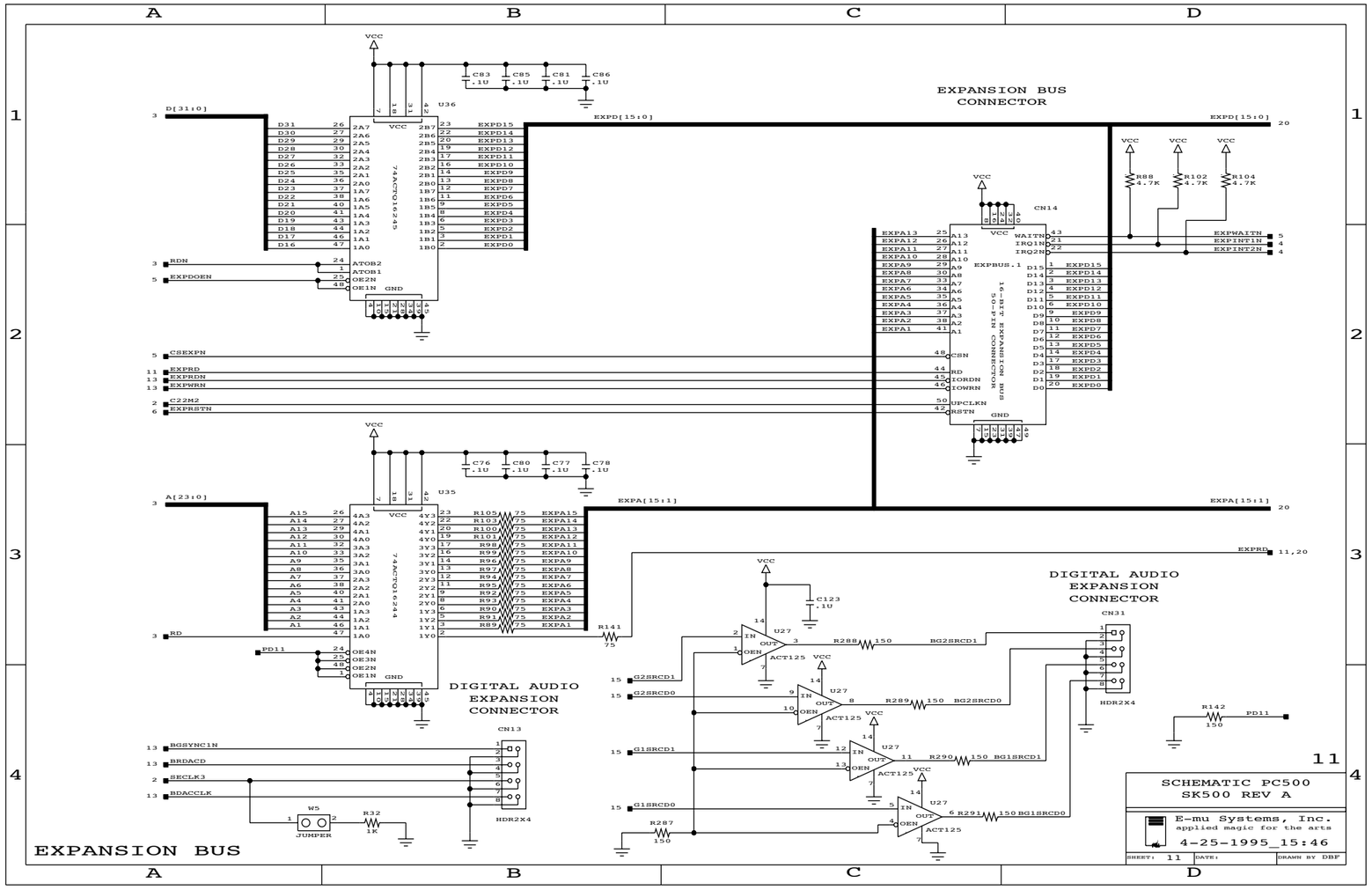
EXPANSION BUS CONNECTOR
DIGITAL AUDIO EXPANSION CONNECTOR
DIGITAL AUDIO EXPANSION CONNECTOR
EXPANSION BUS
U36
74ACTQ16245
U35
74ACTQ16244
CN14
EXPBUS.1
16-BIT EXPANSION BUS 50-PIN CONNECTOR
CN31
HDR2X4
CN13
HDR2X4
U27
ACT125
W5
JUMPER
D[31:0]
A[23:0]
EXPD[15:0]
EXPA[15:1]
VCC
GND
SCHEMATIC PC500
SK500 REV A
E-mu Systems, Inc.
applied magic for the arts
4-25-1995_15:46
SHEET: 11
DATE:
DRAWN BY DBF
11

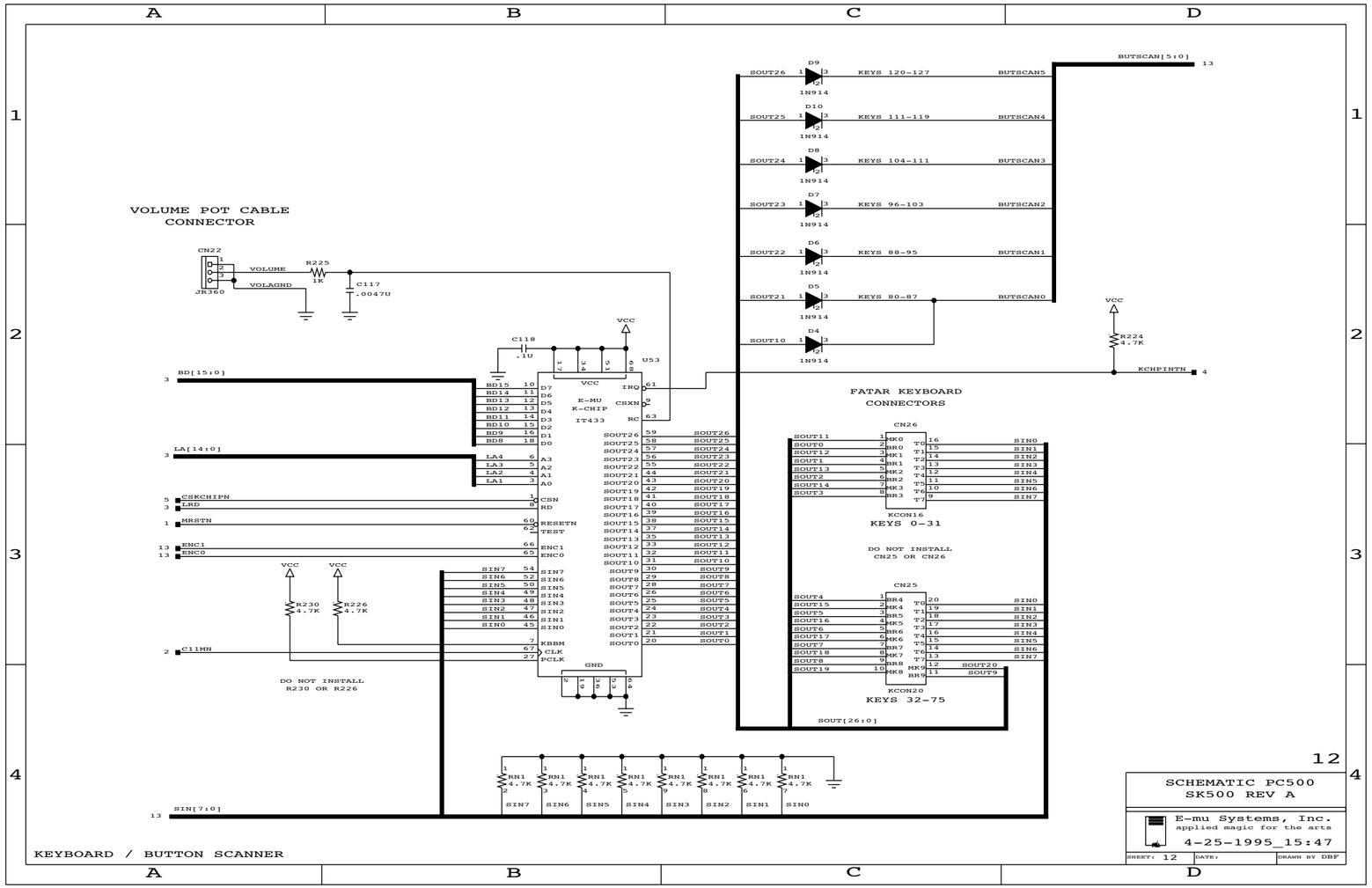

KEYBOARD / BUTTON SCANNER

12

SCHEMATIC PC500
SK500 REV A

E-mu Systems, Inc.
applied magic for the arts

4-25-1995_15:47

SHEET: 12 | DATE: | DRAWN BY DBF

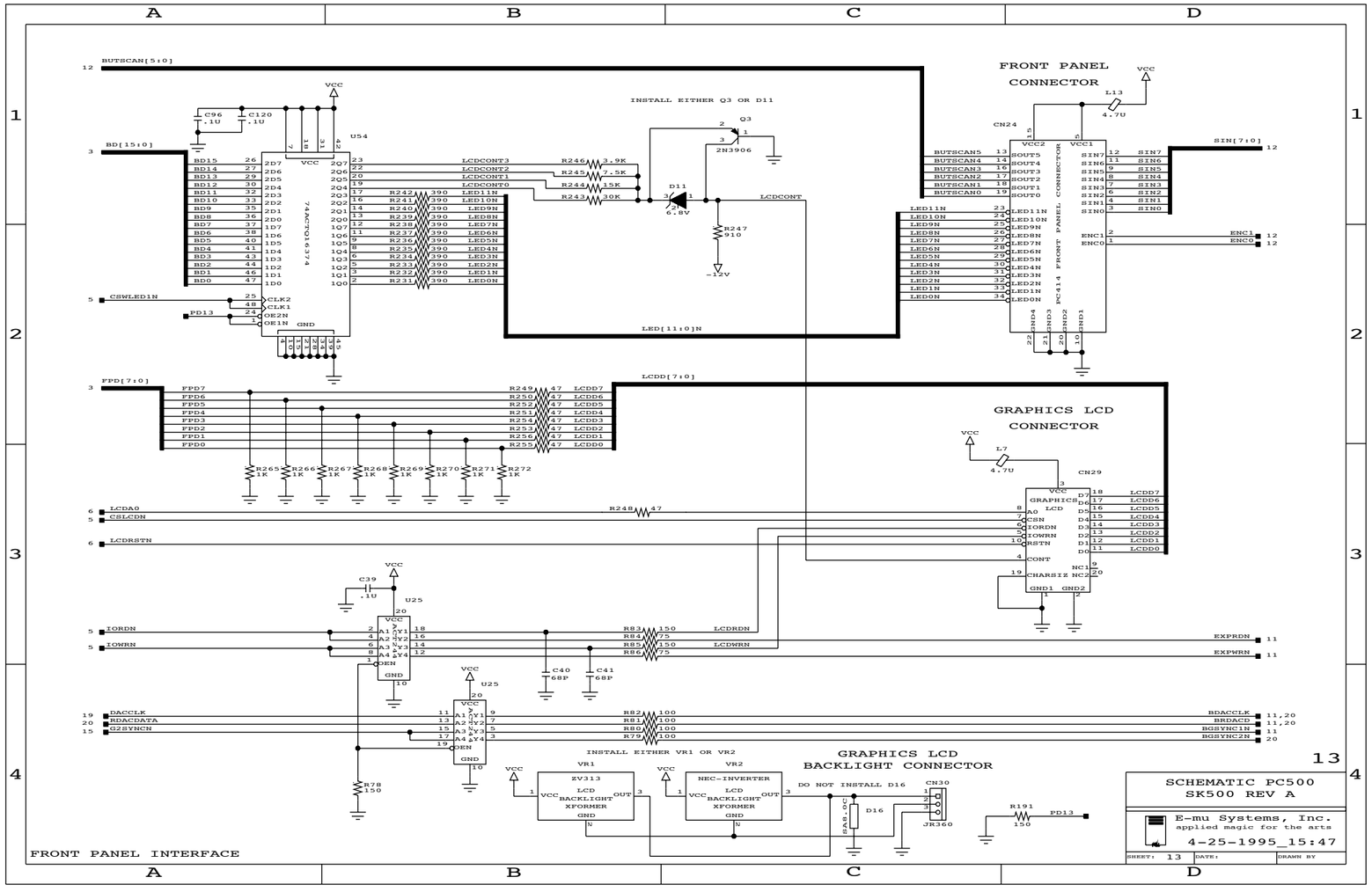
FRONT PANEL CONNECTOR
CN24
PC414 FRONT PANEL CONNECTOR
INSTALL EITHER Q3 OR D11
Q3
2N3906
D11
6.8V
R247
910
-12V
LCDCONT
U54
74ACTQ16374
BUTSCAN[5:0]
BD[15:0]
CSWLED1N
PD13
LED[11:0]N
SIN[7:0]
ENC1
ENC0
L13
4.7U
VCC
GRAPHICS LCD CONNECTOR
CN29
GRAPHICS LCD
L7
4.7U
LCDD[7:0]
FPD[7:0]
LCDA0
CSLCDN
LCDRSTN
IORDN
IOWRN
EXPRDN
EXPWRN
U25
DACCLK
RDACDATA
D2SYNCN
BDACCLK
BRDACD
BGSYNC1N
BGSYNC2N
INSTALL EITHER VR1 OR VR2
GRAPHICS LCD BACKLIGHT CONNECTOR
VR1
ZV313
LCD BACKLIGHT XFORMER
VR2
NEC-INVERTER
DO NOT INSTALL D16
D16
CN30
JR360
R191
150
R78
150
FRONT PANEL INTERFACE
SCHEMATIC PC500
SK500 REV A
E-mu Systems, Inc.
applied magic for the arts
4-25-1995_15:47
SHEET: 13
DATE:
DRAWN BY

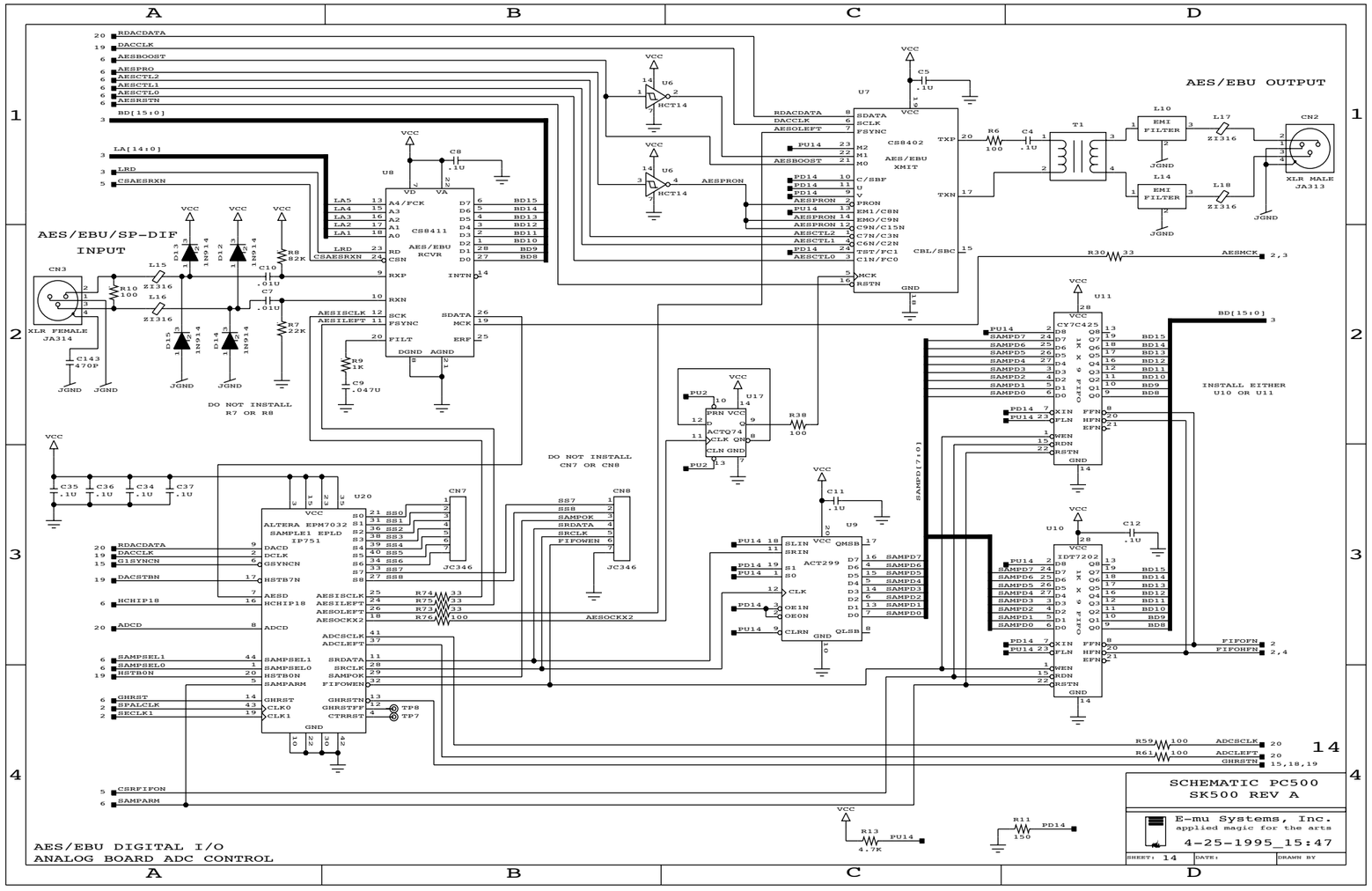
AES/EBU OUTPUT
AES/EBU/SP-DIF INPUT
AES/EBU DIGITAL I/O
ANALOG BOARD ADC CONTROL
CS8411 AES/EBU RCVR
CS8402 AES/EBU XMIT
ALTERA EPM7032 SAMPLE1 EPLD IP751
CY7C425
IDT7202
ACT74
ACT299
INSTALL EITHER U10 OR U11
DO NOT INSTALL R7 OR R8
DO NOT INSTALL CN7 OR CN8
XLR FEMALE JA314
XLR MALE JA313
SCHEMATIC PC500
SK500 REV A
E-mu Systems, Inc.
applied magic for the arts
4-25-1995_15:47
SHEET: 14
DATE:
DRAWN BY

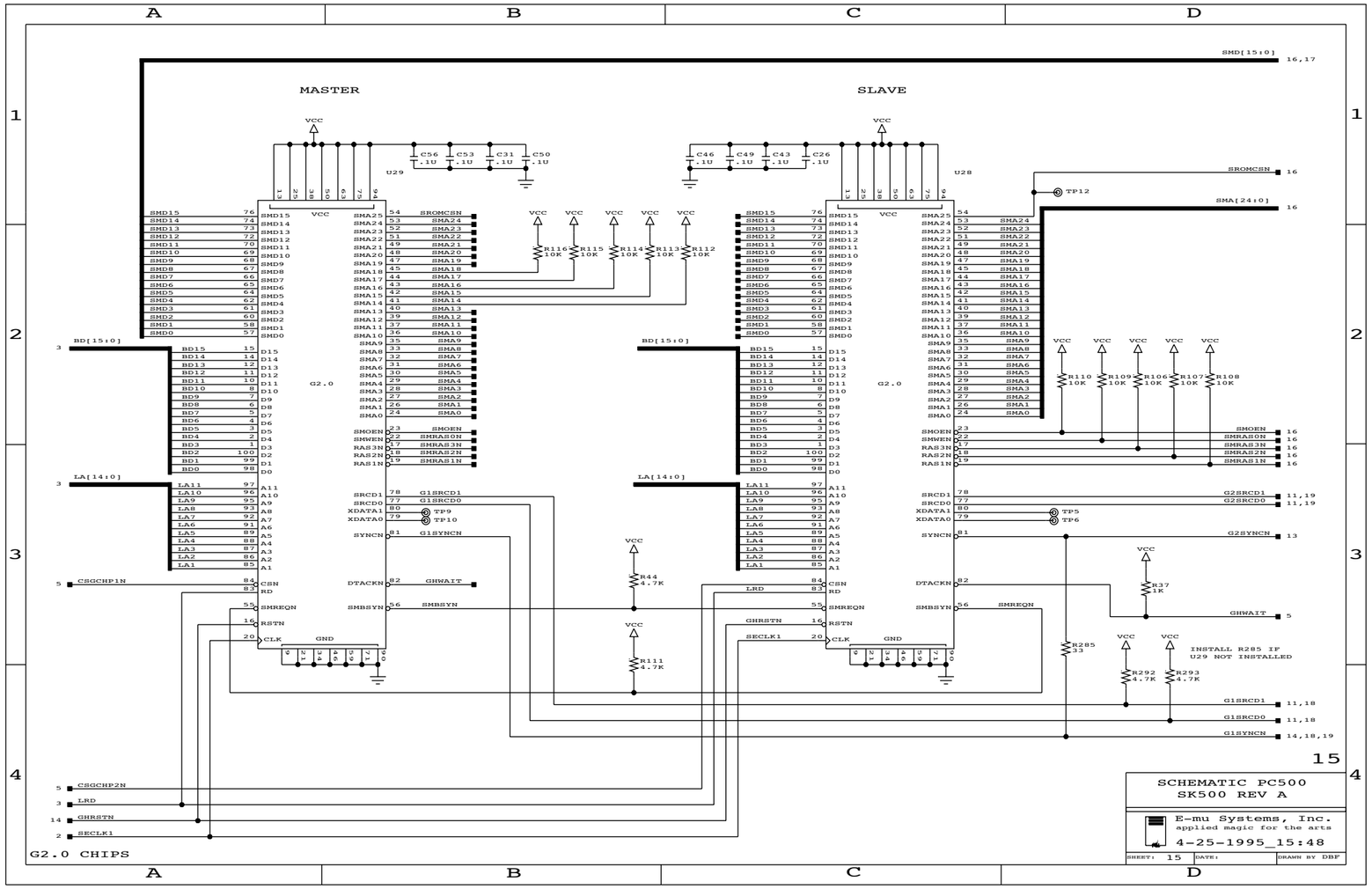
MASTER
SLAVE
U29
U28
G2.0
VCC
GND
SMD[15:0]
BD[15:0]
LA[14:0]
SMA[24:0]
SROMCSN
SMOEN
SMRAS0N
SMRAS3N
SMRAS2N
SMRAS1N
G2SRCD1
G2SRCD0
G2SYNCN
G1SRCD1
G1SRCD0
G1SYNCN
GHWAIT
SMREQN
SMBSYN
DTACKN
CSGCHP1N
CSGCHP2N
LRD
GHRSTN
SECLK1
INSTALL R285 IF
U29 NOT INSTALLED
G2.0 CHIPS
SCHEMATIC PC500
SK500 REV A
E-mu Systems, Inc.
applied magic for the arts
4-25-1995_15:48
SHEET: 15
DATE:
DRAWN BY DBF

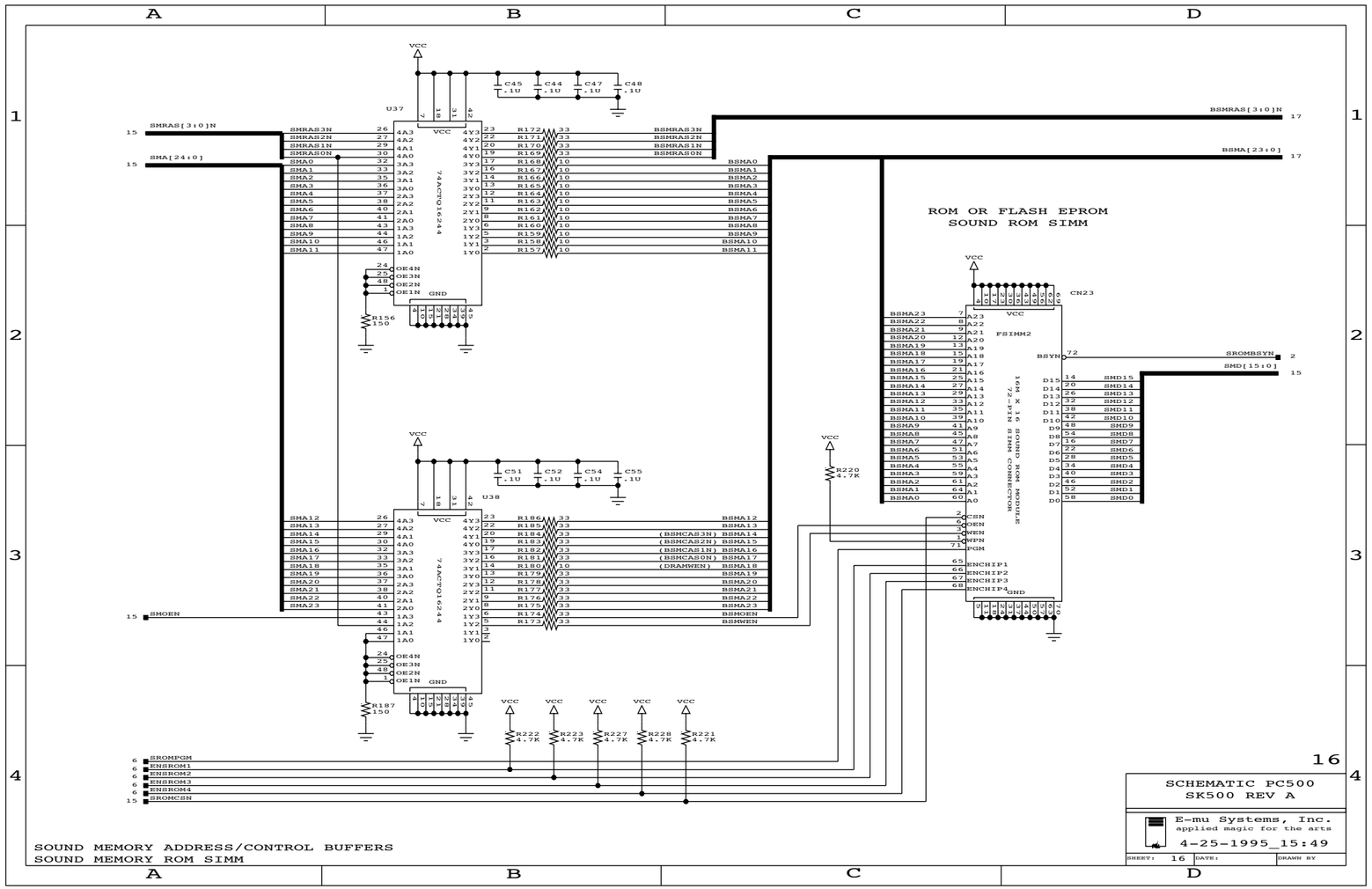

SOUND MEMORY ADDRESS/CONTROL BUFFERS
SOUND MEMORY ROM SIMM

16

SCHEMATIC PC500
SK500 REV A

E-mu Systems, Inc.
applied magic for the arts

4-25-1995_15:49

SHEET: 16 | DATE: | DRAWN BY

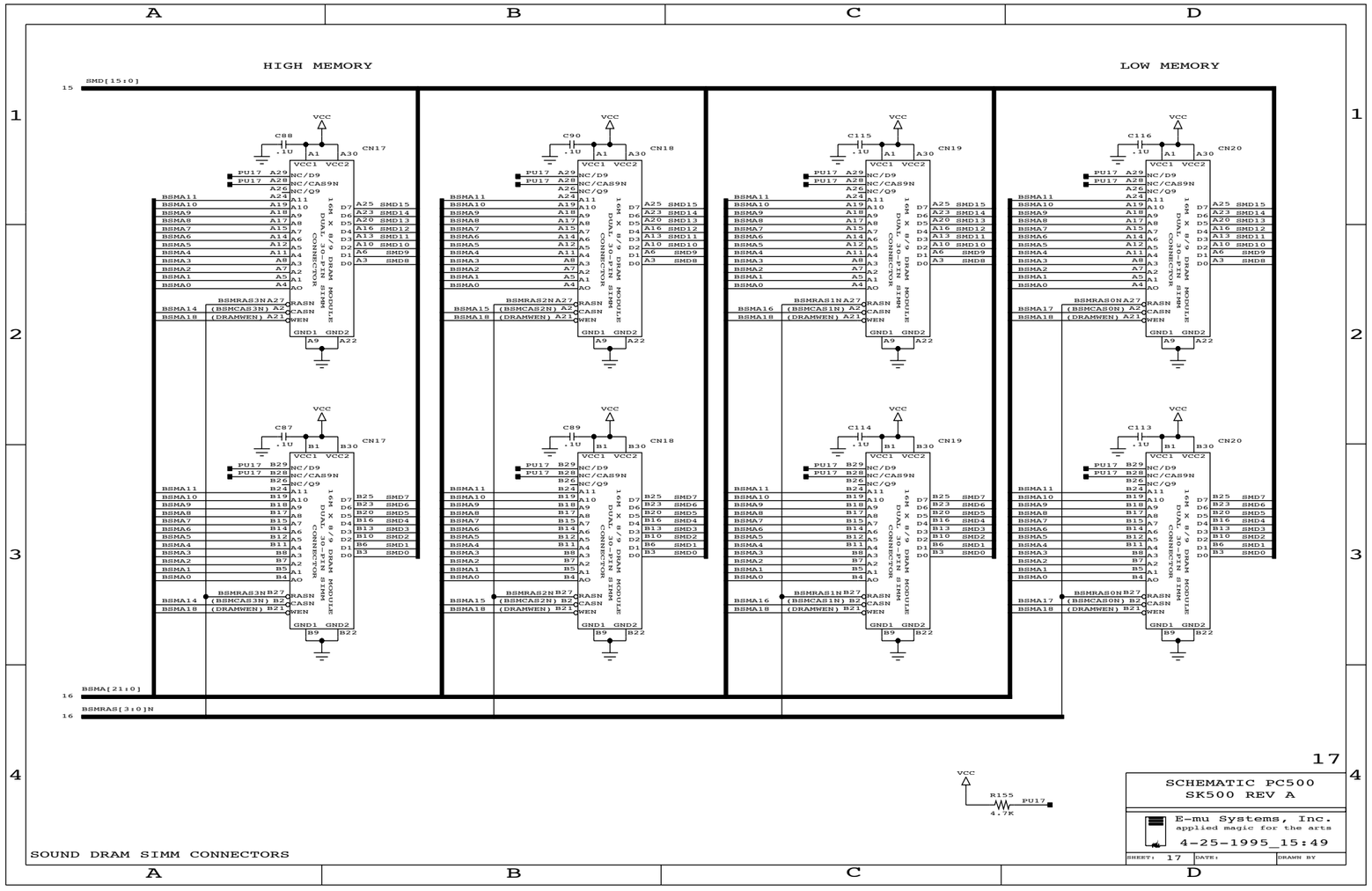

SCHEMATIC PC500
SK500 REV A

E-mu Systems, Inc.
applied magic for the arts

4-25-1995_15:49

SHEET: 17 DATE: DRAWN BY

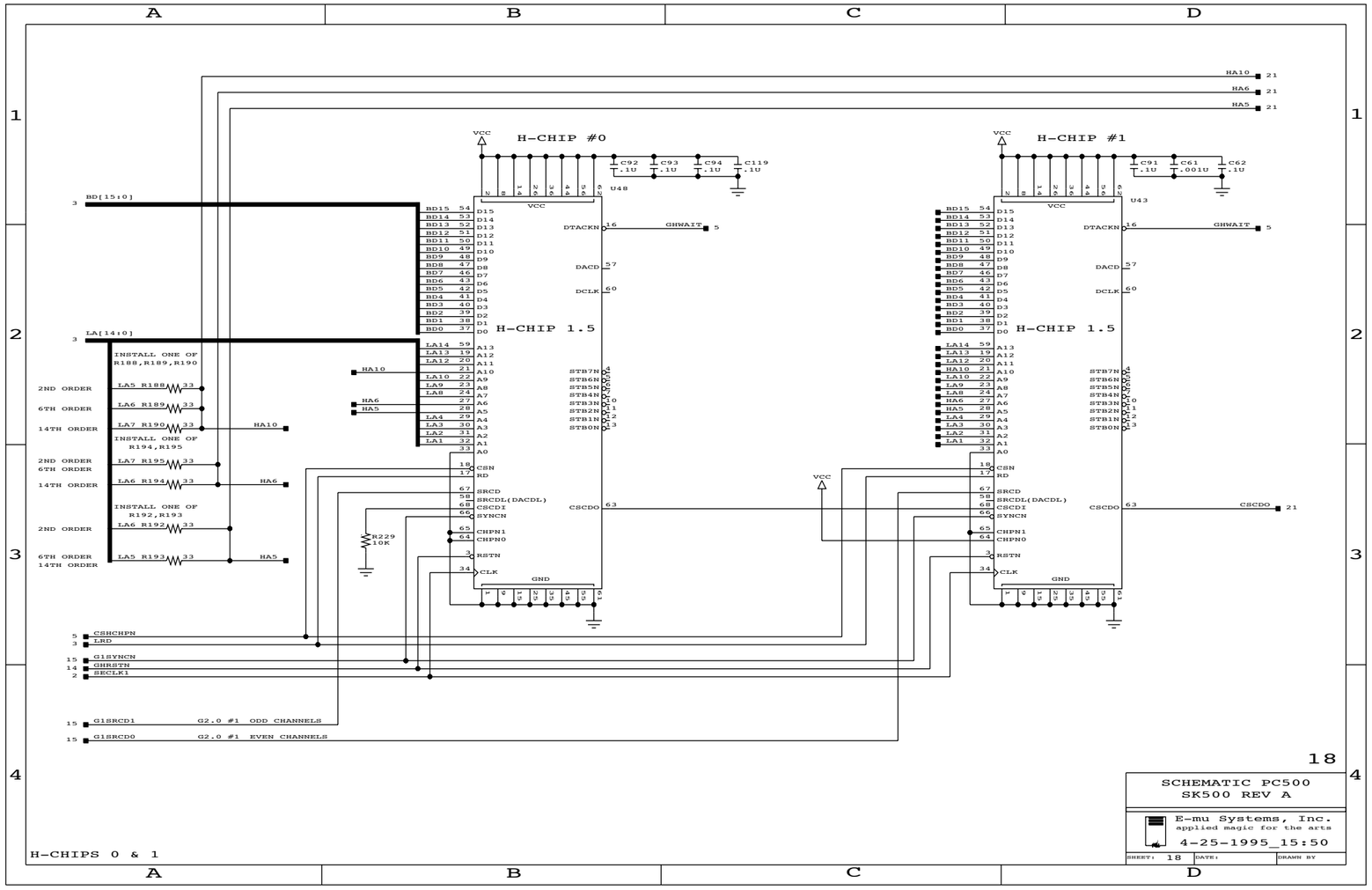

18

SCHEMATIC PC500
SK500 REV A

E-mu Systems, Inc.
applied magic for the arts

4-25-1995_15:50

SHEET: 18 DATE: DRAWN BY

H-CHIPS 0 & 1

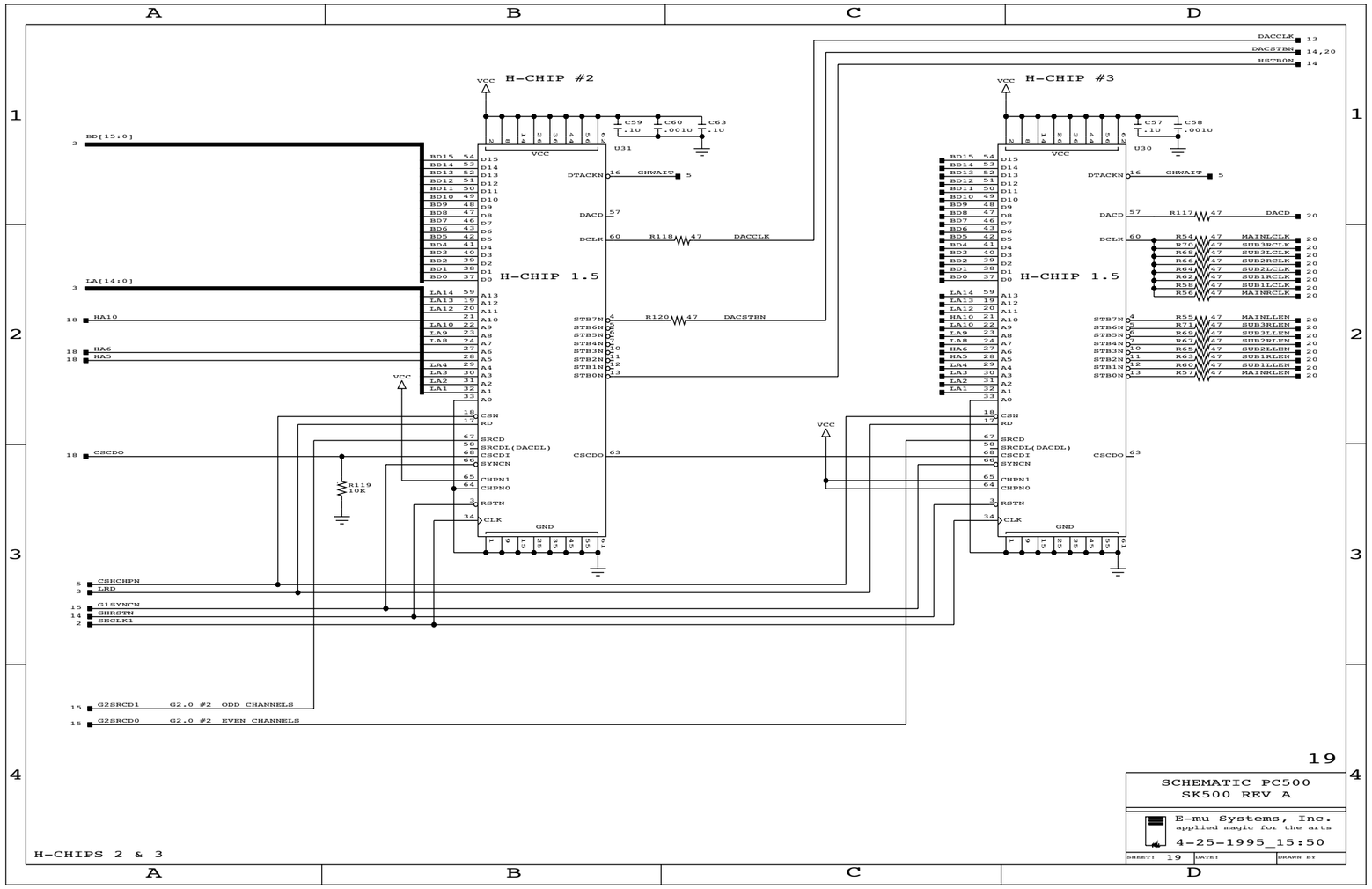

H-CHIPS 2 & 3

19

SCHEMATIC PC500
SK500 REV A

E-mu Systems, Inc.
applied magic for the arts

4-25-1995_15:50

SHEET: 19 | DATE: | DRAWN BY

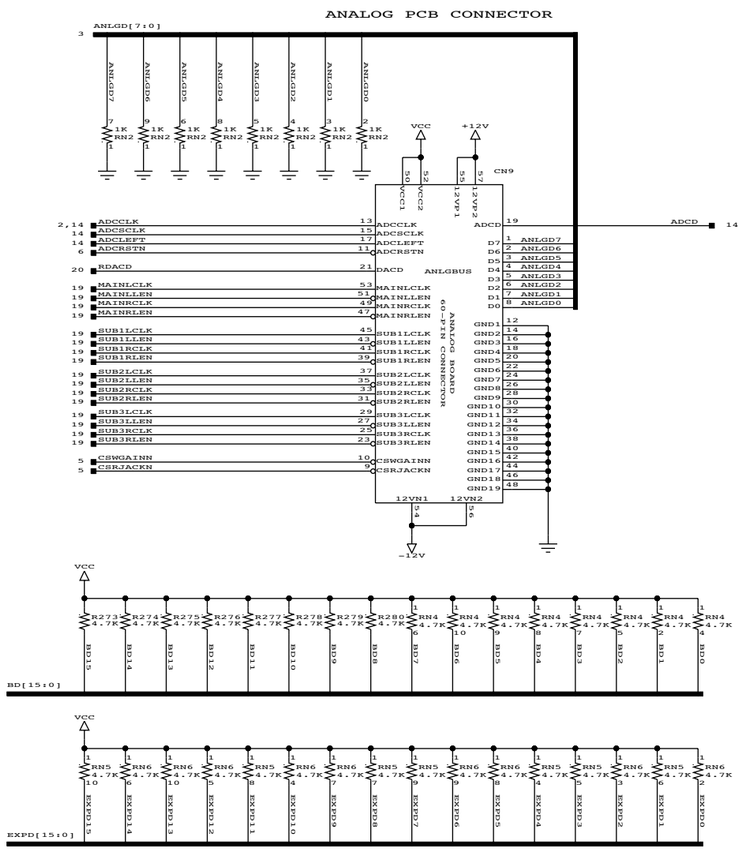

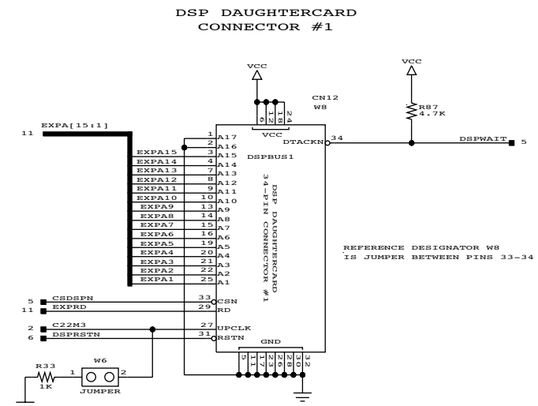

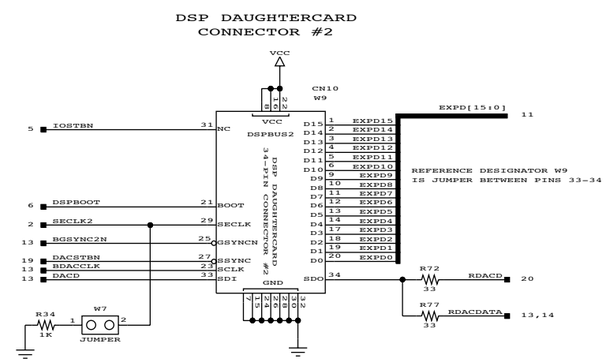

ANALOG BOARD CONNECTOR
EFFECTS BOARD CONNECTOR
DIGITAL AUDIO EXPANSION CONNECTOR
DATA BUS TERMINATIONS

20

SCHEMATIC PC500
SK500 REV A

E-mu Systems, Inc.
applied magic for the arts

4-25-1995_15:53

SHEET: 20 DATE: DRAWN BY

UNSTUFFED COMPONENTS LIST

IF A COMPONENT IS LISTED IN THESE TABLES, DON'T INSTALL
IT ON THE CIRCUIT BOARD.

SHEET 1

EMULATOR IV	e-64	NOTES
R28	R28	85C80 UART CLK SELECT

SHEET 2

EMULATOR IV	e-64	NOTES
R31	R31	FCC PULLDOWN RESISTOR
R39	R39	BOARD ID
R41		BOARD ID
	R42	BOARD ID
	R47	CLOCK LINE
	R48	CLOCK LINE
	R50	CLOCK LINE
	R52	CLOCK LINE
	R53	CLOCK LINE
C125	C125	CLOCK LINE
C126	C126	CLOCK LINE
C127	C127	CLOCK LINE
	CN11	EXT CLK INPUT CONNECTOR
W4	W4	FCC PULLDOWN RESISTOR

SHEET 3

EMULATOR IV	e-64	NOTES
		ALL COMPONENTS STUFFED

SHEET 4

EMULATOR IV	e-64	NOTES
CN21	CN21	68EC020 BREAKOUT CONNECTOR

SHEET 5

EMULATOR IV	e-64	NOTES
	R128	CHIP SELECT
	R130	CHIP SELECT
	R139	CHIP SELECT
	R204	EXP BUS XCVR OEN
	R286	IOSTBN DAMPING RESISTOR
W3	W3	NMI CONNECTOR

SHEET 6

EMULATOR IV	e-64	NOTES
		ALL COMPONENTS STUFFED

SHEET 7

EMULATOR IV	e-64	NOTES
R212	R212	RAMCSN
U62	U49	ALTERNATE STUFF SRAM
U63	U50	ALTERNATE STUFF SRAM
U64	U51	ALTERNATE STUFF SRAM
U65	U52	ALTERNATE STUFF SRAM
U66	U57	ALTERNATE STUFF SRAM
U67	U58	ALTERNATE STUFF SRAM
U68	U59	ALTERNATE STUFF SRAM
U69	U60	ALTERNATE STUFF SRAM

SHEET 8

EMULATOR IV	e-64	NOTES
FS3	FS3	SCSI ALT STUFF FUSE

SHEET 9

EMULATOR IV	e-64	NOTES
C141	C141	ASCII KB FCC CAP
C142	C142	ASCII KB FCC CAP
FS4	FS4	ASCII KEYBOARD ALT STUFF FUSE

SHEET 10

EMULATOR IV	e-64	NOTES
		ALL COMPONENTS STUFFED

SHEET 11

EMULATOR IV	e-64	NOTES
R32	R32	FCC CAP
W5	W5	FCC CAP CONN
	CN13	DIG AUDIO EXP CONN
	CN31	DIG AUDIO EXP CONN
	C76	EXP BUS BYPASS CAP
	C77	EXP BUS BYPASS CAP
	C78	EXP BUS BYPASS CAP
	C80	EXP BUS BYPASS CAP
	C81	EXP BUS BYPASS CAP
	C83	EXP BUS BYPASS CAP
	C85	EXP BUS BYPASS CAP
	C86	EXP BUS BYPASS CAP
	C123	U27 BYPASS CAP
	R89	EXP BUS DMPG RES
	R90	EXP BUS DMPG RES
	R91	EXP BUS DMPG RES
	R92	EXP BUS DMPG RES
	R93	EXP BUS DMPG RES
	R94	EXP BUS DMPG RES
	R95	EXP BUS DMPG RES
	R96	EXP BUS DMPG RES
	R97	EXP BUS DMPG RES
	R98	EXP BUS DMPG RES
	R99	EXP BUS DMPG RES
	R100	EXP BUS DMPG RES
	R101	EXP BUS DMPG RES
	R103	EXP BUS DMPG RES
	R105	EXP BUS DMPG RES
	R141	EXP BUS DMPG RES
	R142	PULL DOWN
	R287	EXP BUS DMPG RES
	R288	EXP BUS DMPG RES
	R289	EXP BUS DMPG RES
	R290	EXP BUS DMPG RES
	R291	EXP BUS DMPG RES
	U27	'ACT125 DIG AUDIO EXP DRVR
	U35	EXP BUS ADDRESS BUFF
	U36	EXP BUS DATA XCVR
	CN14	EXP BUS CONN

SHEET 12

EMULATOR IV	e-64	NOTES
CN25	CN25	FATAR KEYBOARD CONN
CN26	CN26	FATAR KEYBOARD CONN
R226	R226	K-CHIP CONFIG OPTION
R230	R230	K-CHIP CONFIG OPTION

SHEET 13

EMULATOR IV	e-64	NOTES
C40	C40	FCC CAP
C41	C41	FCC CAP
D16	D16	LCD XFORMER LOAD DIODE
Q3	Q3	ALT LCD CONTRAST CIRCUIT
VR2	VR2	ALT STUFF LCD BKLIGHT XFORMER
	R84	EXP BUS RDN
	R86	EXP BUD WRN
	R79	DIG AUDIO EXP SIGNALS
	R80	DIG AUDIO EXP SIGNALS
	R81	DIG AUDIO EXP SIGNALS
	R82	DIG AUDIO EXP SIGNALS

SHEET 14

EMULATOR IV	e-64	NOTES
CN7	CN7	SAMPLING PAL BONUS CONN
CN8	CN8	SAMPLING PAL BONUS CONN
R7	R7	AES RCVR PLL FIX
R8	R8	AES RCVR PLL FIX
U11	U11	ALT STUFF FIFO

SHEET 15

EMULATOR IV	e-64	NOTES
R285		G1SYNCN TO G2SYNCN JUMPER
	C31	G-CHIP BYPASS CAP
	C50	G-CHIP BYPASS CAP
	C53	G-CHIP BYPASS CAP
	C56	G-CHIP BYPASS CAP
	R292	PULLUP
	R293	PULLUP
	U29	G2.0 CHIP

SHEET 16

EMULATOR IV	e-64	NOTES
		ALL COMPONENTS STUFFED

SHEET 17

EMULATOR IV	e-64	NOTES
	CN19	DUAL SIMM CONNECTOR
	CN20	DUAL SIMM CONNECTOR
	C113	BYPASS CAPS
	C114	BYPASS CAPS
	C115	BYPASS CAPS
	C116	BYPASS CAPS

SHEET 18

EMULATOR IV	e-64	NOTES
R188	R188	H-CHIP ADDR SCRAMBLING
R190	R190	H-CHIP ADDR SCRAMBLING
R192	R192	H-CHIP ADDR SCRAMBLING
R194	R194	H-CHIP ADDR SCRAMBLING
	R229	PULLDOWN
	C62	BYPASS CAP
	C91	BYPASS CAP
	C92	BYPASS CAP
	C93	BYPASS CAP
	C94	BYPASS CAP
	U43	H-CHIP
	U48	H-CHIP

SHEET 19

EMULATOR IV	e-64	NOTES
		ALL COMPONENTS STUFFED

SHEET 20

EMULATOR IV	e-64	NOTES
R33	R33	FCC CLK PULLDOWN
R34	R34	FCC CLK PULLDOWN
W6	W6	FCC CLK PULLDOWN CONN
W7	W7	FCC CLK PULLDOWN CONN
	CN10	DSP EXP CONN
	CN12	DSP EXP CONN
	RN5	EXP BUS PULLUP SIP
	RN6	EXP BUS PULLUP SIP

21

SCHEMATIC PC500
SK500 REV A

E-mu Systems, Inc.
applied magic for the arts

4-25-1995_15:54

SHEET: 21 DATE: DRAWN BY

SCHEMATIC INDEX:

REVISIONS

ECO	ZONE	LTR	DESCRIPTION	DATE	APPR.
2730		A	INITIAL RELEASE	5/8/95	DBF

SPARES

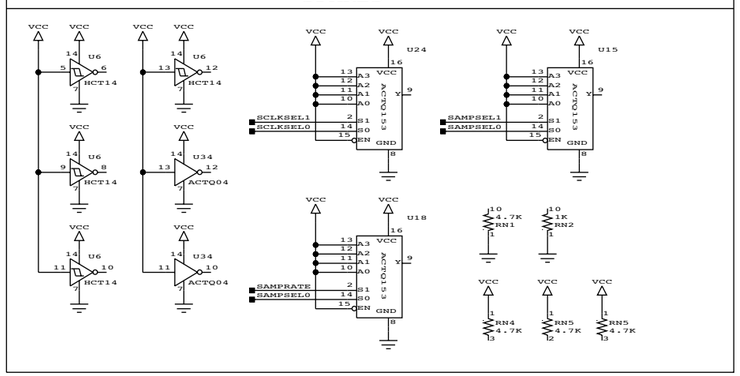

MOUNTING HOLES

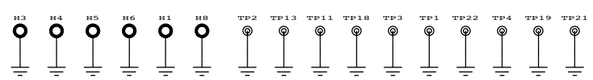

GND TEST POINTS

POWER SUPPLY CONNECTOR

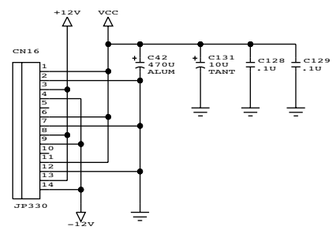

INSTALL EITHER R28 OR R29

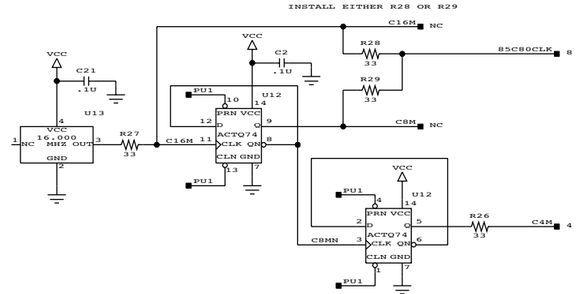

POWER-UP RESET

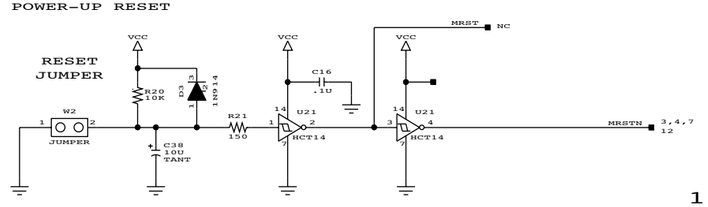

GND PLANE FOR REAR PANEL I/O CABLE SHIELD GND

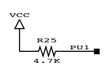

E-mu Systems, Inc.
applied magic for the arts
1600 Green Hills Road
Scotts Valley, California 95066

DRAWING TITLE: SCHEMATIC PC500 5-8-1995_9:54

SIZE	REV.	DRAWING NO.
D	A	SK500

SCALE | DATE | APPR | DRAWN BY DBF

SHEET: 1 OF 22

E-IV / e-64 DIGITAL BOARD SCHEMATICS

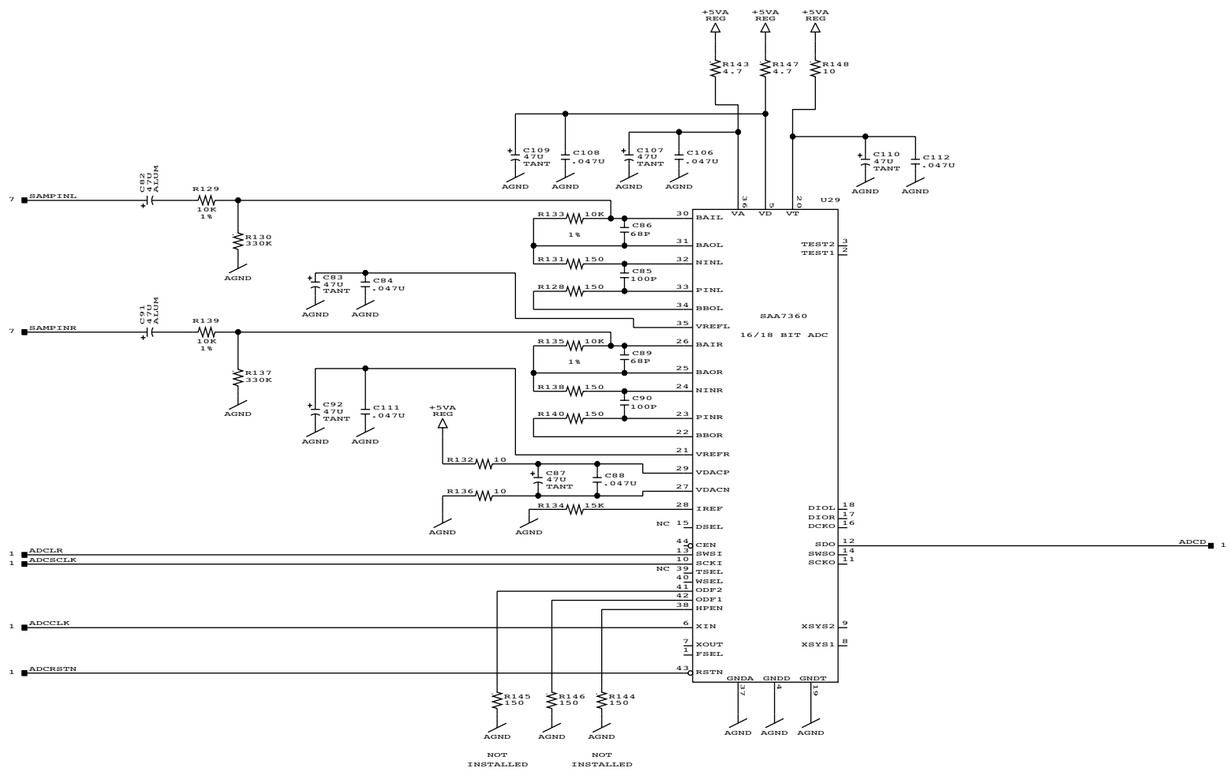

SCHEMATIC PC411 REV 2

E-mu Systems, Inc.
applied magic for the arts
8-1-1994_16:01

SHEET: 8 DATE: DRAWN BY DBF

16 BIT STEREO ADC

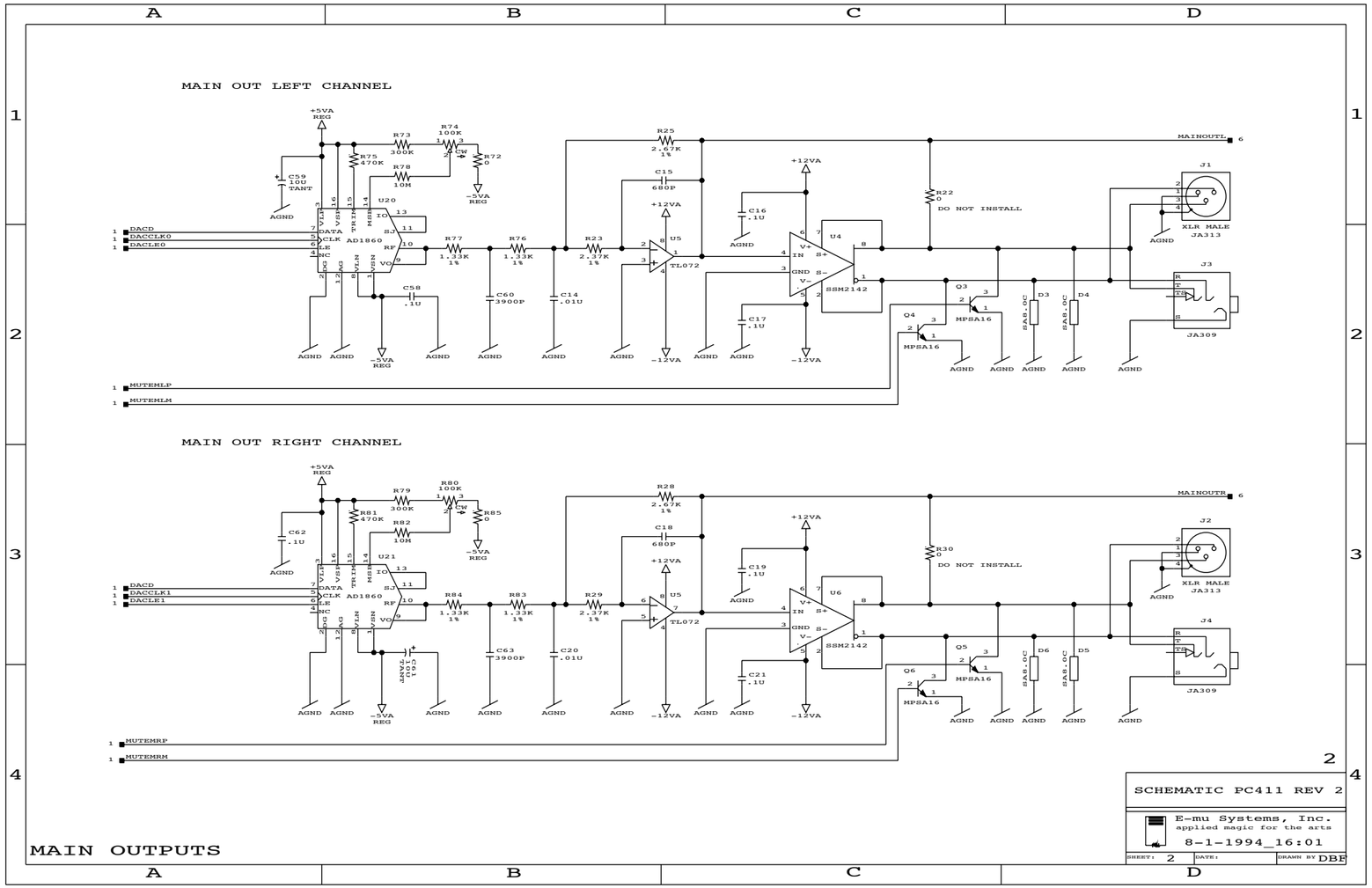

SCHEMATIC PC411 REV 2

E-mu Systems, Inc.
applied magic for the arts

8-1-1994_16:01

SHEET: 2 DATE: DRAWN BY DBF

MAIN OUTPUTS

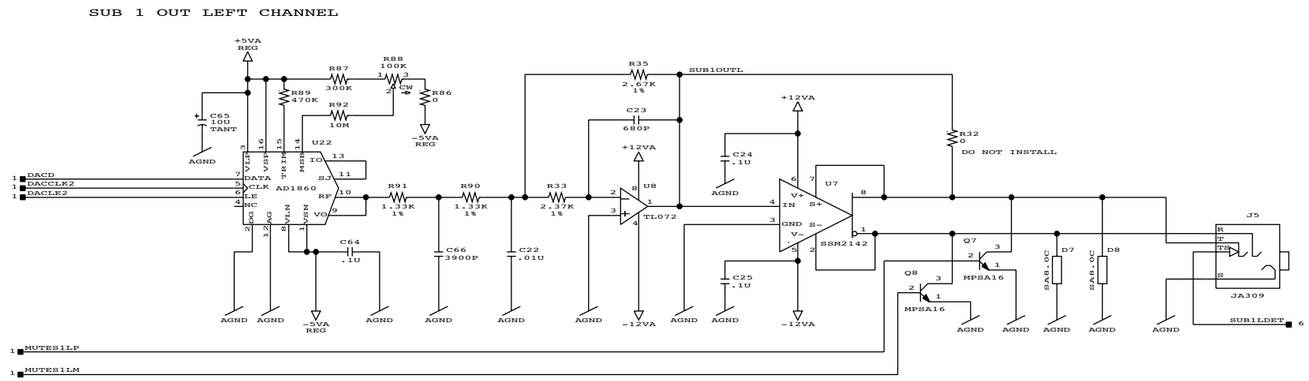
SUB 1 OUT LEFT CHANNEL
+5VA REG
R87 300K
R88 100K CW
R86 0
-5VA REG
R89 470K
R92 10M
C65 10U TANT
AGND
U22
AD1860
DACD
DACCLK2
DACLE2
R91 1.33K 1%
R90 1.33K 1%
C64 .1U
C66 3900P
C22 .01U
R35 2.67K 1%
SUB1OUTL
C23 680P
+12VA
U8
TL072
C24 .1U
C25 .1U
-12VA
U7
SSM2142
R32 0
DO NOT INSTALL
Q7
MPSA16
Q8
MPSA16
D7
D8
J5
JA309
SUB1LDET
MUTES1LP
MUTES1LM
SUB 1 OUT RIGHT CHANNEL
R93 300K
R94 100K CW
R95 0
R96 470K
R97 10M
C68 .1U
U23
DACD
DACCLK3
DACLE3
R99 1.33K 1%
R98 1.33K 1%
C69 3900P
C28 .01U
R38 2.67K 1%
SUB1OUTR
C26 680P
C27 .1U
C29 .1U
U9
R40 0
DO NOT INSTALL
Q9
MPSA16
Q10
MPSA16
D10
D9
J6
JA309
SUB1RDET
MUTES1RP
MUTES1RM
SCHEMATIC PC411 REV 2
E-mu Systems, Inc.
applied magic for the arts
8-1-1994_16:01
SHEET: 3
DATE:
DRAWN BY DBF
#1 SUBOUTS

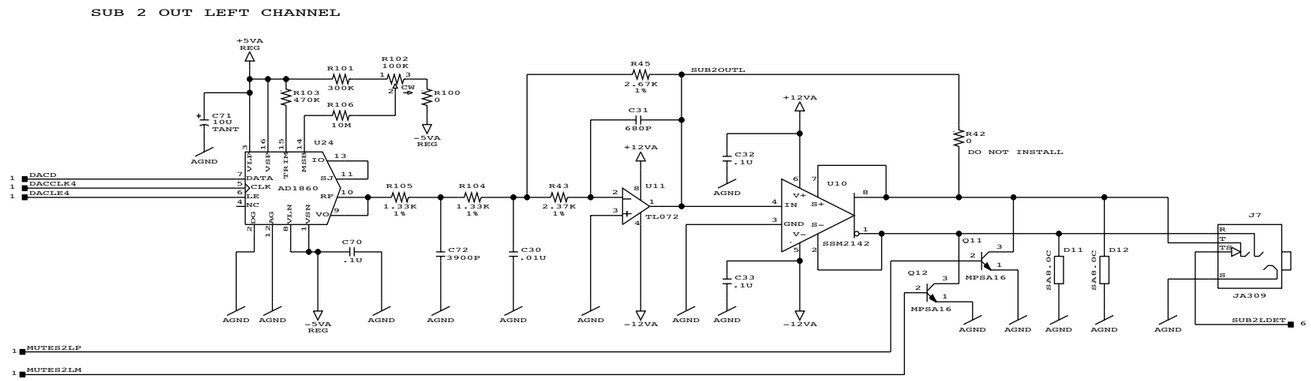

SCHEMATIC PC411 REV 2

E-mu Systems, Inc.
applied magic for the arts

8-1-1994_16:01

SHEET: 4 DATE: DRAWN BY DBF

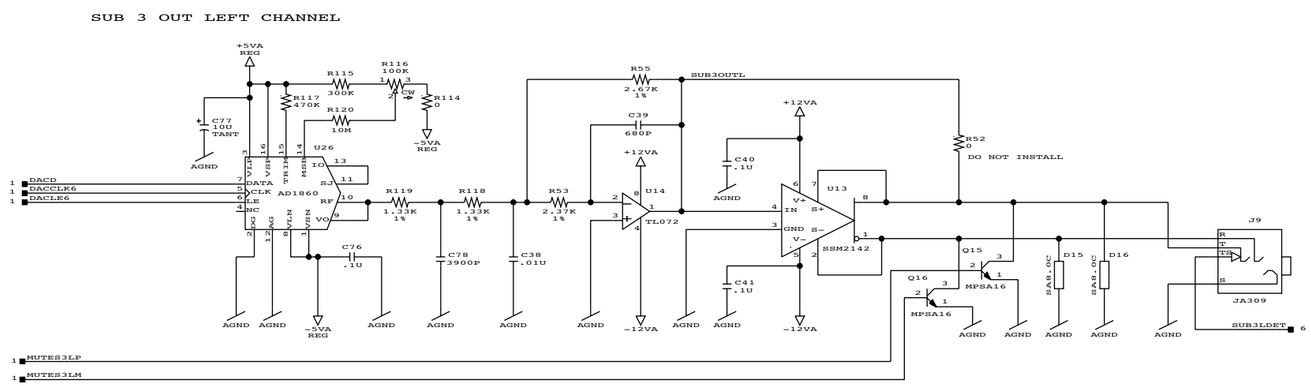

SCHEMATIC PC411 REV 2

E-mu Systems, Inc.
applied magic for the arts

8-1-1994_16:01

SHEET: 5 DATE: DRAWN BY DBF

#3 SUBOUTS

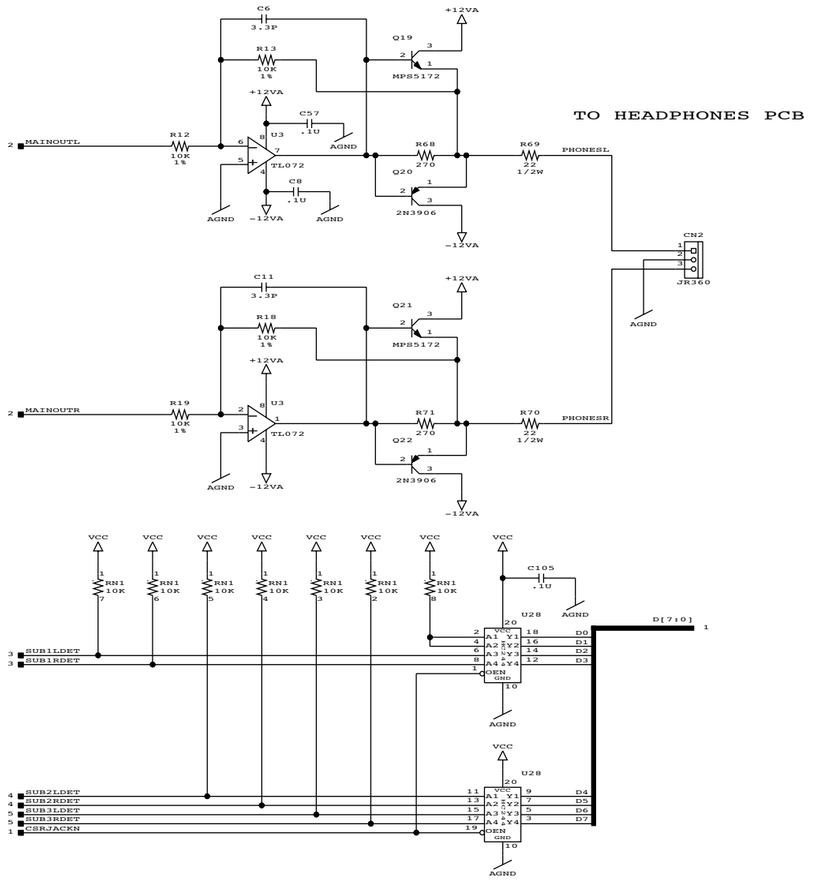

HEADPHONES AMP, SUBOUTS JACK DETECT

SCHEMATIC PC411 REV 2

E-mu Systems, Inc.
applied magic for the arts

8-1-1994_16:01

SHEET: 6 DATE: DRAWN BY DBF

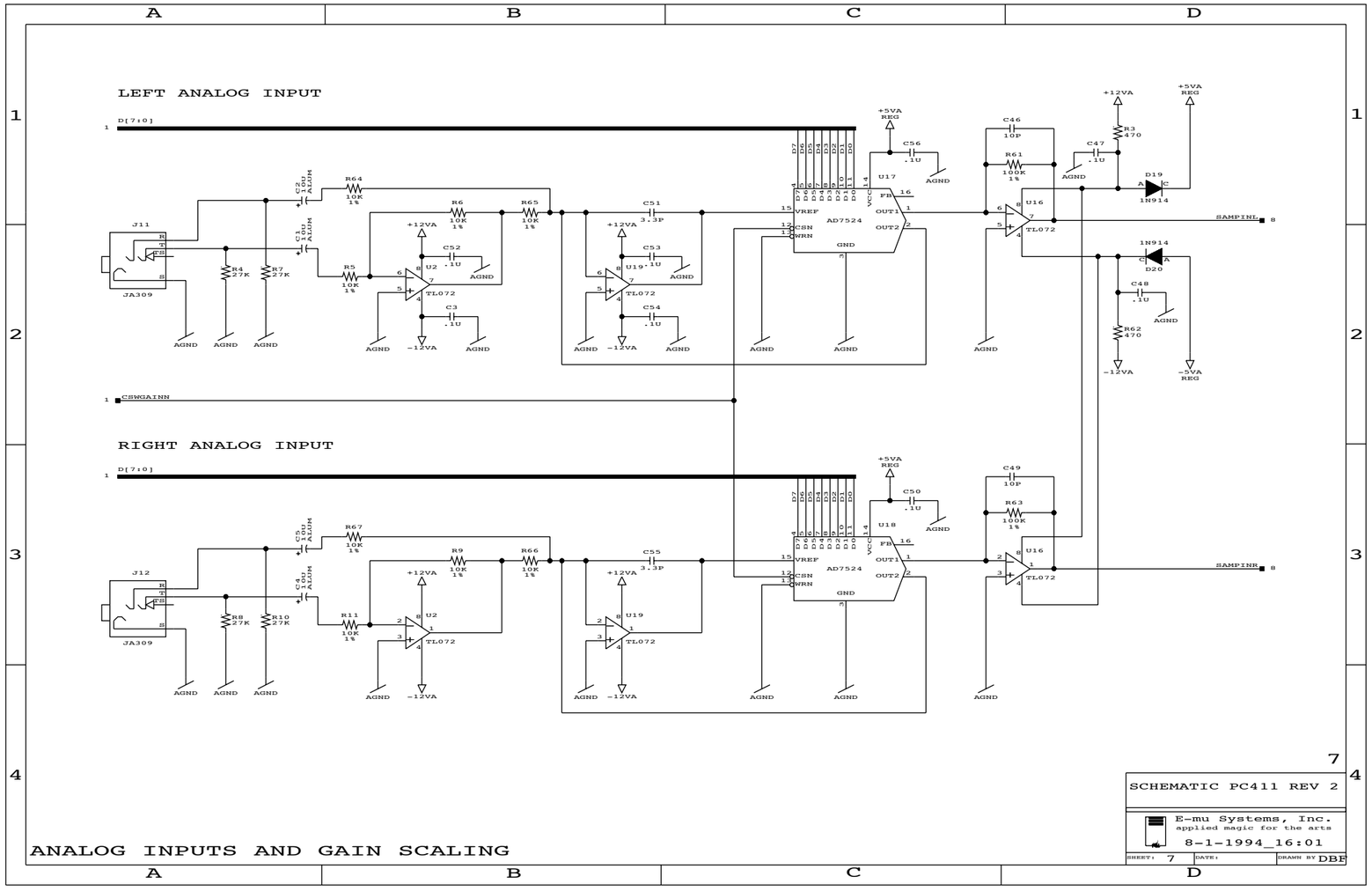

SCHEMATIC PC411 REV 2

E-mu Systems, Inc.
applied magic for the arts

8-1-1994_16:01

SHEET: 7 DATE: DRAWN BY DBF

ANALOG INPUTS AND GAIN SCALING

REVISIONS					
ECO	ZONE	LTR	DESCRIPTION	DATE	APPR.

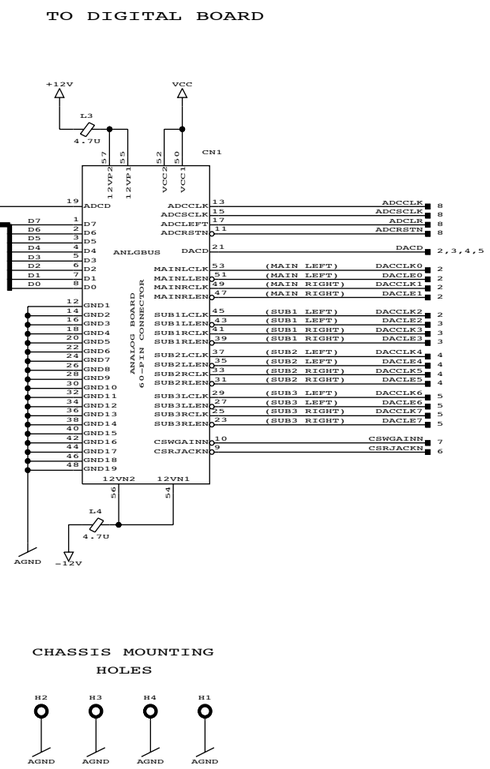

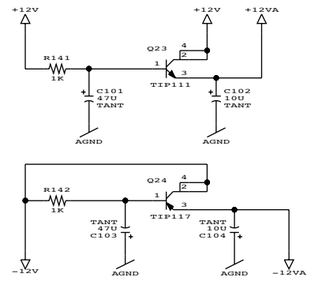

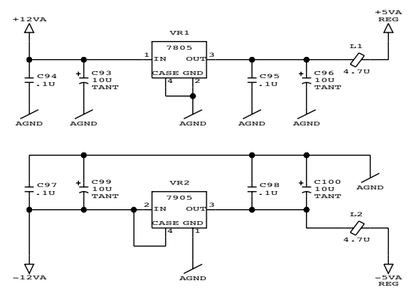

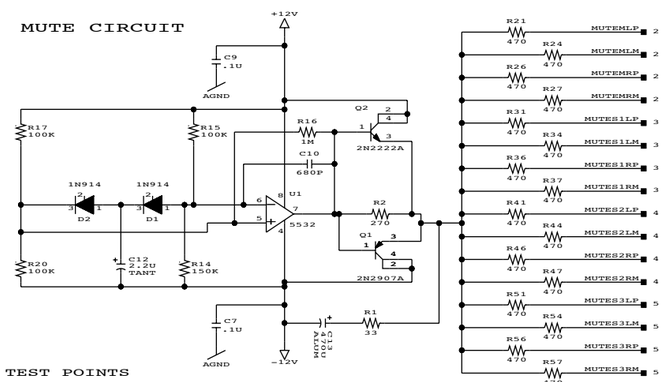

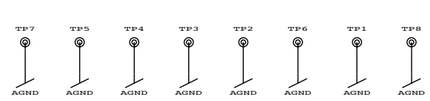

E-IV ANALOG BOARD REV 2
PHILLIPS SAA7360 ADC

E-mu Systems, Inc.
applied magic for the arts
1600 Green Hills Road
Scotts Valley, California 95066

DRAWING TITLE	SCHEMATIC PC411 8-1-1994_16:01		
SIZE D	REV. 2	DRAWING NO. SK411	
SCALE	DATE	APPR	
SHEET: 1 or 8		DRAWN BY DBF	

INSTALL 28F200BX-B FLASH EPROMS FOR 128K X 32 (0.5 MB) OF MEMORY

INSTALL 28F400BX-B FLASH EPROMS FOR 256K X 32 (1 MB) OF MEMORY

REVISIONS

ECO	ZONE	LTR	DESCRIPTION	DATE	APPR.
2557		A	INITIAL RELEASE	10/28 1994	DBF
2795		B	ADDED ALT STUFF OPT.	8/95	SMS
3090	C2	C	ADD CAP KLUDGE		

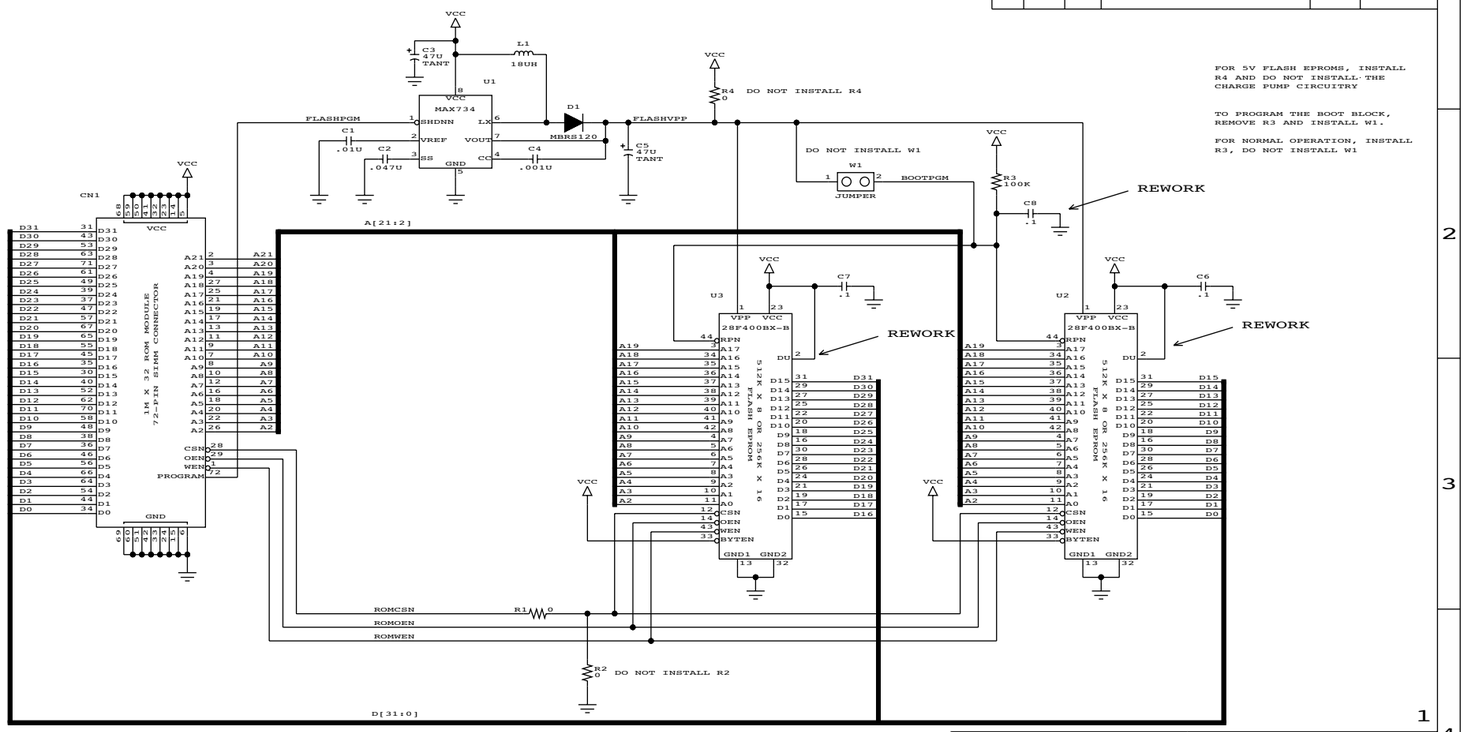

FOR 5V FLASH EPROMS, INSTALL R4 AND DO NOT INSTALL THE CHARGE PUMP CIRCUITRY

TO PROGRAM THE BOOT BLOCK, REMOVE R3 AND INSTALL W1.

FOR NORMAL OPERATION, INSTALL R3, DO NOT INSTALL W1

E-IV PROCESSOR ROM SIMM CARD

INTEL 28F400BX-B OR 28F200BX-B FLASH EPROMS

E-mu Systems, Inc.
applied magic for the arts
1600 Green Hills Road
Scotts Valley, California 95066

DRAWING TITLE: SCHEMATIC PC415 1-6-1997_11:18

SIZE	REV.	DRAWING NO.
D	C	SK415

SCALE	DATE	APPR

SHEET: 1 OF 1 — DRAWN BY DBF

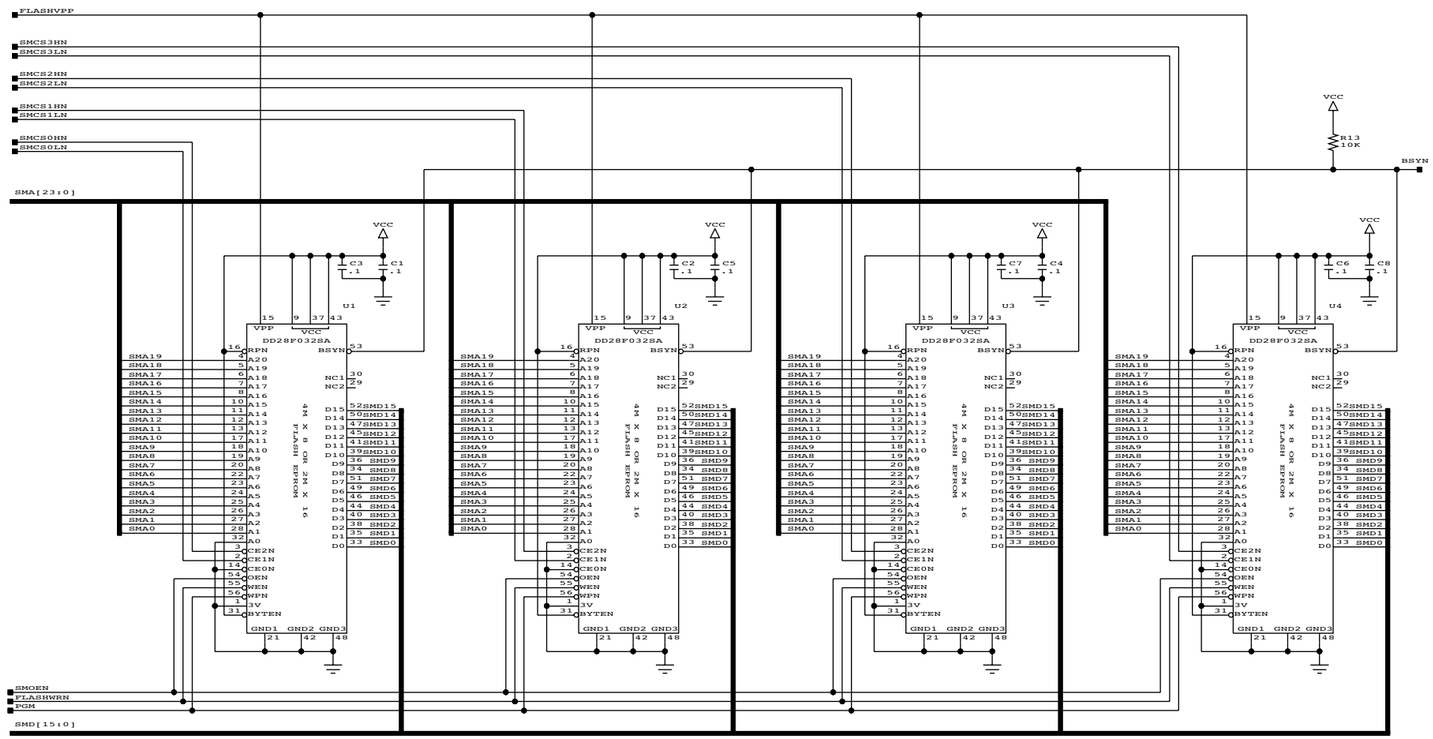

G2.0 CHIP ADDRESS RANGE (WORDS)

28F016 (1M x 16) PARTS: 000000 – 0FFFFF 100000 – 1FFFFF 200000 – 2FFFFF 300000 – 3FFFFF

28F032 (2M x 16) PARTS: 000000 – 1FFFFF 200000 – 3FFFFF 400000 – 5FFFFF 600000 – 7FFFFF

INSTALL FOUR DD28F016SA FLASH EPROMS FOR 4M X 16 (8 MB) OF MEMORY

INSTALL FOUR DD28F032SA FLASH EPROMS FOR 8M X 16 (16 MB) OF MEMORY

2

DRAWING TITLE	16MB SOUND FLASH SIMM FOR E4/e64
REV. A	DRAWING NO. SK417
DATE 8-28-1997 15:23	
SHEET 2	DRAWN BY TD

REVISIONS				
ECO	REV	DESCRIPTION	DATE	APPR.
3198	A	PRODUCTION RELEASE		

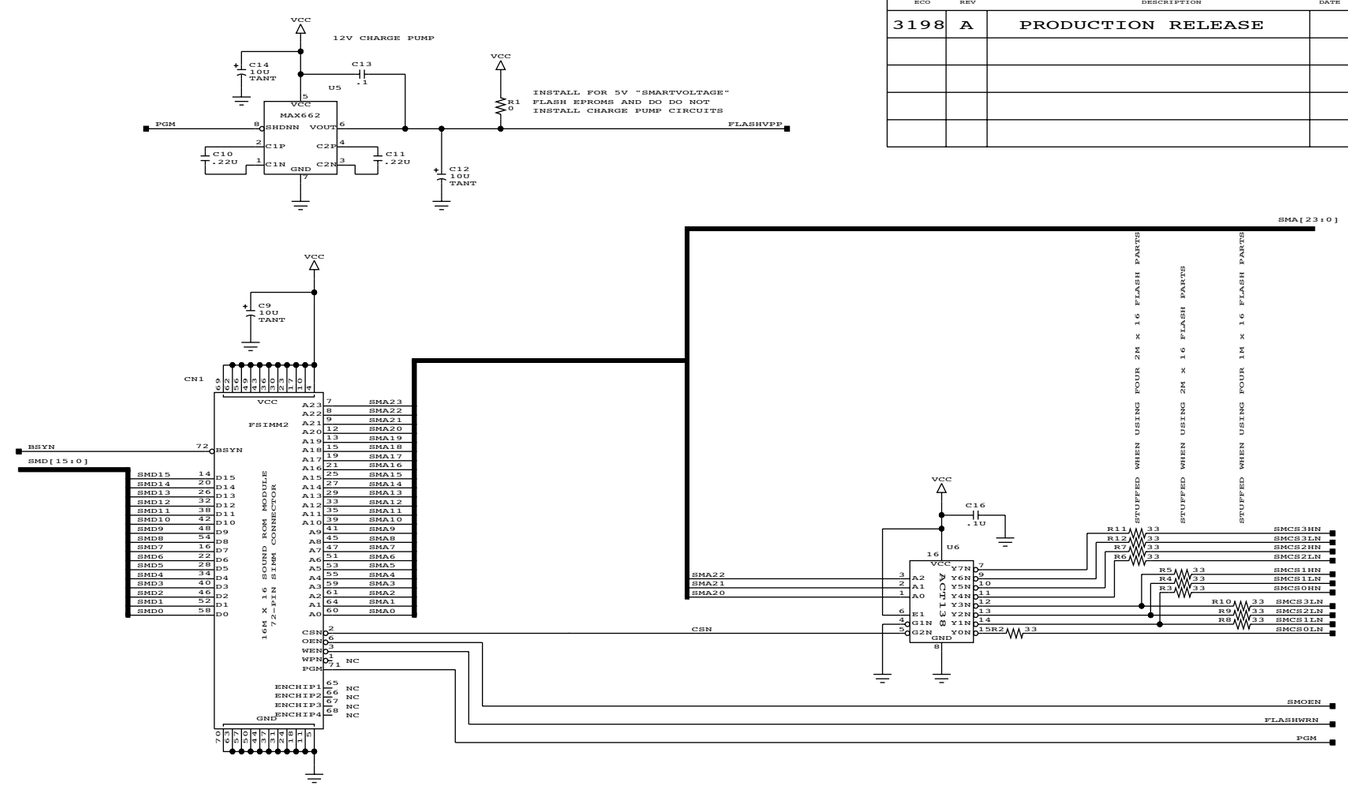

E4/E64 FLASH SOUND SIMM

E-mu Systems, Inc.
applied magic for the arts
1600 Green Hills Road
Scotts Valley, California 95066

DRAWING TITLE: 16MB SOUND FLASH SIMM FOR E4/e64

REV. A | DRAWING NO. SK417

DATE 8-28-1997 15:23 | CHECK

SHEET: 1 OF 2 | DRAWN | APPR TD

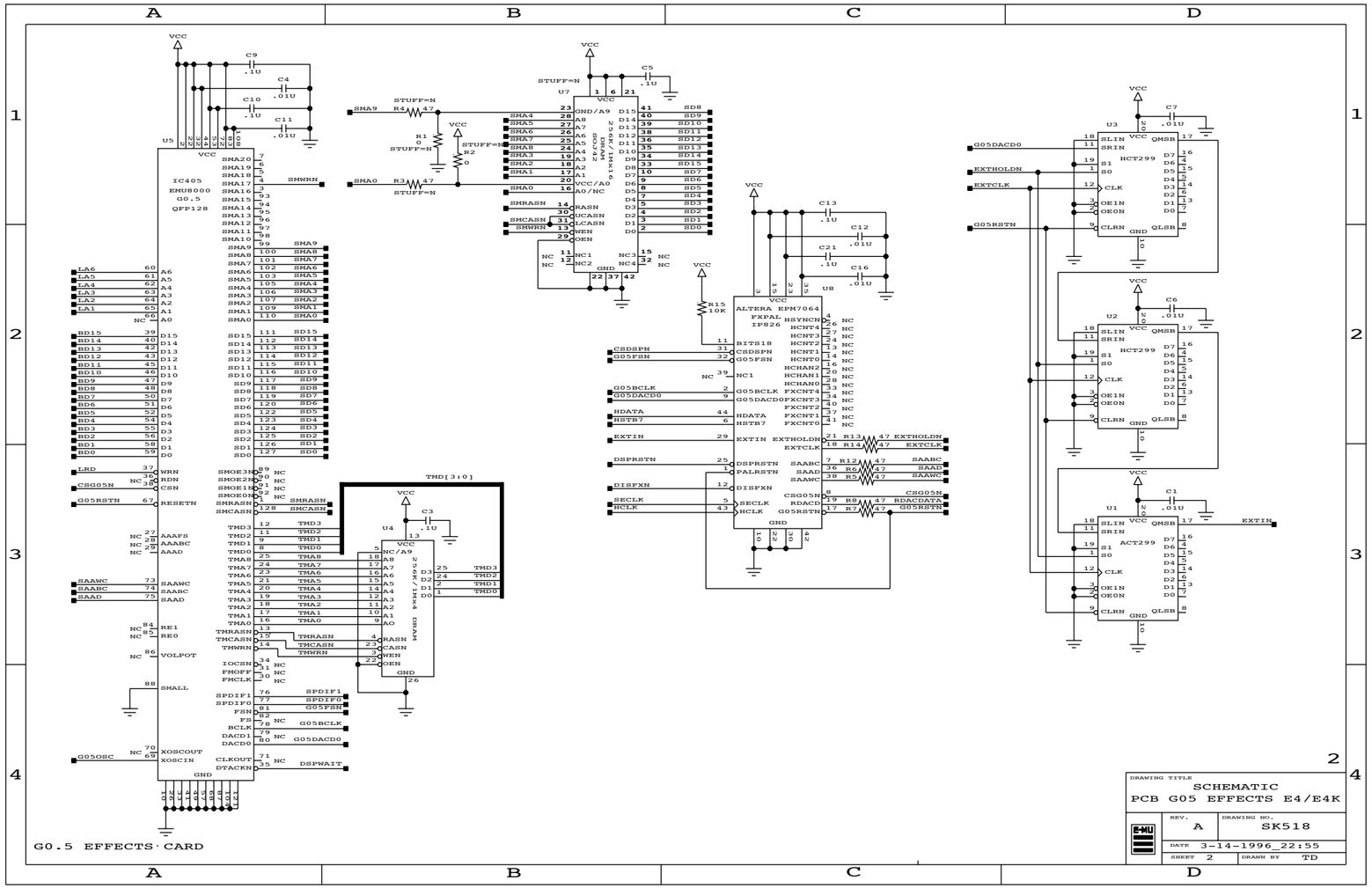

DRAWING TITLE
SCHEMATIC
PCB G05 EFFECTS E4/E4K

REV.	DRAWING NO.
A	SK518
DATE 3-14-1996_22:55	
SHEET 2	DRAWN BY TD

REVISIONS				
ECO	REV	DESCRIPTION	DATE	APPR.
2941	A	PRODUCTION RELEASE	3/14/96	TD

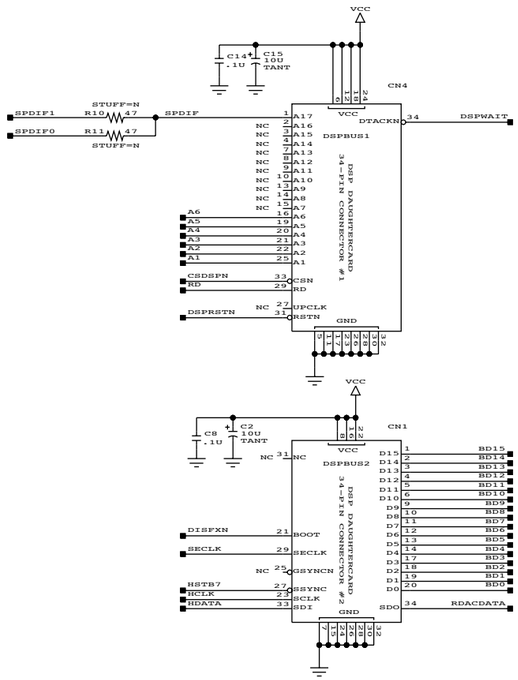

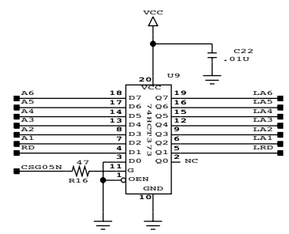

CLOCK DOUBLER
512FS TO 1024FS

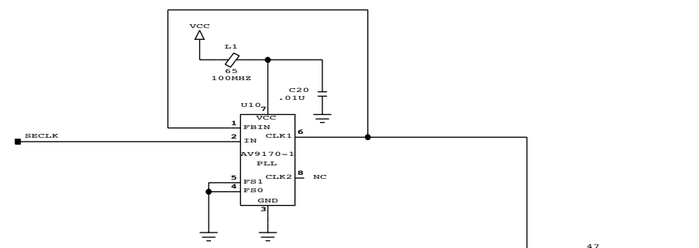

ALTERNATIVE CIRCUIT

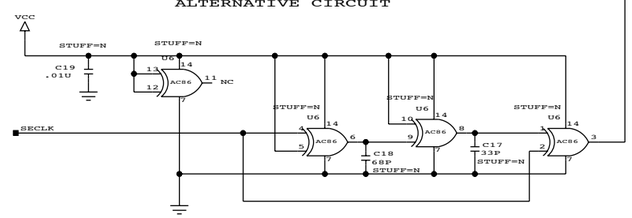

E4/E4K COMPATIBLE G0.5 EFFECTS CARD

E-mu Systems, Inc.
applied magic for the arts
1600 Green Hills Road
Scotts Valley, California 95066

DRAWING TITLE
SCHEMATIC
PCB G05 EFFECTS E4/E4K

REV.	DRAWING NO.
A	SK518

DATE 3-14-1996_22:55 CHECK
SHEET: 1 OF 2 DRAWN TD APPR TD

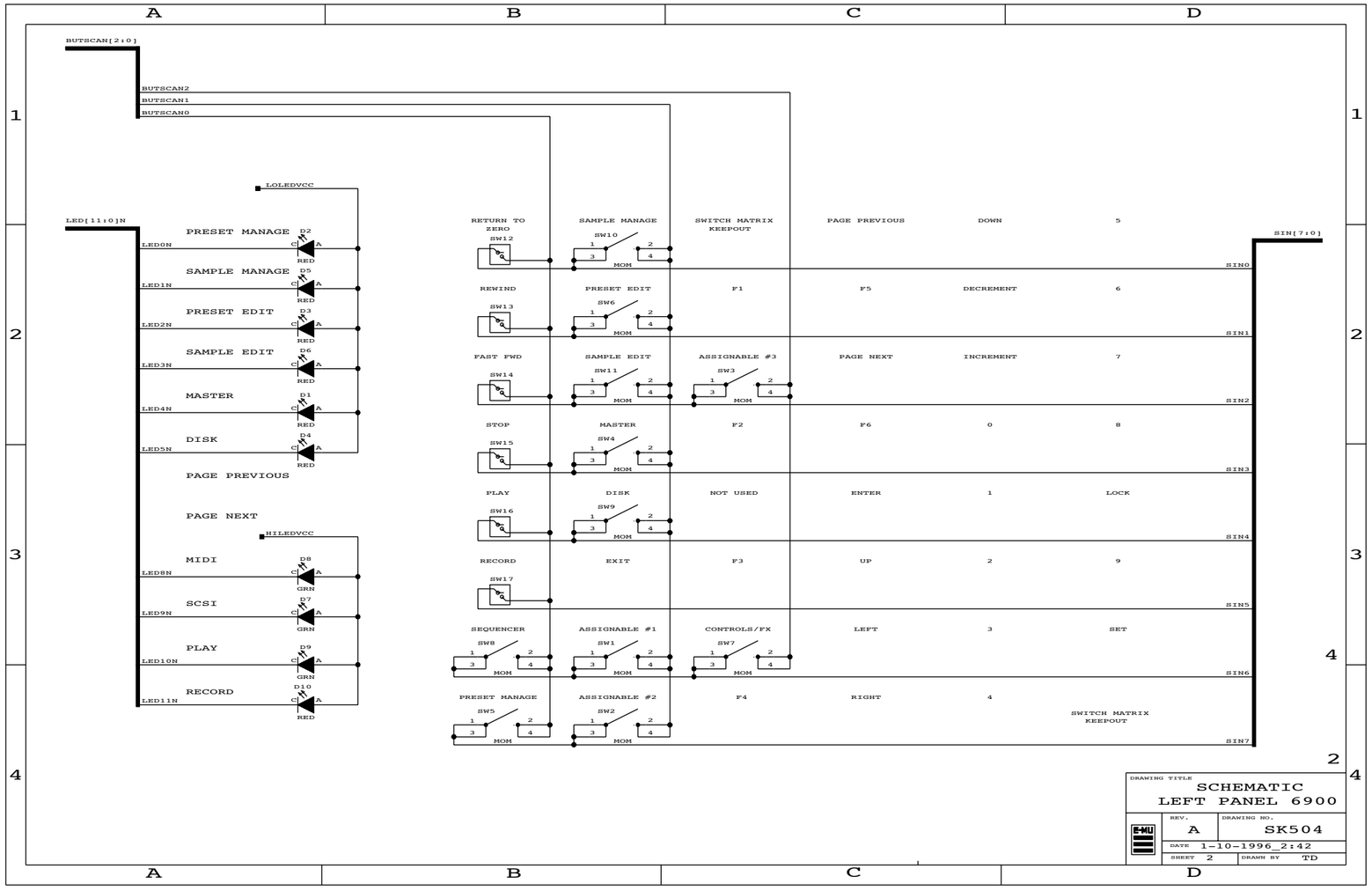

DRAWING TITLE
SCHEMATIC
LEFT PANEL 6900

REV.	DRAWING NO.
A	SK504
DATE 1-10-1996_2:42	
SHEET 2	DRAWN BY TD

REVISIONS				
ECO	REV	DESCRIPTION	DATE	APPR.
2896	A	PRODUCTION RELEASE	1/9/96	TD

TO RIGHT PANEL BOARD

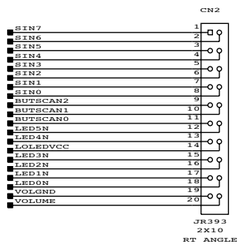

TO ANALOG BOARD

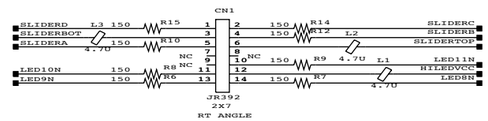

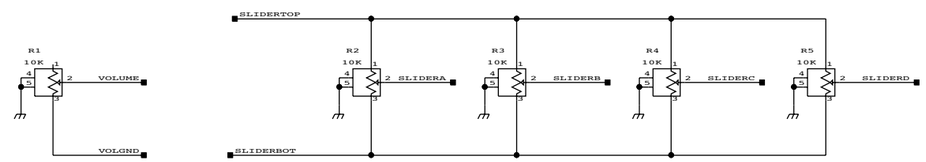

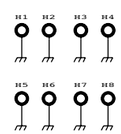

1

E4 KEYBOARD LEFT PANEL

E-mu Systems, Inc.
applied magic for the arts
1600 Green Hills Road
Scotts Valley, California 95066

DRAWING TITLE: SCHEMATIC LEFT PANEL 6900

REV. A | DRAWING NO. SK504

DATE 1-10-1996_2:41 | CHECK

SHEET: 1 OF 2 | DRAWN TD | APPR TD

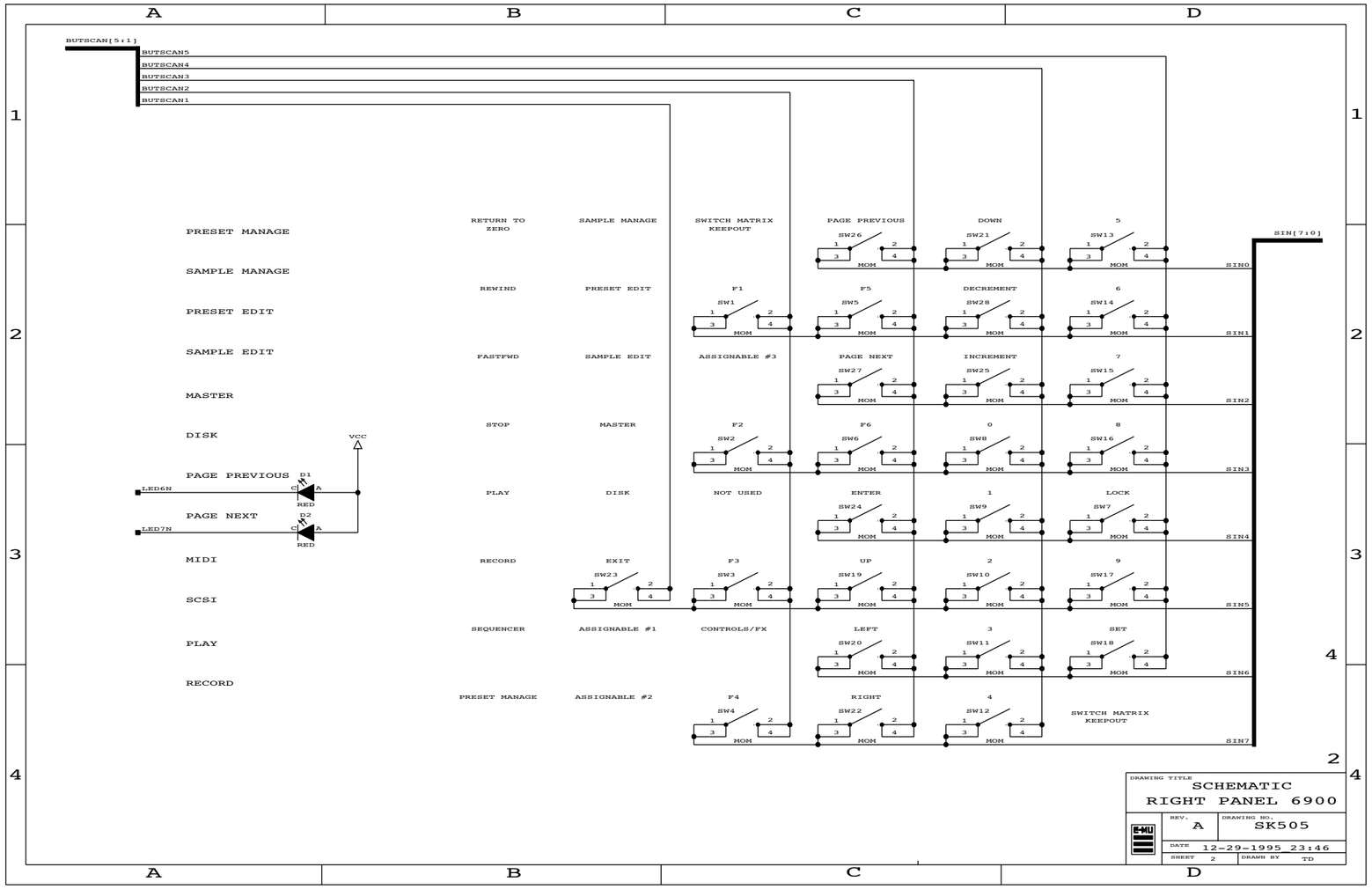

DRAWING TITLE
SCHEMATIC
RIGHT PANEL 6900

E-MU

REV. A	DRAWING NO. SK505
DATE 12-29-1995 23:46	
SHEET 2	DRAWN BY TD

REVISIONS				
ECO	REV	DESCRIPTION	DATE	APPR.
2892	A	PRODUCTION RELEASE	01/01/96	TD

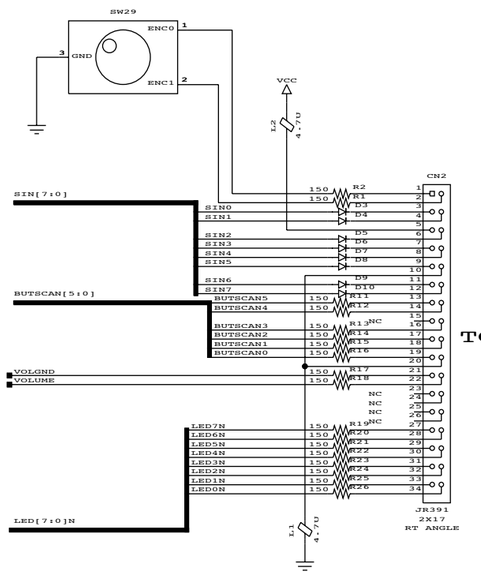

TO MAIN PCB

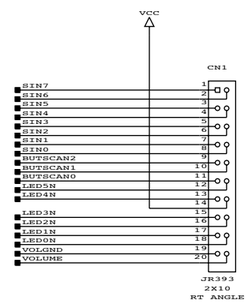

TO LEFT PANEL

1

E-mu Systems, Inc.
applied magic for the arts
1600 Green Hills Road
Scotts Valley, California 95066

DRAWING TITLE
SCHEMATIC
RIGHT PANEL 6900

REV.	DRAWING NO.
A	SK505

DATE	12-29-1995_23:47	CHECK	
SHEET: 1 OF 2	DRAWN TD	APPR	TD

E4 KEYBOARD RIGHT PANEL

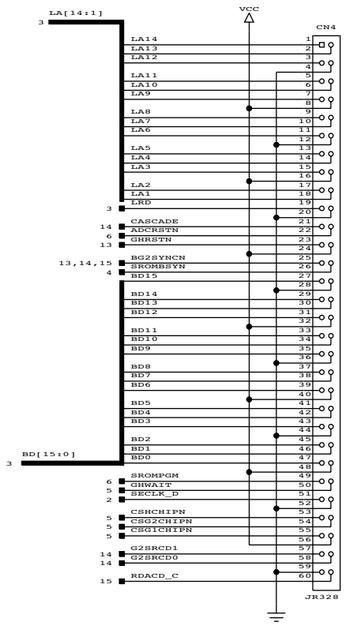

CONNECTOR TO POLYPHONY BOARD

17

DRAWING TITLE
SCHEMATIC
6900 DIGITAL

REV. C	DRAWING NO. SK502
DATE 5-1-1997_16:54	
SHEET 17	DRAWN BY TD

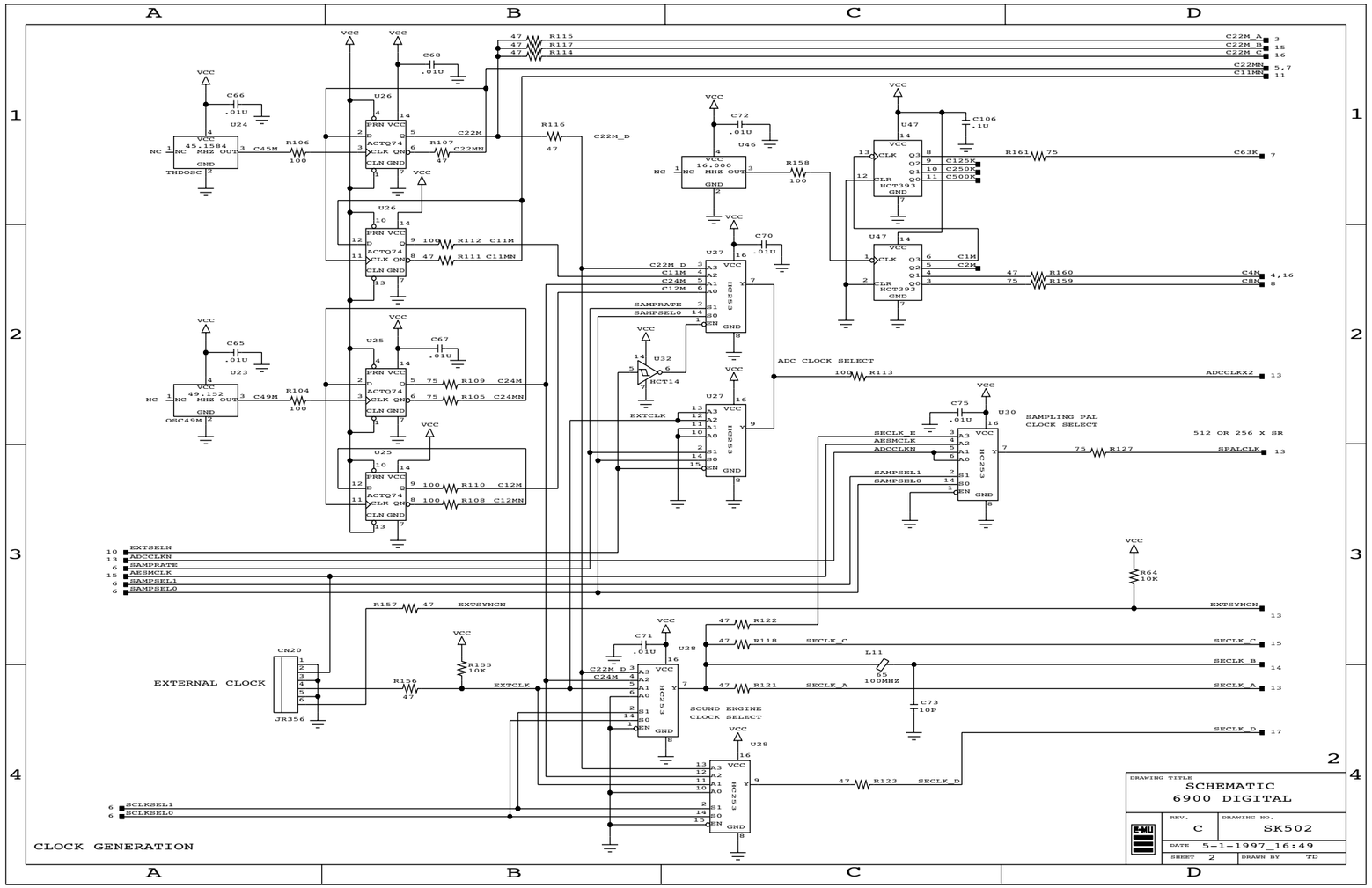
A
B
C
D
1
2
3
4
U24
45.1584 MHZ
TMDOSC
U23
49.152 MHZ
OSC49M
U26
U25
ACTQ74
HCT393
U46
16.000 MHZ
U47
U27
U32
HCT14
U30
SAMPLING PAL CLOCK SELECT
512 OR 256 X SR
ADC CLOCK SELECT
SOUND ENGINE CLOCK SELECT
U28
HC253
CN20
JR356
EXTERNAL CLOCK
L11
65 100MHZ
C22M_A
C22M_B
C22M_C
C22MN
C11MN
C63K
C125K
C250K
C500K
C4M
C8M
ADCCLKX2
SPALCLK
EXTSYNCN
SECLK_C
SECLK_B
SECLK_A
SECLK_D
EXTSELN
ADCCLKN
SAMPRATE
AESMCLK
SAMPSEL1
SAMPSEL0
SCLKSEL1
SCLKSEL0
EXTCLK
CLOCK GENERATION
DRAWING TITLE
SCHEMATIC
6900 DIGITAL
REV. C
DRAWING NO. SK502
DATE 5-1-1997 16:49
SHEET 2
DRAWN BY TD

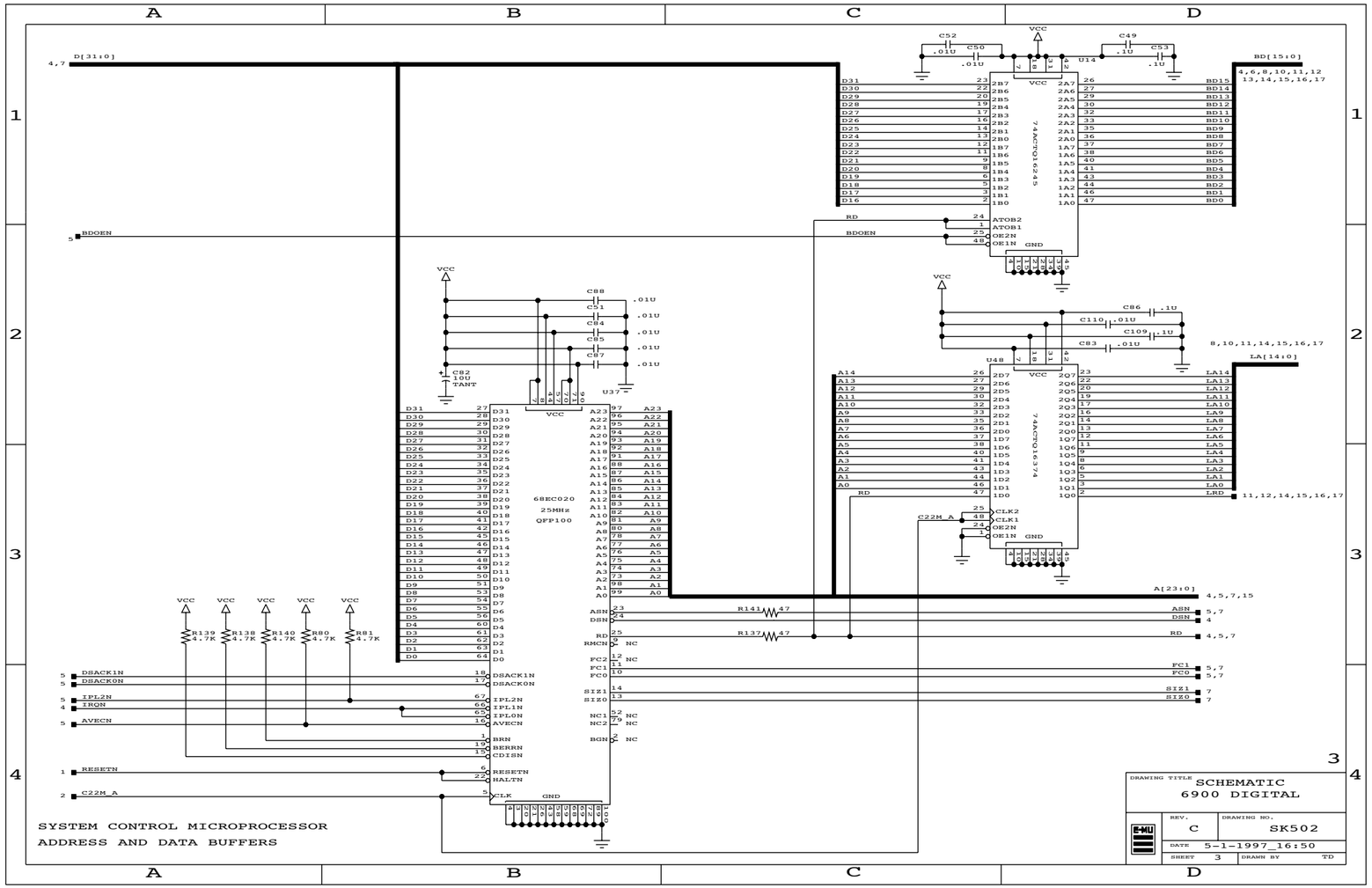
SYSTEM CONTROL MICROPROCESSOR
ADDRESS AND DATA BUFFERS
74ACTQ16245
74ACTQ16374
68EC020
25MHz
QFP100
D[31:0]
BD[15:0]
LA[14:0]
A[23:0]
BDOEN
RD
C22M_A
RESETN
DSACK1N
DSACK0N
IPL2N
IPL1N
IPL0N
IRQN
AVECN
BRN
BERRN
CDISN
HALTN
ASN
DSN
RMCN
FC2
FC1
FC0
SIZ1
SIZ0
NC1
NC2
BGN
LRD
VCC
GND
DRAWING TITLE
SCHEMATIC
6900 DIGITAL
REV.
C
DRAWING NO.
SK502
DATE
5-1-1997_16:50
SHEET
3
DRAWN BY
TD

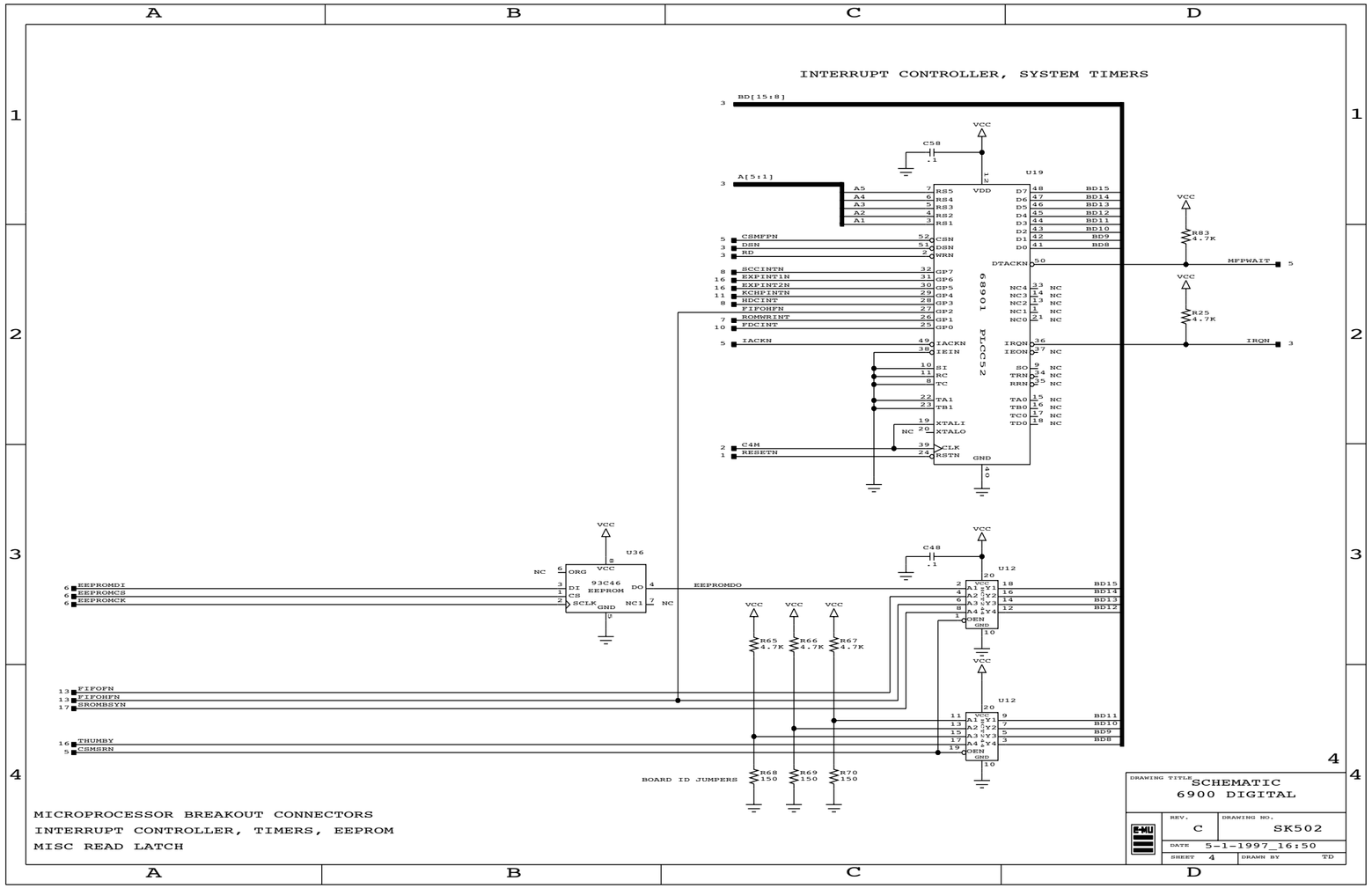
INTERRUPT CONTROLLER, SYSTEM TIMERS
BD[15:8]
A[5:1]
U19
68901
PLCC52
VDD
GND
C58
.1
R83
4.7K
R25
4.7K
MPFWAIT
IRQN
CSMFPN
DSN
RD
SCCINTN
EXPINT1N
EXPINT2N
KCHPINTN
HDCINT
FIFOHFN
ROMWRINT
FDCINT
IACKN
C4M
RESETN
U36
93C46
EEPROM
EEPROMDI
EEPROMCS
EEPROMCK
EEPROMDO
U12
C48
FIFOFN
FIFOHFN
SROMBSYN
THUMBY
CSMBRN
R65
4.7K
R66
4.7K
R67
4.7K
BOARD ID JUMPERS
R68
150
R69
150
R70
150
MICROPROCESSOR BREAKOUT CONNECTORS
INTERRUPT CONTROLLER, TIMERS, EEPROM
MISC READ LATCH
DRAWING TITLE
SCHEMATIC
6900 DIGITAL
REV.
C
DRAWING NO.
SK502
DATE
5-1-1997_16:50
SHEET
4
DRAWN BY
TD

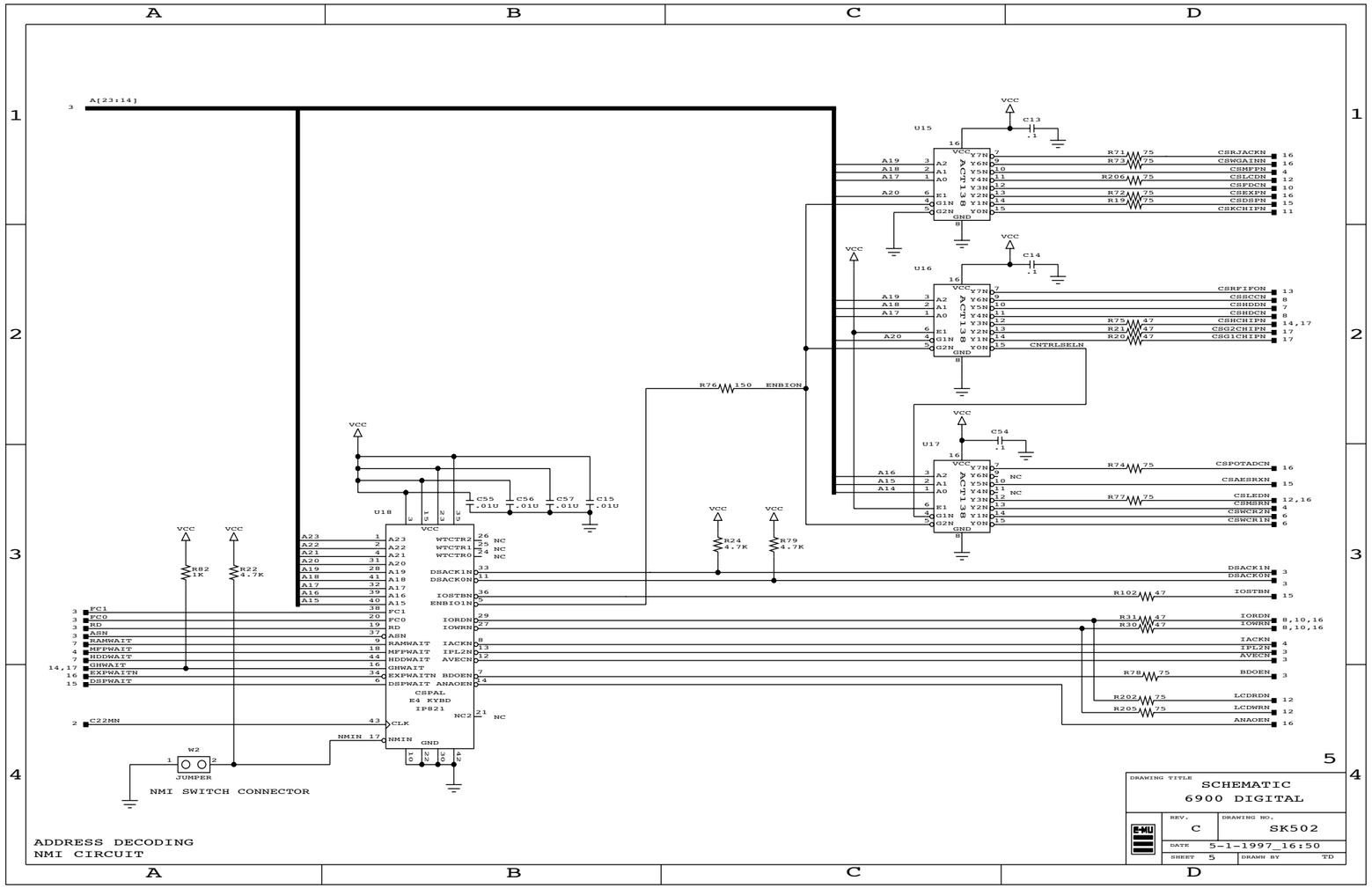
A[23:14]
U15
U16
U17
U18
C13
C14
C54
C55
C56
C57
C15
R71
R73
R206
R72
R19
R75
R22
R26
R74
R77
R76
ENBION
CNTRLSELN
CSRJACKN
CSWGAINN
CSMFPN
CSLCDN
CSPDCN
CSEXPN
CSDSPN
CSKCHIPN
CSRFIFON
CSSCCN
CSHDDN
CSHDCN
CSHCHIPN
CSG2CHIPN
CSG1CHIPN
CSPOTADCN
CSAESRXN
CSLEDN
CSMRRN
CSWCR2N
CSWCR1N
DSACK1N
DSACK0N
IOSTBN
IORDN
IOWRN
IACKN
IPL2N
AVECN
BDOEN
LCDRDN
LCDWRN
ANAOEN
R24
R79
R82
R22
FC1
FC0
RD
ASN
RAMWAIT
MFPWAIT
HDDWAIT
GHWAIT
EXPWAITN
DSPWAIT
C22MN
CSPAL
E4 KYBD
IP821
CLK
NMIN
GND
W2
JUMPER
NMI SWITCH CONNECTOR
ADDRESS DECODING
NMI CIRCUIT
DRAWING TITLE
SCHEMATIC
6900 DIGITAL
REV.
C
DRAWING NO.
SK502
DATE
5-1-1997_16:50
SHEET
5
DRAWN BY
TD

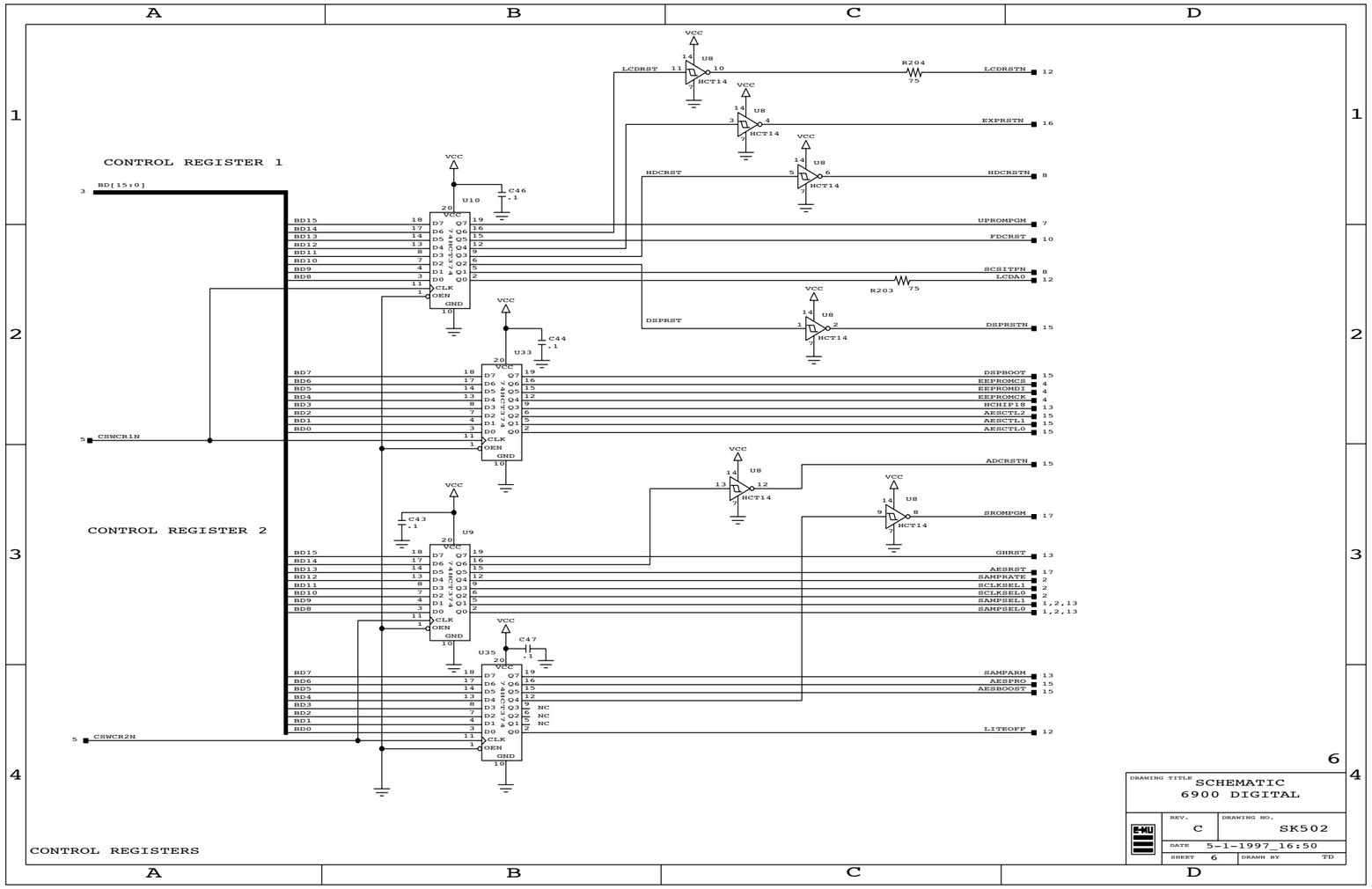

DRAWING TITLE
SCHEMATIC
6900 DIGITAL

REV. C	DRAWING NO. SK502
DATE 5-1-1997_16:50	
SHEET 6	DRAWN BY TD

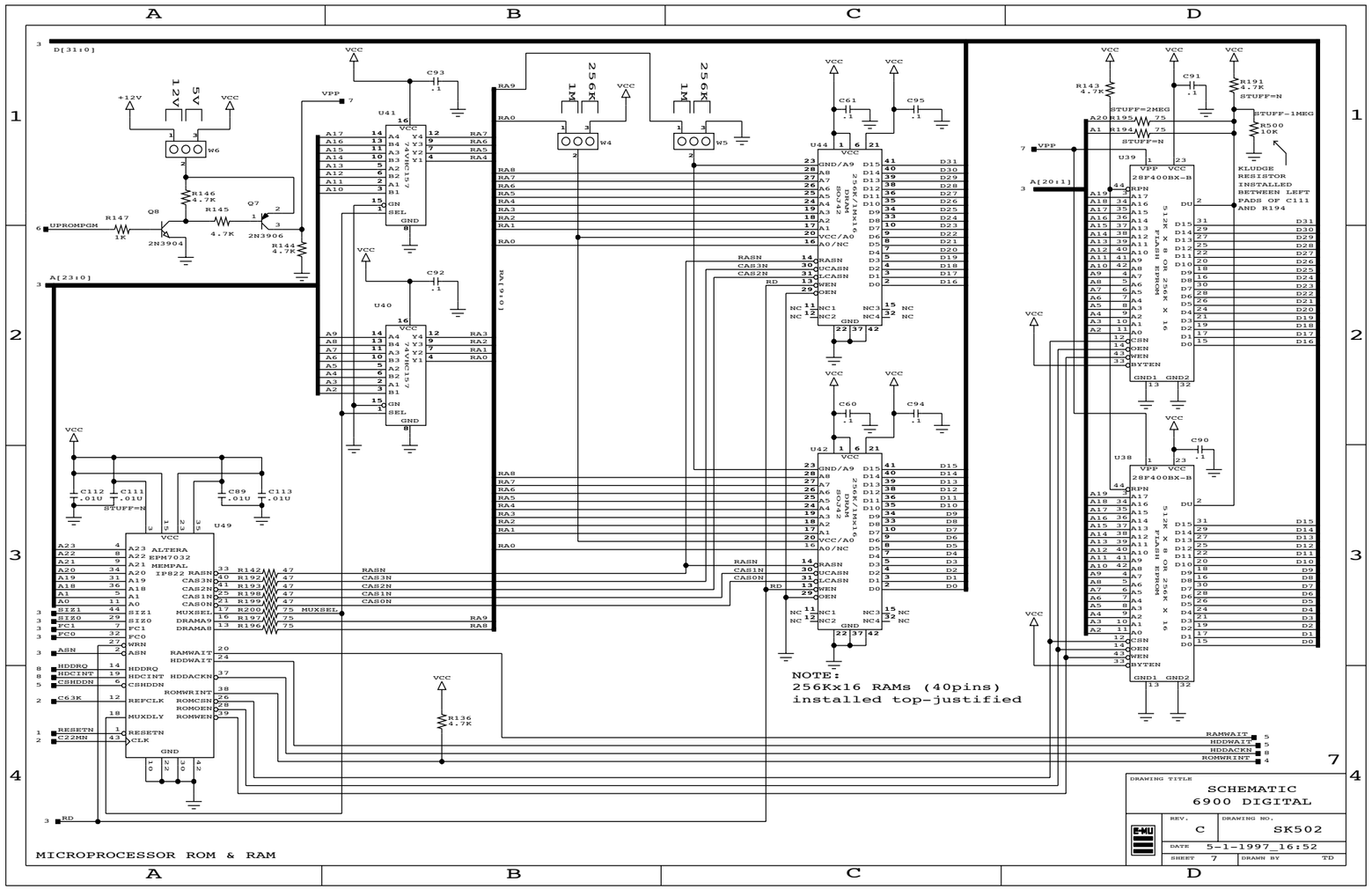

DRAWING TITLE
SCHEMATIC
6900 DIGITAL

REV. C	DRAWING NO. SK502
DATE 5-1-1997_16:52	
SHEET 7	DRAWN BY TD

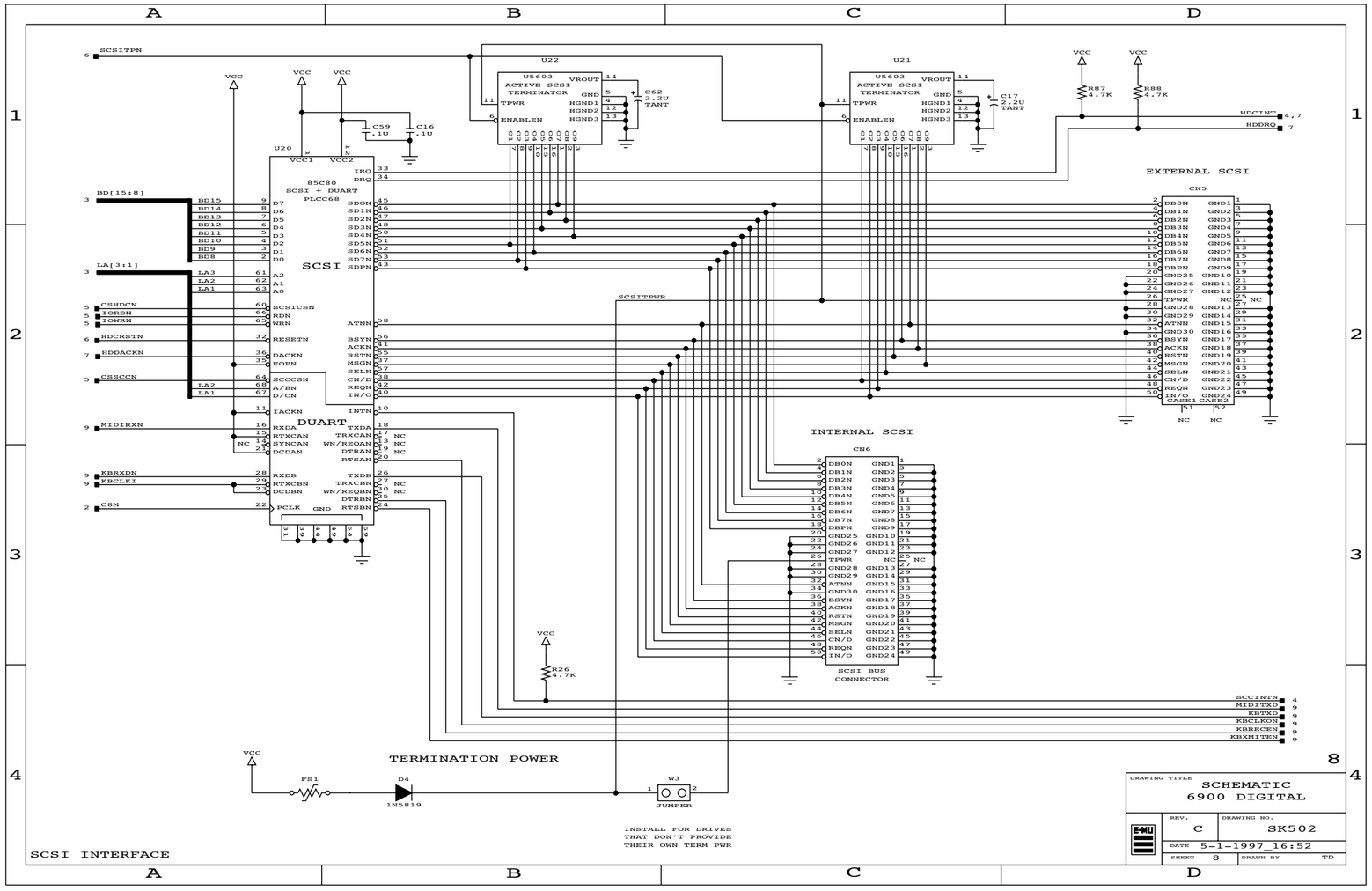
SCSITPN
U22
U5603
ACTIVE SCSI TERMINATOR
VROUT
GND
TPWR
ENABLEN
HGND1
HGND2
HGND3
C62 2.2U TANT
U21
C17 2.2U TANT
VCC
R87 4.7K
R88 4.7K
HDCINT
HDDRQ
C59 .1U
C16 .1U
U20
VCC1
VCC2
IRQ
DRQ
85C80
SCSI + DUART
PLCC68
SCSI
BD[15:8]
LA[3:1]
CSHDCN
IORDN
IOWRN
HDCRSTN
HDDACKN
CSSCCN
SCSITPWR
MIDIRXN
KBRXDN
KBCLKI
C8M
DUART
EXTERNAL SCSI
CN5
INTERNAL SCSI
CN6
SCSI BUS CONNECTOR
R26 4.7K
SCCINTN
MIDITXD
KBTXD
KBCLKON
KBRECEN
KBXMITEN
TERMINATION POWER
FS1
D4
1N5819
W3
JUMPER
INSTALL FOR DRIVES THAT DON'T PROVIDE THEIR OWN TERM PWR
SCSI INTERFACE
DRAWING TITLE
SCHEMATIC
6900 DIGITAL
REV. C
DRAWING NO. SK502
DATE 5-1-1997_16:52
SHEET 8
DRAWN BY TD

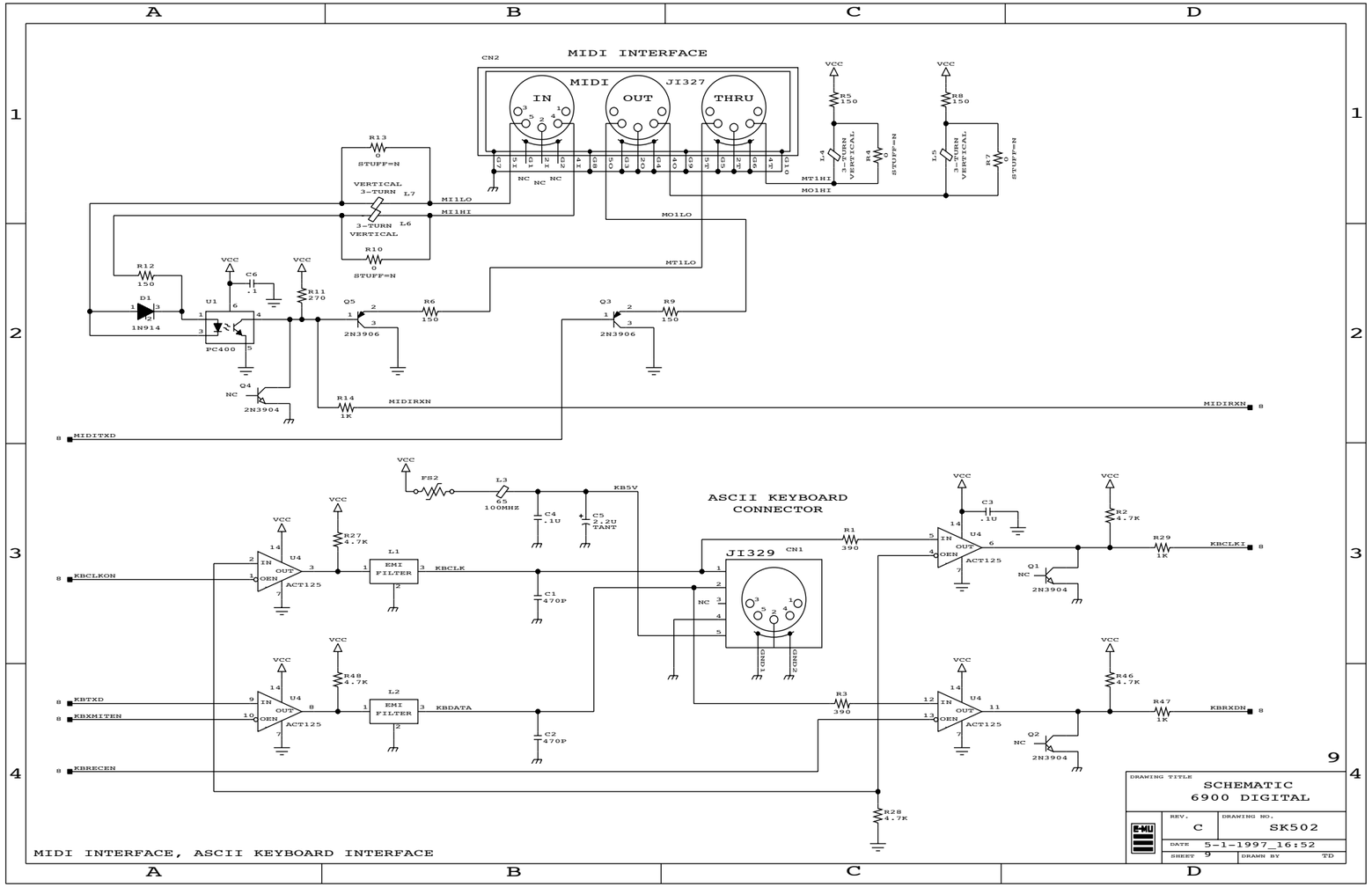
MIDI INTERFACE
CN2
MIDI
JI327
IN
OUT
THRU
R13
0
STUFF=N
VERTICAL
3-TURN
L7
L6
R10
0
STUFF=N
MI1LO
MI1HI
MO1LO
MT1LO
MT1HI
MO1HI
R5
150
R8
150
L4
L5
R4
R7
R12
150
D1
1N914
U1
PC400
C6
.1
R11
270
Q5
2N3906
R6
150
Q3
2N3906
R9
150
Q4
2N3904
R14
1K
MIDIRXN
MIDITXD
VCC
FS2
L3
65
100MHZ
KB5V
C4
.1U
C5
2.2U
TANT
ASCII KEYBOARD
CONNECTOR
JI329
CN1
GND1
GND2
R1
390
C3
.1U
U4
IN
OUT
OEN
ACT125
R2
4.7K
R29
1K
KBCLKI
Q1
2N3904
KBCLKON
R27
4.7K
L1
EMI
FILTER
KBCLK
C1
470P
R48
4.7K
L2
KBDATA
C2
470P
KBTXD
KBXMITEN
KBRECEN
R3
390
R46
4.7K
R47
1K
KBRXDN
Q2
2N3904
R28
4.7K
DRAWING TITLE
SCHEMATIC
6900 DIGITAL
REV.
C
DRAWING NO.
SK502
DATE
5-1-1997_16:52
SHEET
9
DRAWN BY
TD
MIDI INTERFACE, ASCII KEYBOARD INTERFACE

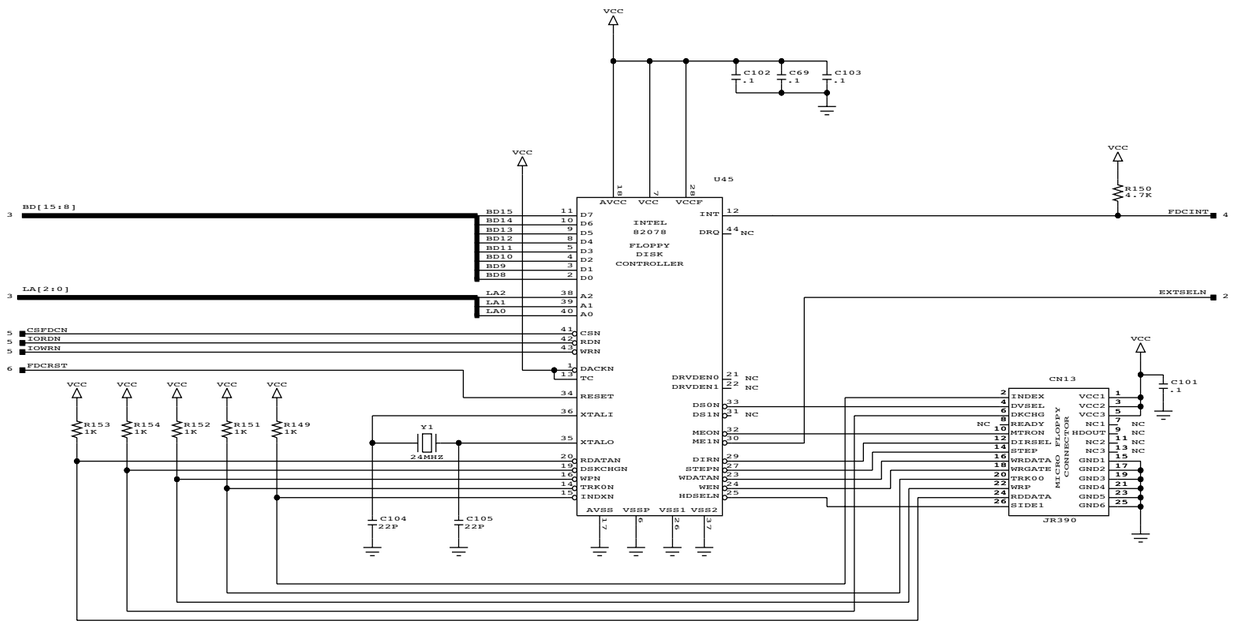

10

DRAWING TITLE
SCHEMATIC
6900 DIGITAL

REV. C	DRAWING NO. SK502
DATE 5-1-1997_16:52	
SHEET 10	DRAWN BY TD

FLOPPY DISK DRIVE INTERFACE

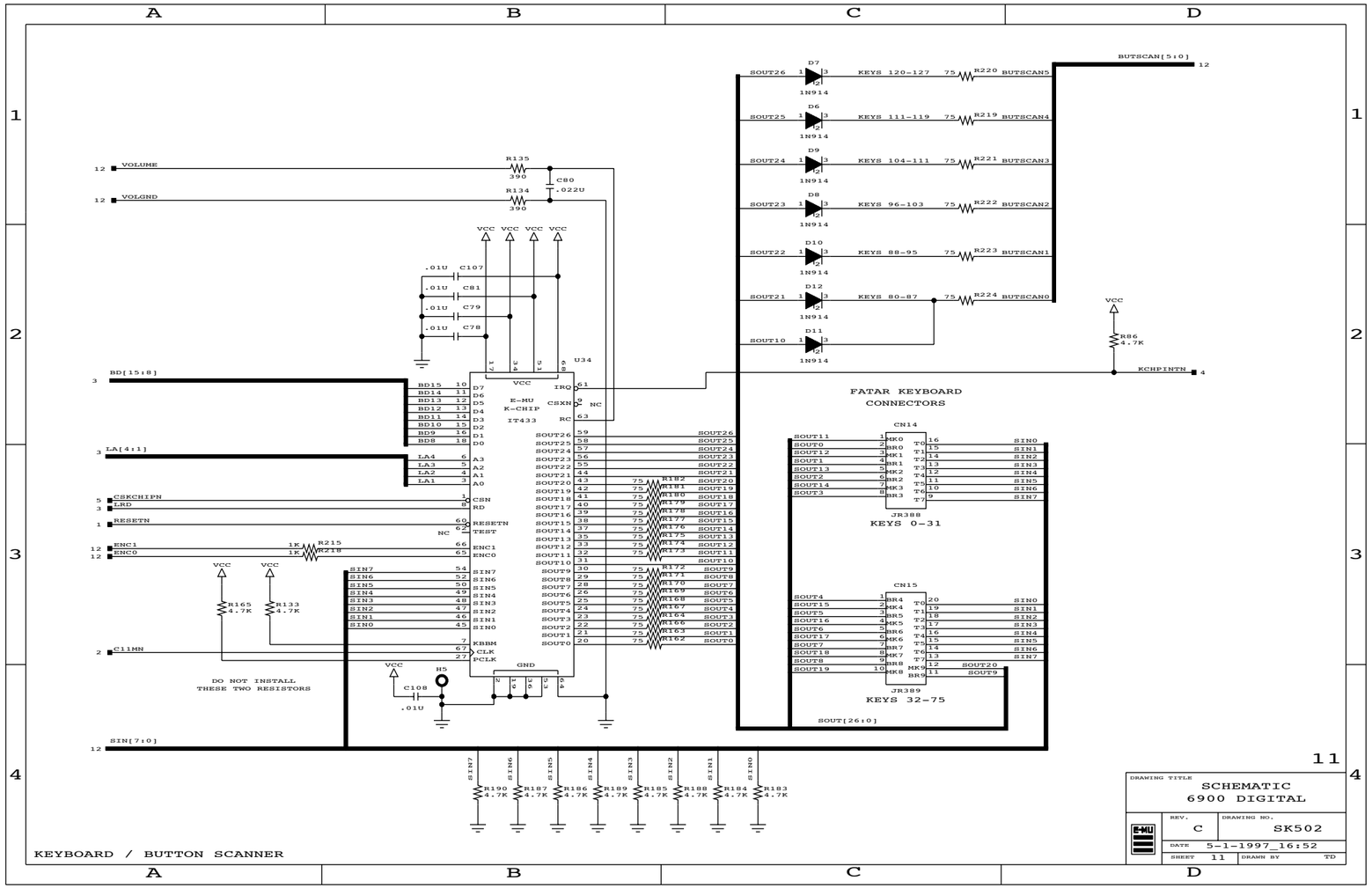
FATAR KEYBOARD
CONNECTORS
E-MU
K-CHIP
IT433
U34
KEYS 120-127
KEYS 111-119
KEYS 104-111
KEYS 96-103
KEYS 88-95
KEYS 80-87
BUTSCAN[5:0]
KCHPINTN
VOLUME
VOLGND
BD[15:8]
LA[4:1]
CSKCHIPN
LRD
RESETN
ENC1
ENC0
C11MN
SIN[7:0]
SOUT[26:0]
CN14
JR388
KEYS 0-31
CN15
JR389
KEYS 32-75
DO NOT INSTALL
THESE TWO RESISTORS
KEYBOARD / BUTTON SCANNER
DRAWING TITLE
SCHEMATIC
6900 DIGITAL
REV. C
DRAWING NO. SK502
DATE 5-1-1997_16:52
SHEET 11
DRAWN BY TD

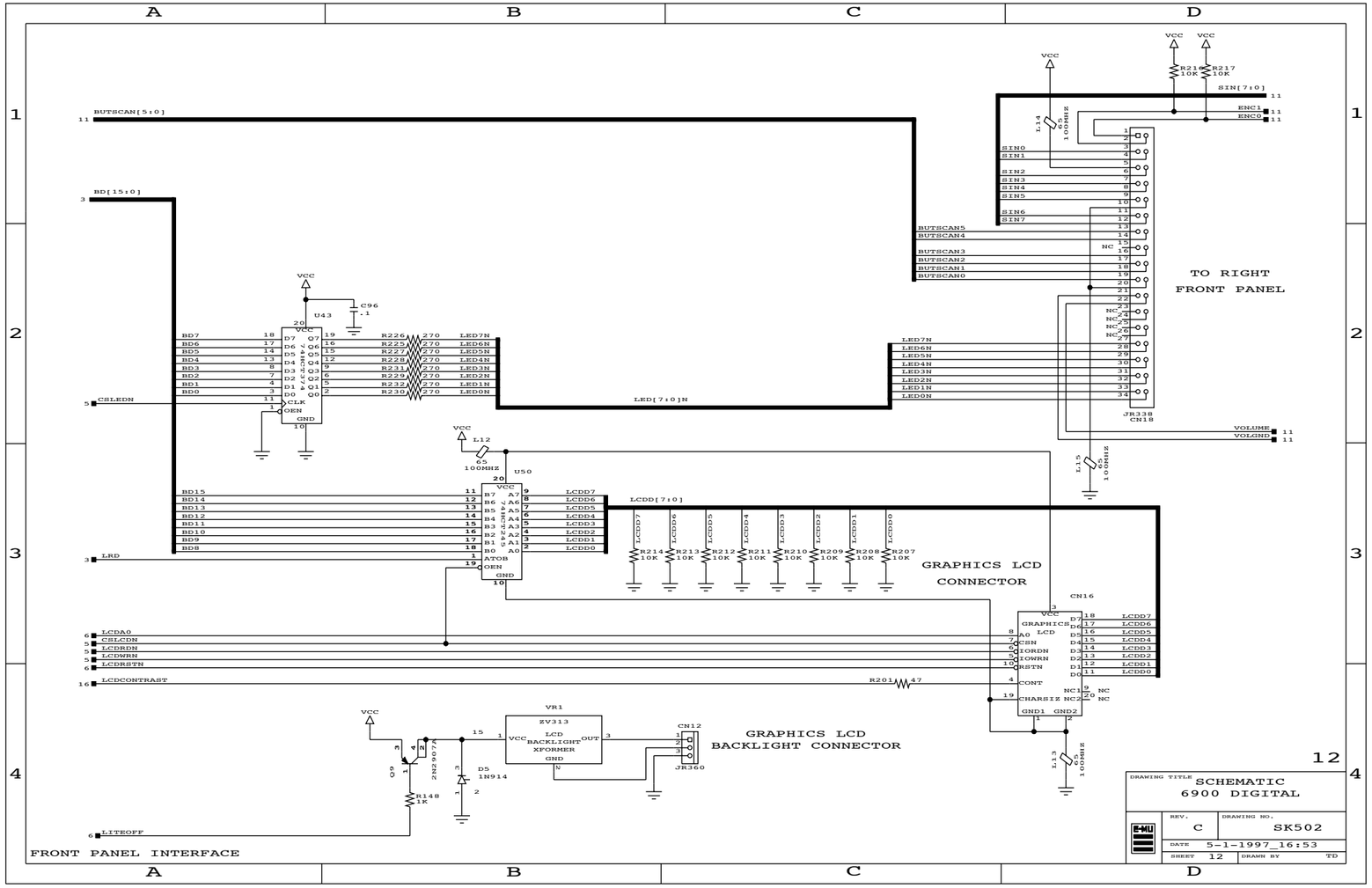

DRAWING TITLE
SCHEMATIC
6900 DIGITAL

REV. C	DRAWING NO. SK502	
DATE 5-1-1997_16:53		
SHEET 12	DRAWN BY TD	

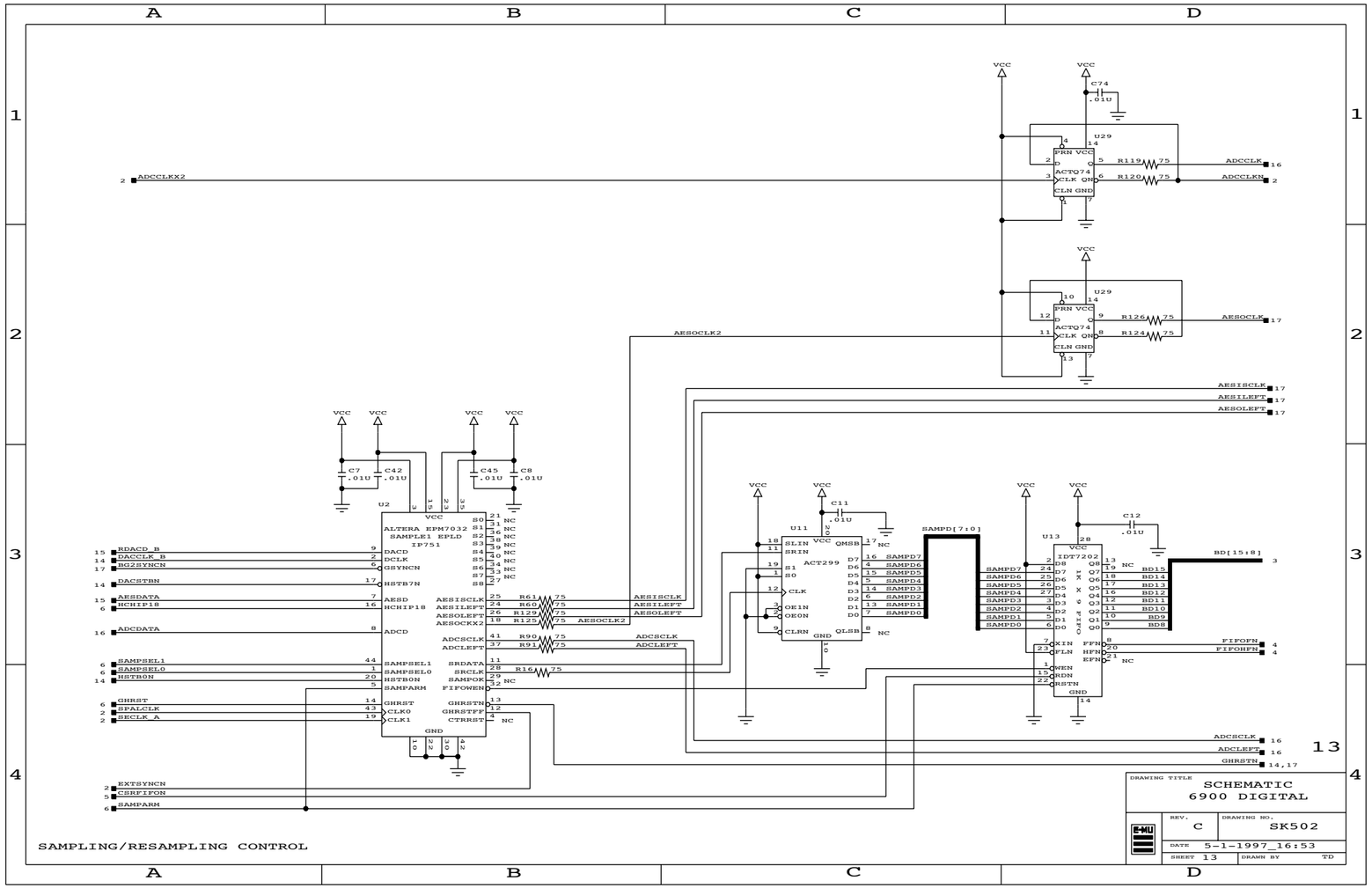

DRAWING TITLE
SCHEMATIC
6900 DIGITAL

E-MU	REV. C	DRAWING NO. SK502
	DATE 5-1-1997_16:53	
	SHEET 13	DRAWN BY TD

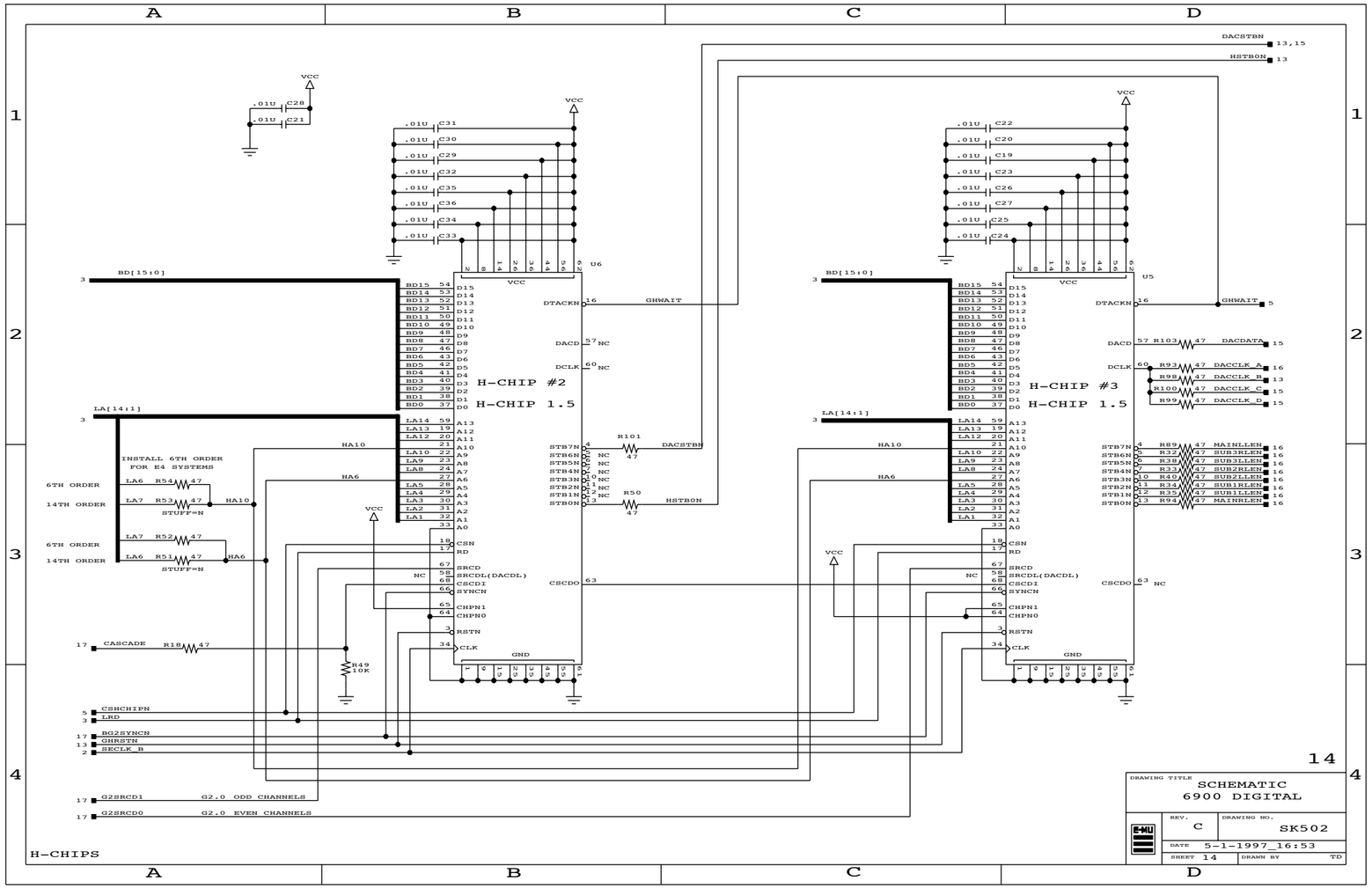

14

DRAWING TITLE
SCHEMATIC
6900 DIGITAL

E-MU	REV. C	DRAWING NO. SK502
	DATE 5-1-1997_16:53	
	SHEET 14	DRAWN BY TD

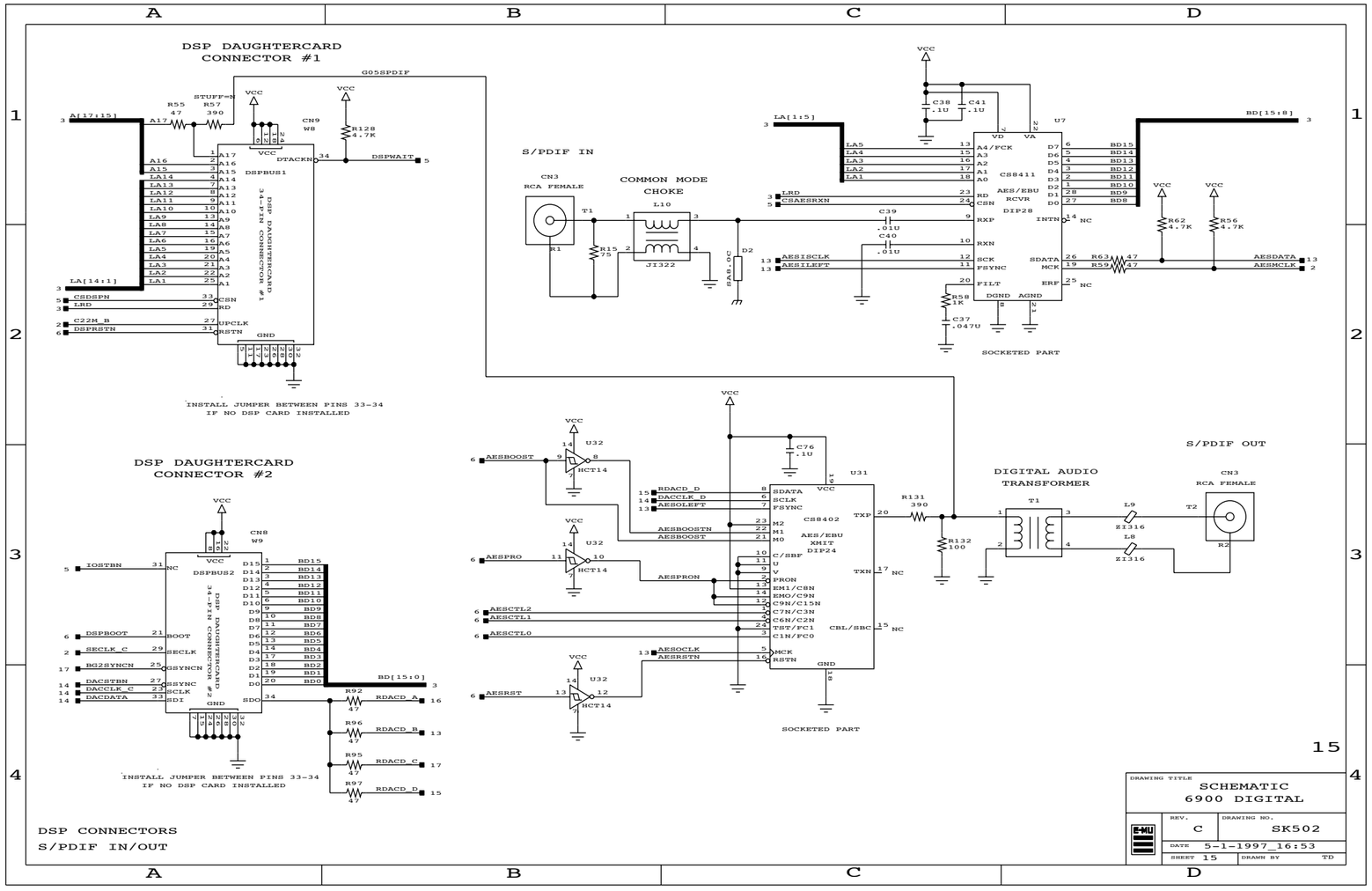

DRAWING TITLE
SCHEMATIC
6900 DIGITAL

REV.	DRAWING NO.
C	SK502
DATE 5-1-1997_16:53	
SHEET 15	DRAWN BY TD

15

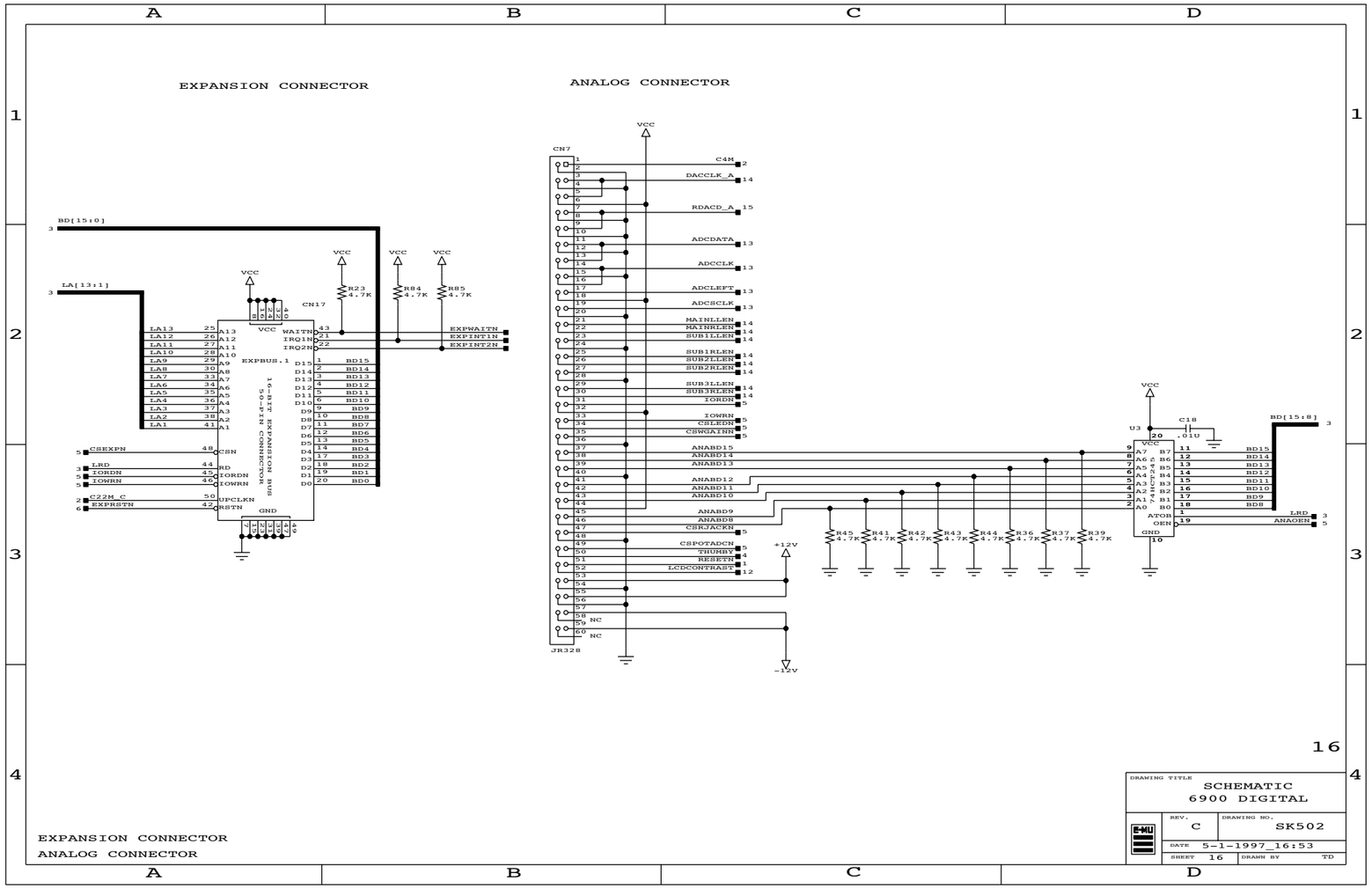

16

DRAWING TITLE	SCHEMATIC 6900 DIGITAL
REV.	C
DRAWING NO.	SK502
DATE	5-1-1997_16:53
SHEET	16
DRAWN BY	TD

EXPANSION CONNECTOR
ANALOG CONNECTOR

SCHEMATIC INDEX:

REVISIONS

ECO	REV	DESCRIPTION	DATE	APPR.
2903	A	PRODUCTION RELEASE	1/22/96	TD
3016	B	R58 TO 1K, C37 TO .047UF	8/16/96	TD
3154	C	ADDED 1MEG/2MEG STUFF TO PG. 7, ZONE D1		

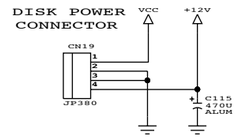

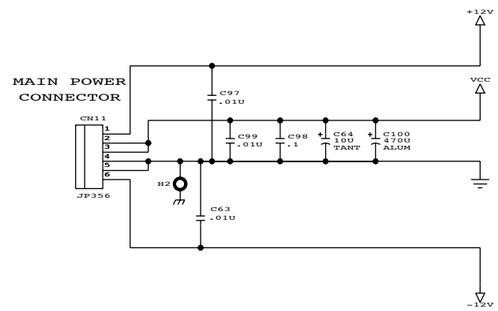

SPARES

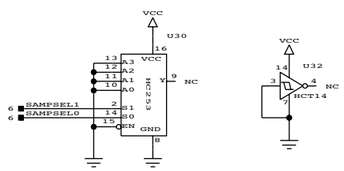

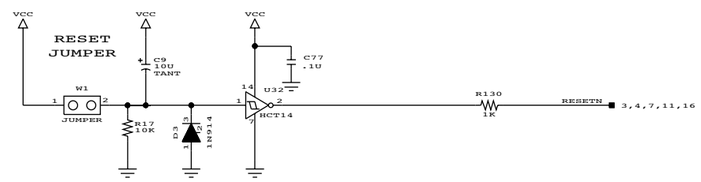

POWER-UP RESET

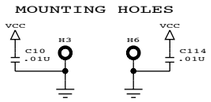

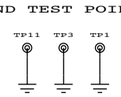

E-mu Systems, Inc.
applied magic for the arts
1600 Green Hills Road
Scotts Valley, California 95066

DRAWING TITLE: SCHEMATIC 6900 DIGITAL

REV. C | DRAWING NO. SK502

DATE 5-1-1997_16:49 | CHECK

SHEET: 1 OF 17 | DRAWN TD | APPR TD

E4 KEYBOARD DIGITAL BOARD SCHEMATICS

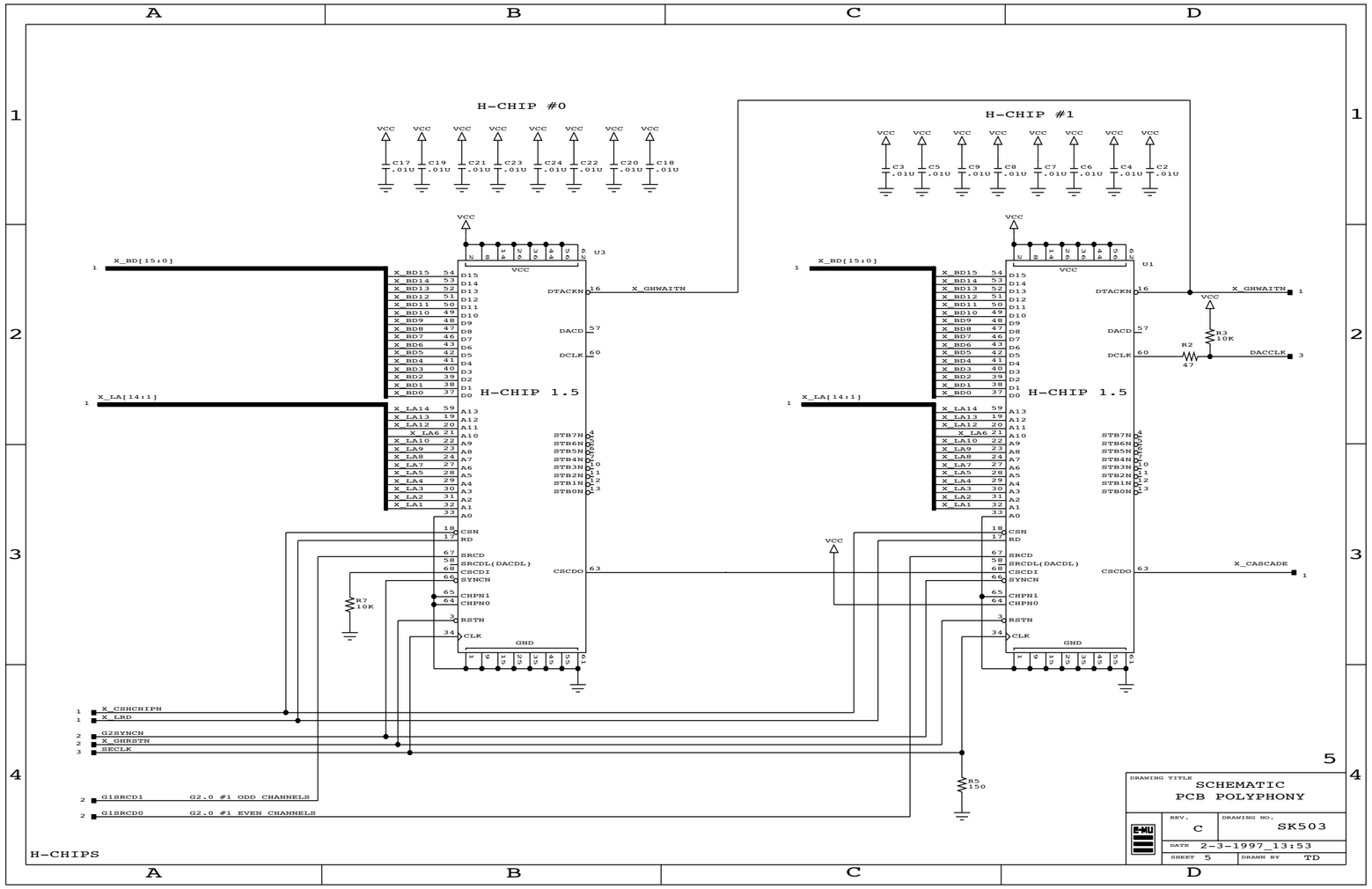
H-CHIP #0
H-CHIP #1
H-CHIP 1.5
U3
U1
X_BD[15:0]
X_LA[14:1]
X_GHWAITN
X_CASCADE
DACCLK
DTACKN
DACD
DCLK
CSCDO
CSCDI
SYNCN
CHPN1
CHPN0
RSTN
CLK
CSN
RD
SRCD
SRCDL(DACDL)
STB7N
STB6N
STB5N
STB4N
STB3N
STB2N
STB1N
STB0N
R7 10K
R3 10K
R2 47
R5 150
X_CSHCHIPN
X_LRD
G2SYNCN
X_GHRSTN
SECLK
G1SRCD1
G2.0 #1 ODD CHANNELS
G1SRCD0
G2.0 #1 EVEN CHANNELS
H-CHIPS
DRAWING TITLE
SCHEMATIC
PCB POLYPHONY
REV.
C
DRAWING NO.
SK503
DATE
2-3-1997_13:53
SHEET
5
DRAWN BY
TD

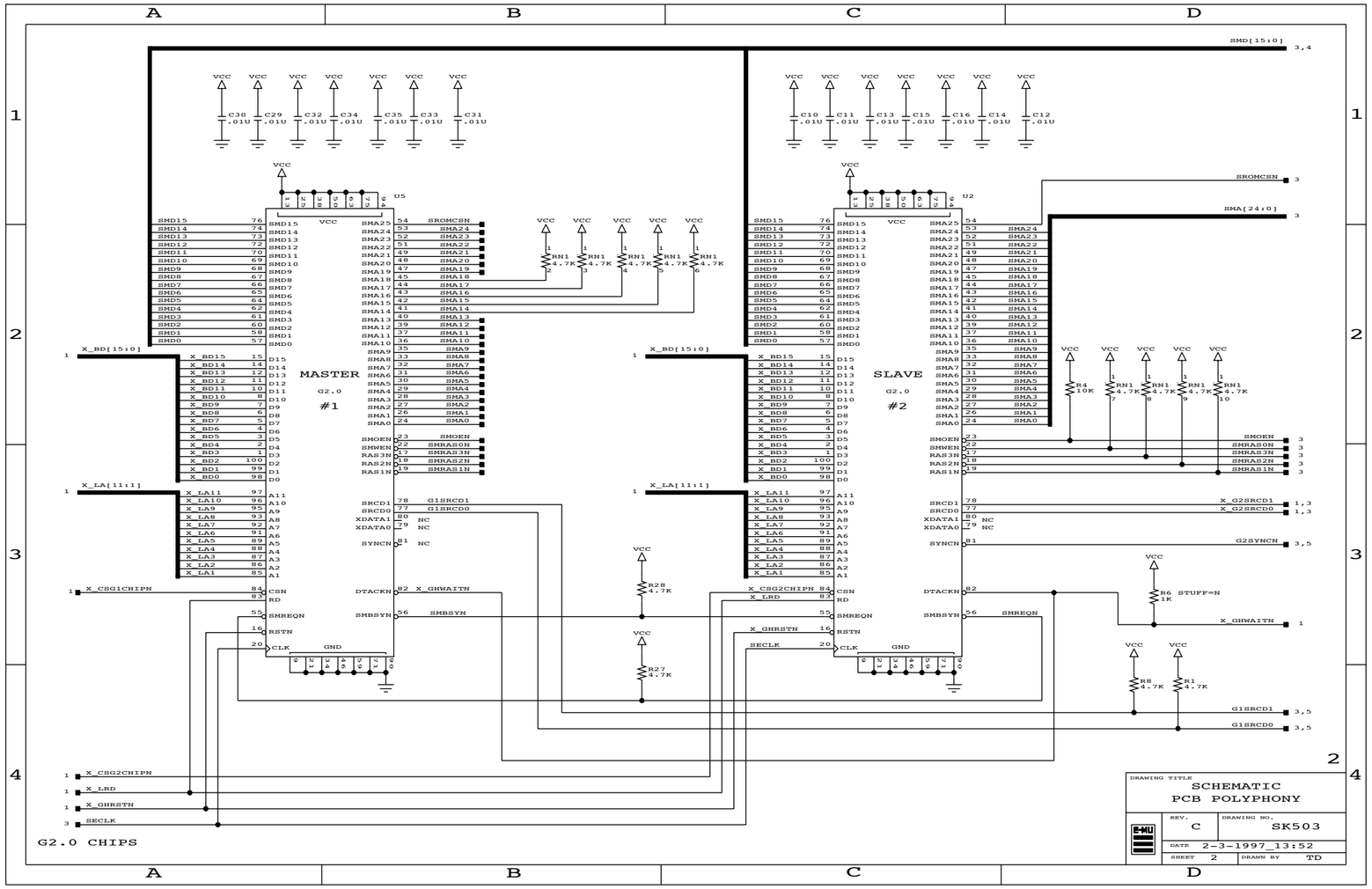

DRAWING TITLE

SCHEMATIC
PCB POLYPHONY

REV.	DRAWING NO.
C	SK503
DATE 2-3-1997_13:52	
SHEET 2	DRAWN BY TD

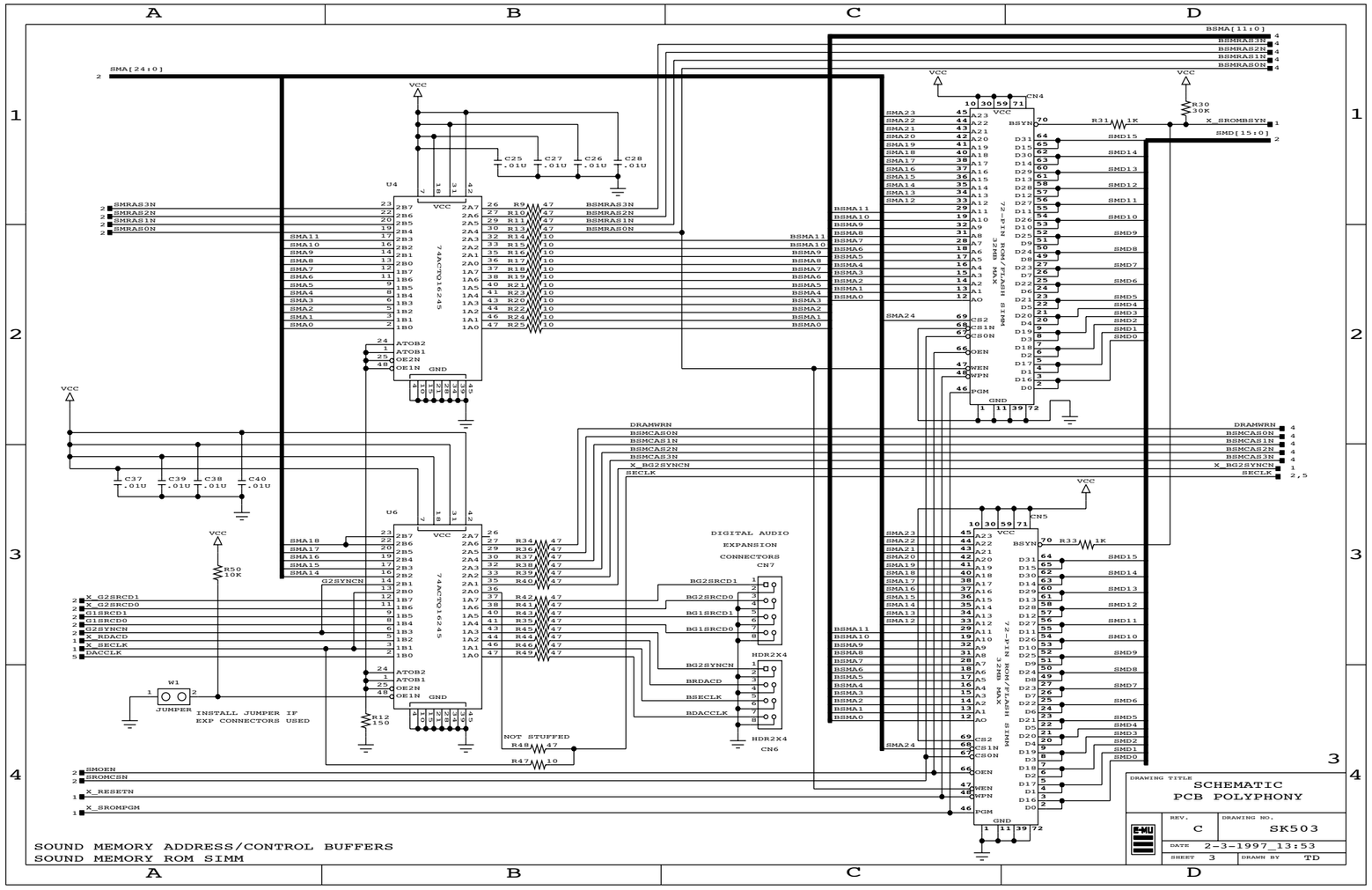
SOUND MEMORY ADDRESS/CONTROL BUFFERS
SOUND MEMORY ROM SIMM
DIGITAL AUDIO
EXPANSION
CONNECTORS
INSTALL JUMPER IF
EXP CONNECTORS USED
NOT STUFFED
74ACTQ16245
72-PIN ROM/FLASH SIMM
32MB MAX
SCHEMATIC
PCB POLYPHONY
C
SK503
2-3-1997 13:53
TD

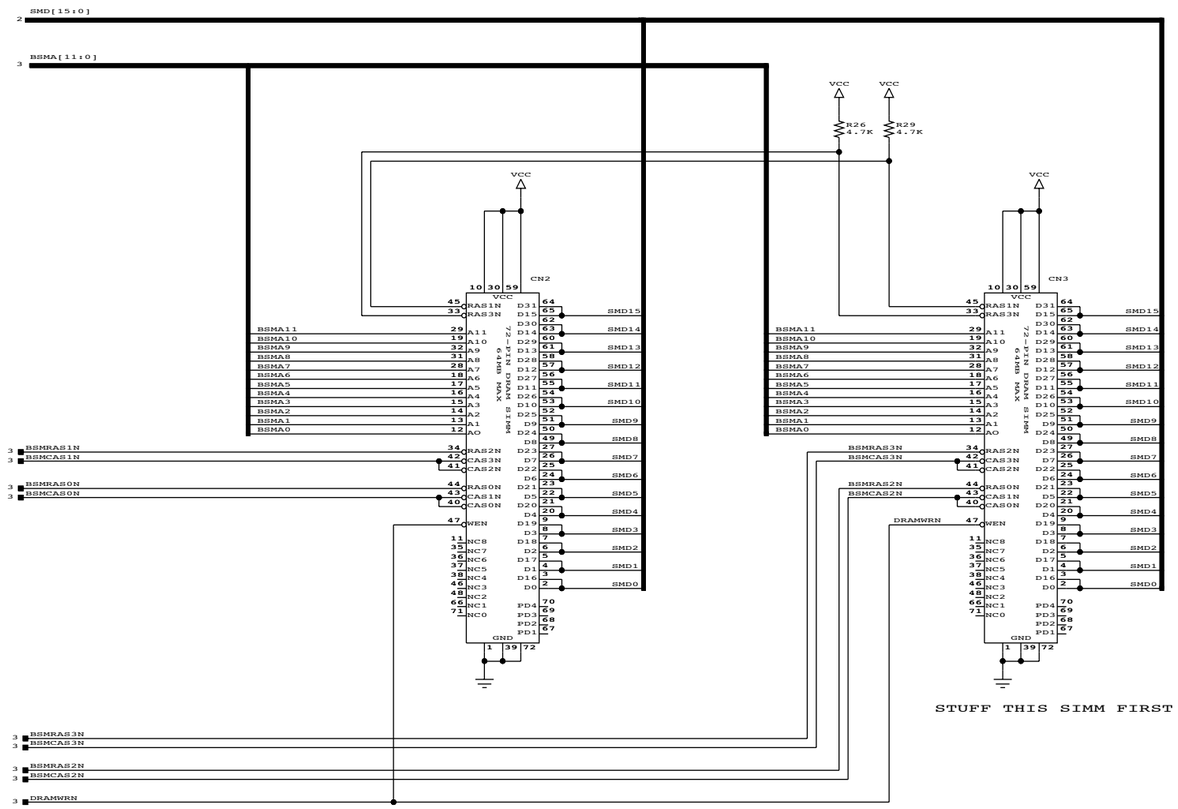

SOUND DRAM SIMM CONNECTORS

DRAWING TITLE
SCHEMATIC
PCB POLYPHONY

REV. C	DRAWING NO. SK503
DATE 2-3-1997_13:53	
SHEET 4	DRAWN BY TD

SCHEMATIC INDEX:

SHEET #	CIRCUIT FUNCTIONS
1	CONNECTORS TO DIGITAL BOARD
2	G2.0 CHIPS
3	SOUND MEMORY ADDRESS/CONTROL BUFFERS, SOUND ROM SIMM
4	SOUND DRAM
5	H-CHIPS 0 & 1

REVISIONS

ECO	REV	DESCRIPTION	DATE	APPR.
2899	A	PRODUCTION RELEASE	1/9/96	TD
3016	B	R14-R25 REDUCED TO 10 OHMS	8/16/96	TD
3117	C	SHT 3- REMOVE R32, REROUTE TRACE ZONE B2.		

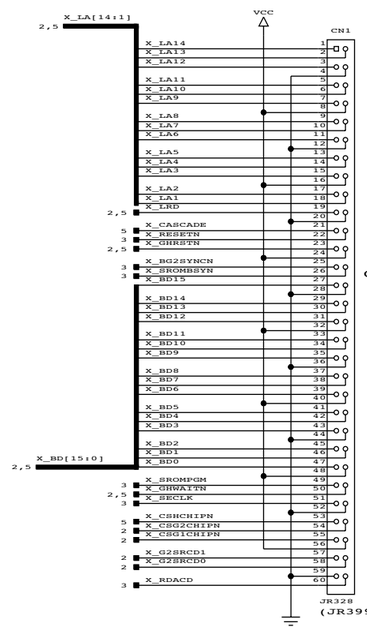

CONNECTORS TO DIGITAL BOARD

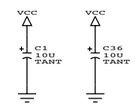

GND TEST POINT

E-mu Systems, Inc.
applied magic for the arts
1600 Green Hills Road
Scotts Valley, California 95066

DRAWING TITLE: SCHEMATIC PCB POLYPHONY

REV. C | DRAWING NO. SK503

DATE 2-3-1997 13:52 | CHECK

SHEET: 1 OF 5 | DRAWN | APPR TD

E4K/E4X/E6400 POLYPHONY BOARD SCHEMATICS

SCHEMATIC INDEX:

SHEET #	CIRCUIT FUNCTIONS
1	REGULATORS, CONNECTOR TO DIGITAL BOARD
2	WRITE LATCHES
3	FOOT SWITCHES, READ LATCH, PANEL CONNECTORS
4	ANALOG SAMPLING
5	CONTROLLERS A/D, PRESSURE CIRCUIT
6	MAIN AUDIO OUTS
7	SUB AUDIO OUT PAIR 1
8	SUB AUDIO OUT PAIR 2
9	SUB AUDIO OUT PAIR 3

REVISIONS

ECO	REV	DESCRIPTION	DATE	APPR.
2900	A	PRODUCTION RELEASE	1/15/96	TD
3324	B	SWAP REFDES R191 & R192	4/28/98	TD
3433	C	ADD C500 PAGE 2		

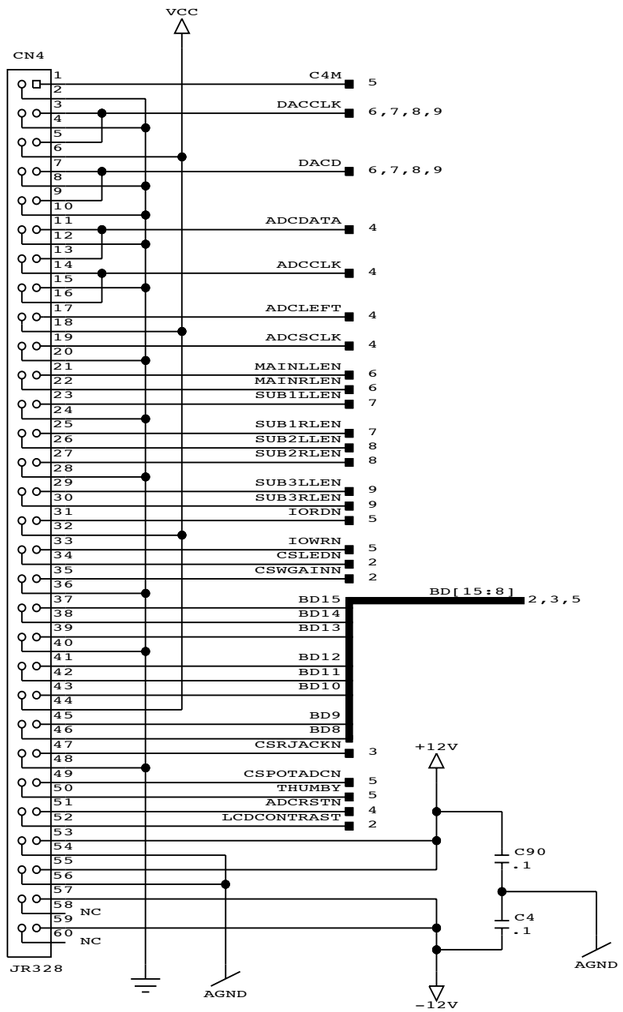

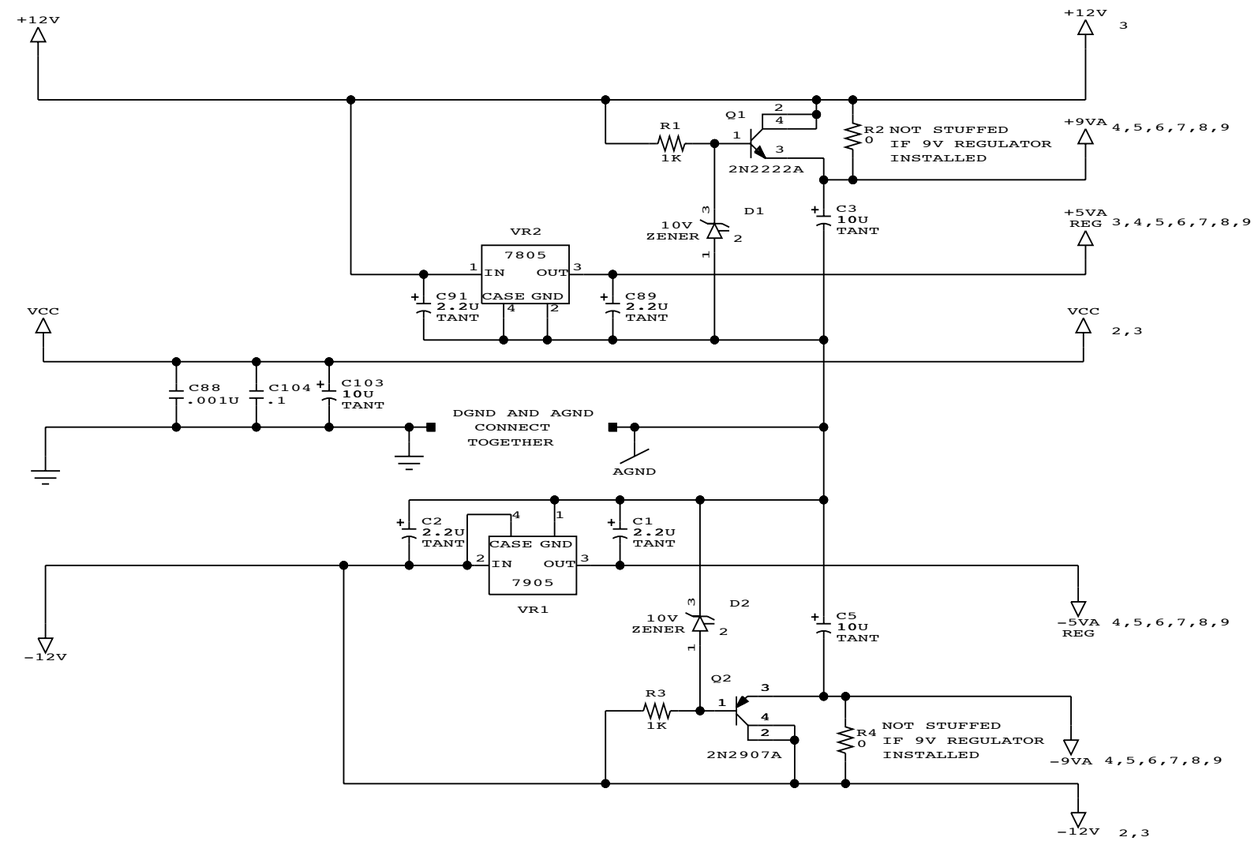

MOUNTING HOLES

GND TEST POINTS

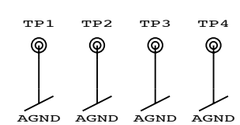

1

E-mu Systems, Inc.
applied magic for the arts
1600 Green Hills Road
Scotts Valley, California 95066

DRAWING TITLE: SCHEMATIC ANALOG 6900

REV. C | DRAWING NO. SK501

DATE 3-29-1999_11:56 | CHECK

SHEET: 1 OF 9 | DRAWN TD | APPR TD

E4 KEYBOARD ANALOG BOARD SCHEMATICS

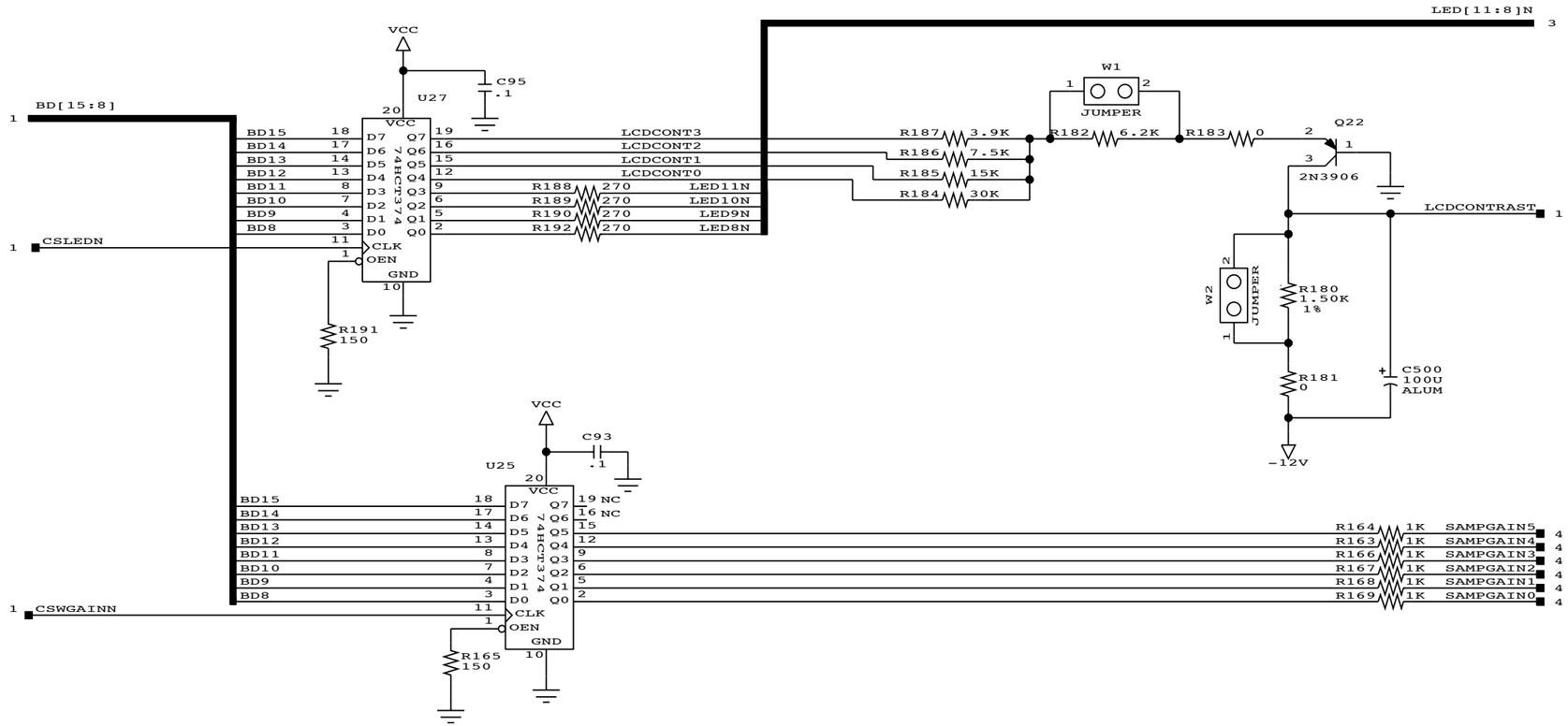

FRONT PANEL INTERFACE
SAMPLE GAIN LATCH

2

DRAWING TITLE
SCHEMATIC
ANALOG 6900

REV. C	DRAWING NO. SK501
DATE 4-19-1999_17:21	
SHEET 2	DRAWN BY TD

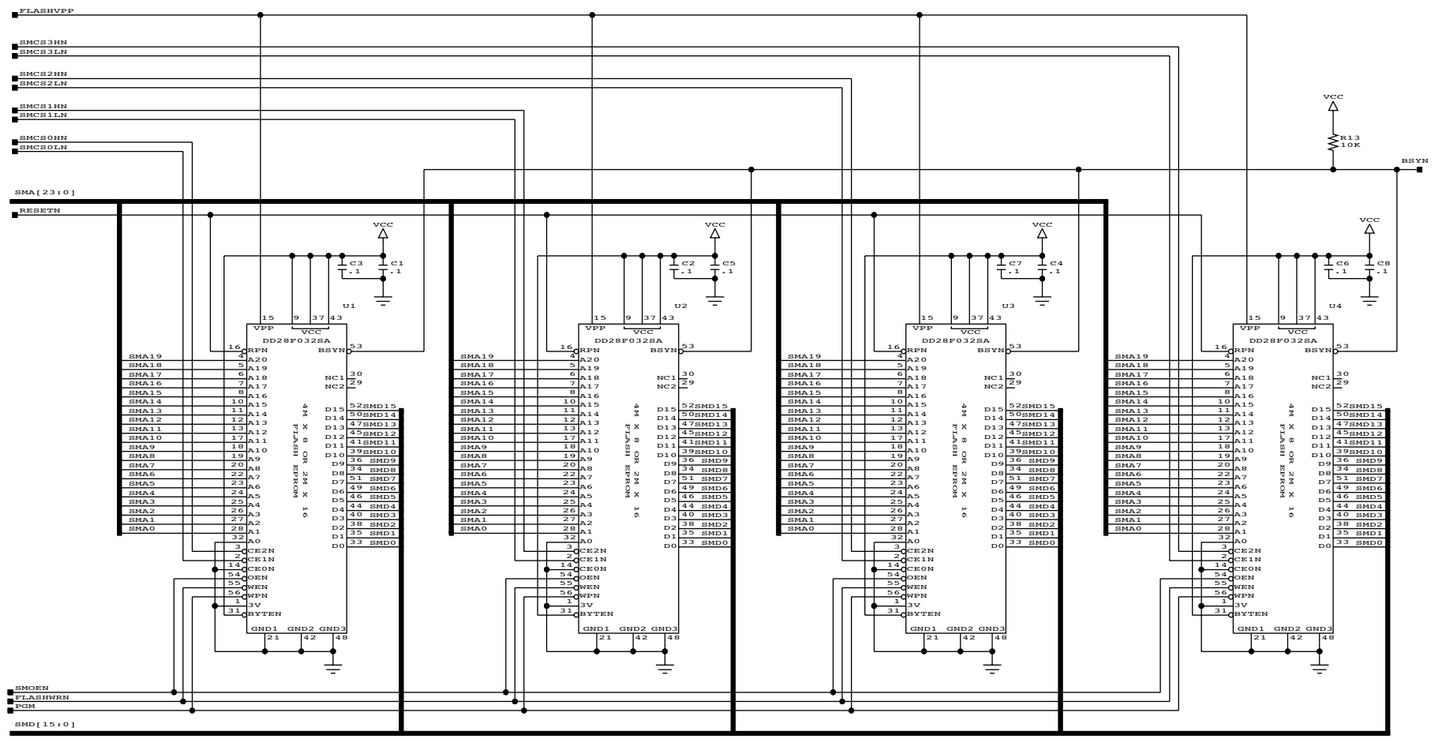

G2.0 CHIP ADDRESS RANGE (WORDS)

28F016 (1M x 16) PARTS: 000000 - 0FFFFF 100000 - 1FFFFF 200000 - 2FFFFF 300000 - 3FFFFF

28F032 (2M x 16) PARTS: 000000 - 1FFFFF 200000 - 3FFFFF 400000 - 5FFFFF 600000 - 7FFFFF

INSTALL FOUR DD28F016SA FLASH EPROMS FOR 4M X 16 (8 MB) OF MEMORY

INSTALL FOUR DD28F032SA FLASH EPROMS FOR 8M X 16 (16 MB) OF MEMORY

2

DRAWING TITLE: 16MB SOUND FLASH SIMM FOR E4K/EKX PRODUCTS

REV.	DRAWING NO.
A	SK528

DATE 8-28-1997 10:39

SHEET 2 DRAWN BY TD

REVISIONS				
ECO	REV	DESCRIPTION	DATE	APPR.
3198	A	PRODUCTION RELEASE		

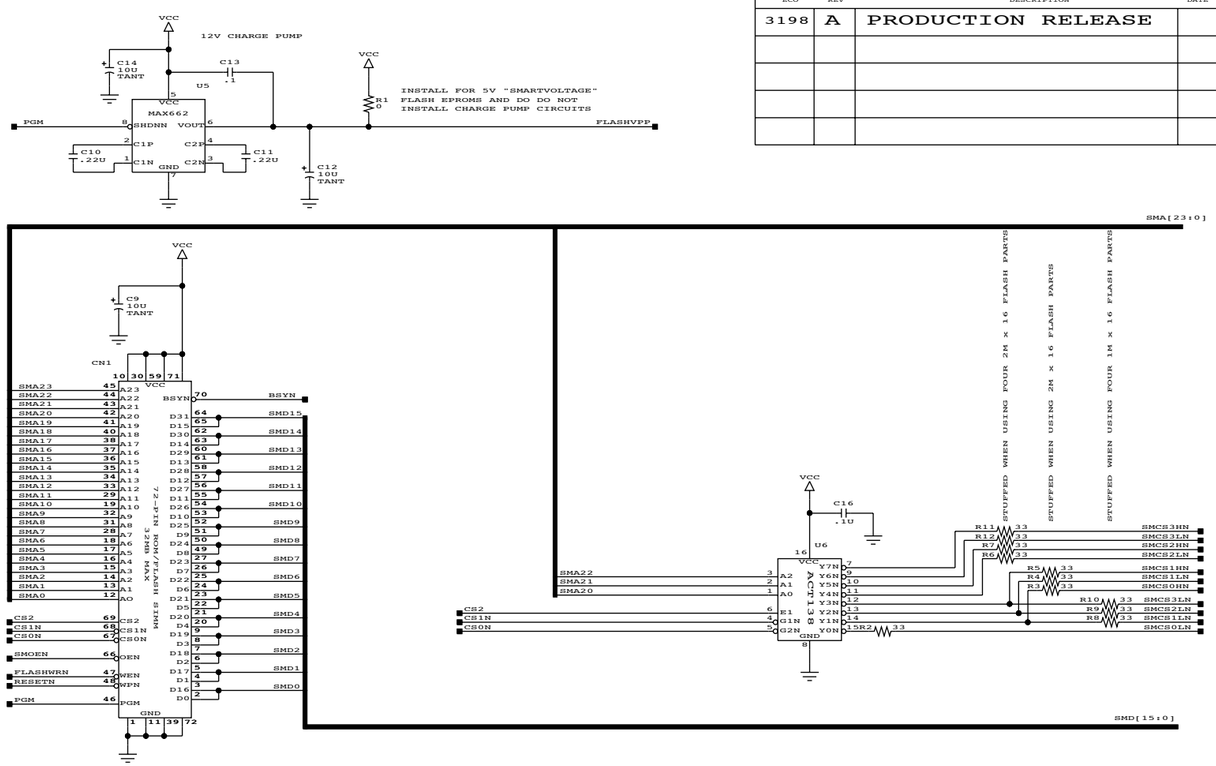

E-mu Systems, Inc.
applied magic for the arts
1600 Green Hills Road
Scotts Valley, California 95066

DRAWING TITLE
16MB SOUND FLASH SIMM
FOR E4K/E4X PRODUCTS

REV.	DRAWING NO.
A	SK528

DATE	CHECK
8-28-1997 10:39	

SHEET: 1 OF 2	DRAWN	APPR TD

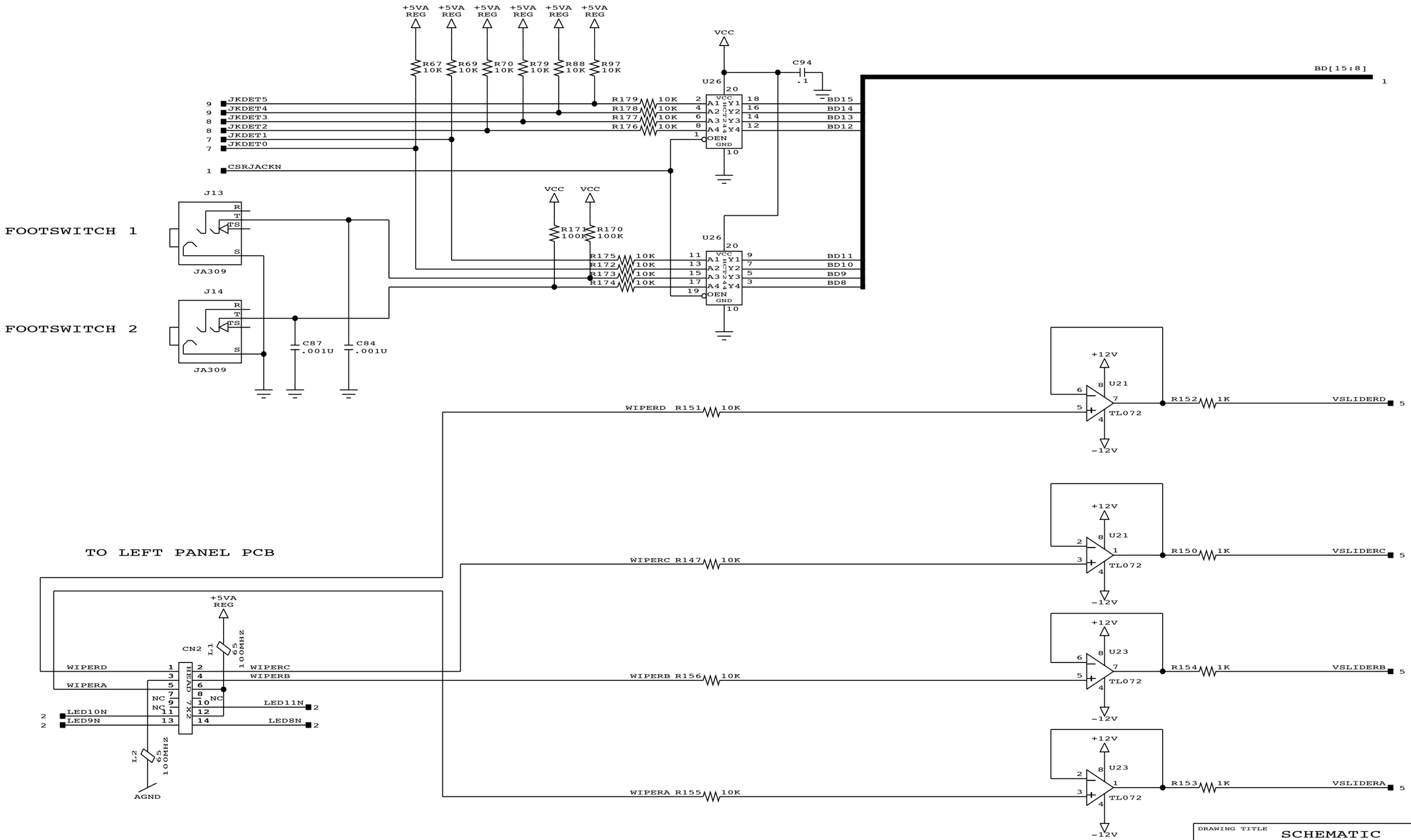

FOOTSWITCHES, PEDAL
JACK DETECT LATCH
PANEL CONNECTOR

DRAWING TITLE
SCHEMATIC
ANALOG 6900

REV.	DRAWING NO.
C	SK501
DATE 3-29-1999_11:50	
SHEET 3	DRAWN BY TD

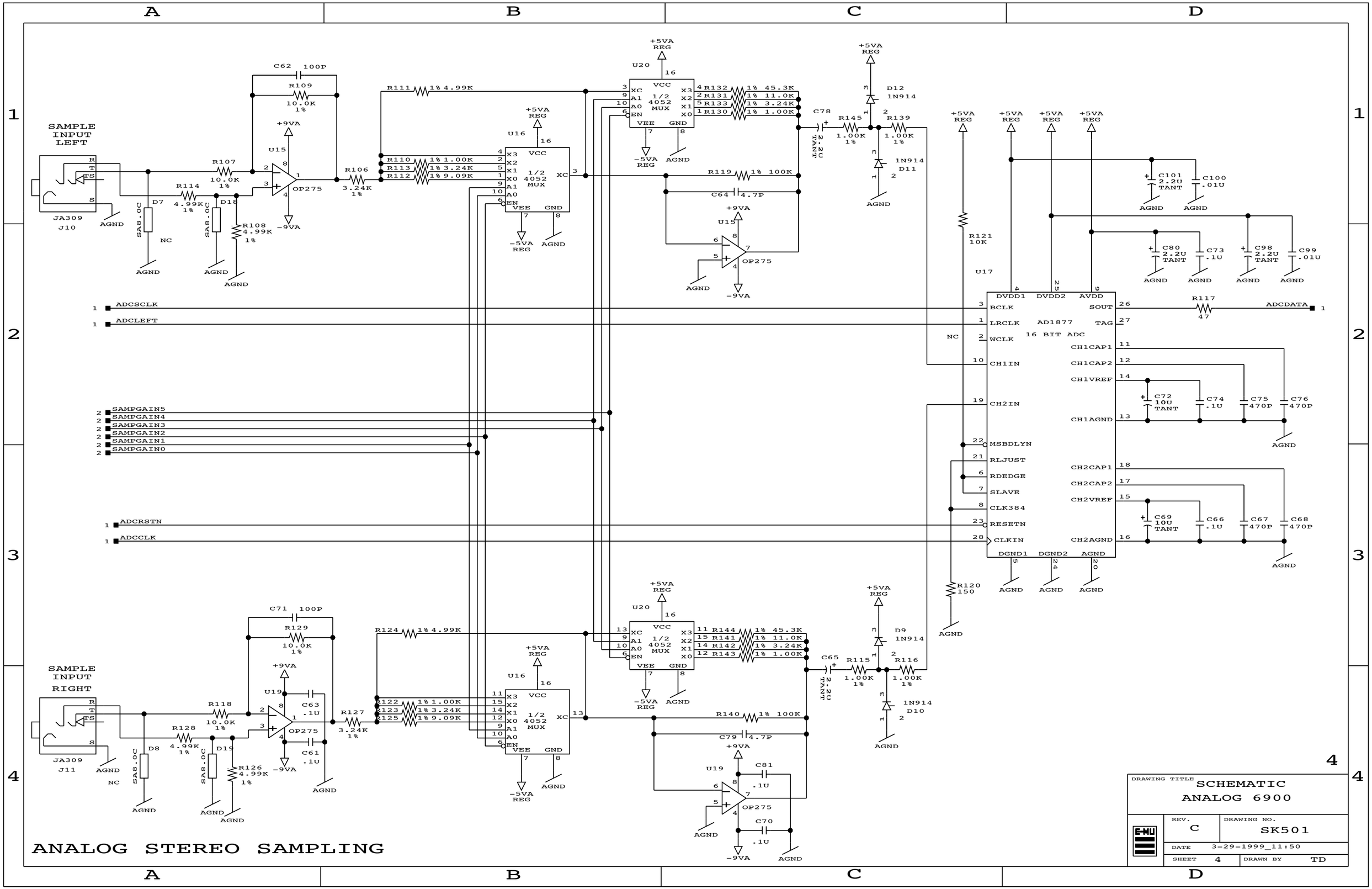
SAMPLE INPUT LEFT
JA309
J10
SAMPLE INPUT RIGHT
JA309
J11
OP275
U15
U16
U19
U20
1/2 4052 MUX
VCC
VEE
GND
+5VA REG
-5VA REG
+9VA
-9VA
AGND
NC
SA8.0C
D7
D8
D18
D19
D11
D12
D9
D10
1N914
R107 10.0K 1%
R108 4.99K 1%
R109 10.0K 1%
R110 1% 1.00K
R111 1% 4.99K
R112 1% 9.09K
R113 1% 3.24K
R114 4.99K 1%
R115 1.00K 1%
R116 1.00K 1%
R117 47
R118 10.0K 1%
R119 1% 100K
R120 150
R121 10K
R123 1% 3.24K
R124 1% 4.99K
R125 1% 9.09K
R126 4.99K 1%
R127 3.24K 1%
R128 4.99K 1%
R129 10.0K 1%
R130 1% 1.00K
R131 1% 11.0K
R132 1% 45.3K
R133 1% 3.24K
R139 1.00K 1%
R140 1% 100K
R141 1% 11.0K
R142 1% 3.24K
R143 1% 1.00K
R144 1% 45.3K
R145 1.00K 1%
C61 .1U
C62 100P
C63 .1U
C64 4.7P
C65 2.2U TANT
C70 .1U
C71 100P
C78 2.2U TANT
C79 4.7P
C81 .1U
ADCSCLK
ADCLEFT
ADCRSTN
ADCCLK
ADCDATA
SAMPGAIN5
SAMPGAIN4
SAMPGAIN3
SAMPGAIN2
SAMPGAIN1
SAMPGAIN0
AD1877
16 BIT ADC
DVDD1
DVDD2
AVDD
BCLK
LRCLK
WCLK
CH1IN
CH2IN
MSBDLYN
RLJUST
RDEDGE
SLAVE
CLK384
RESETN
CLKIN
SOUT
TAG
CH1CAP1
CH1CAP2
CH1VREF
CH1AGND
CH2CAP1
CH2CAP2
CH2VREF
CH2AGND
DGND1
DGND2
AGND
C100 .01U
C101 2.2U TANT
C66 .1U
C67 470P
C68 470P
C69 10U TANT
C72 10U TANT
C73 .1U
C74 .1U
C75 470P
C76 470P
C80 2.2U TANT
C98 2.2U TANT
C99 .01U
ANALOG STEREO SAMPLING
DRAWING TITLE
SCHEMATIC
ANALOG 6900
E-MU
REV.
C
DRAWING NO.
SK501
DATE
3-29-1999_11:50
SHEET
4
DRAWN BY
TD

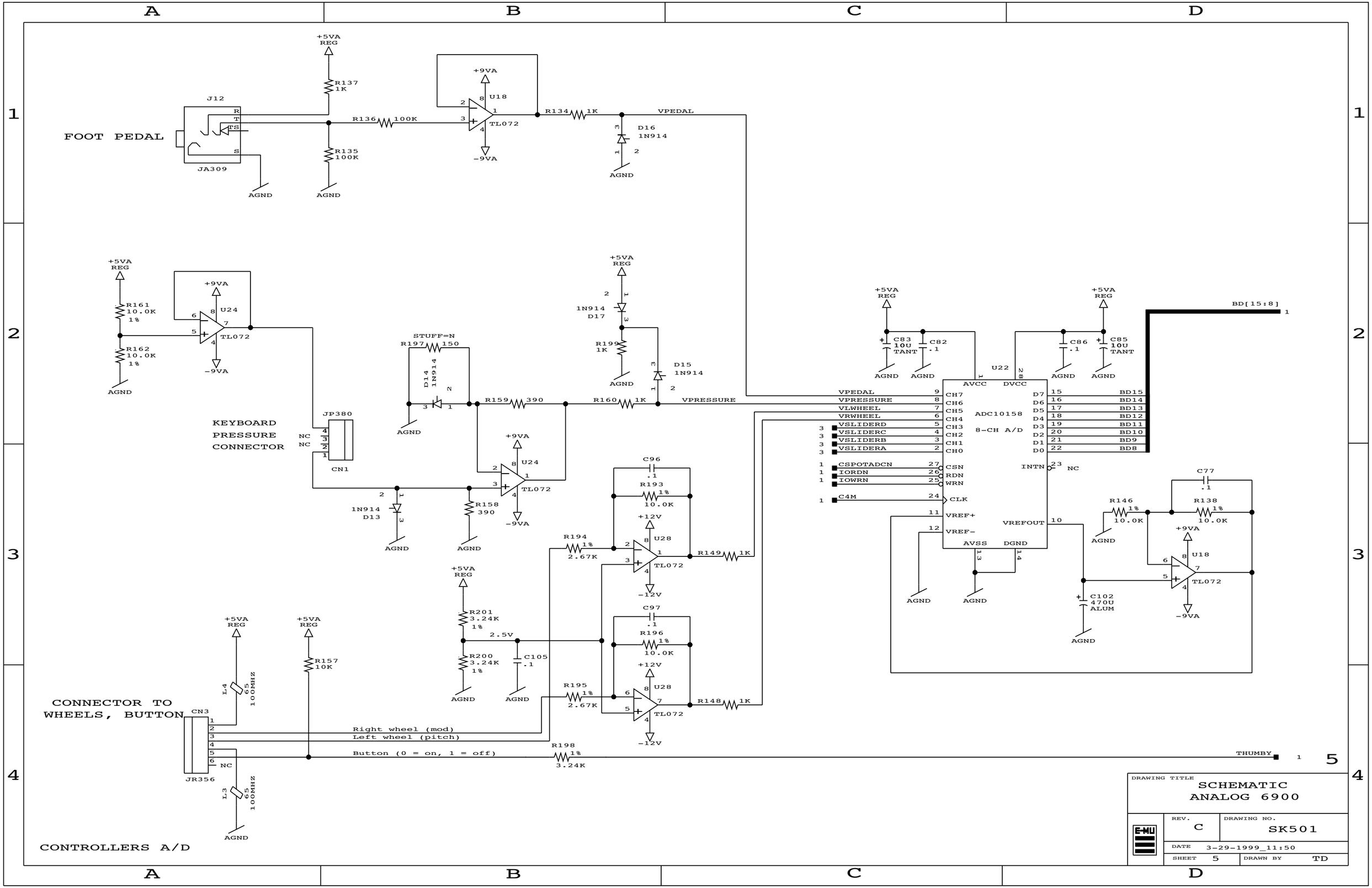
FOOT PEDAL
J12
JA309
R137 1K
R135 100K
R136 100K
U18 TL072
R134 1K
D16 1N914
VPEDAL
AGND
+5VA REG
+9VA
-9VA
R161 10.0K 1%
R162 10.0K 1%
U24 TL072
KEYBOARD PRESSURE CONNECTOR
JP380
CN1
NC
STUFF=N
R197 150
D14 1N914
R159 390
R160 1K
VPRESSURE
D17 1N914
R199 1K
D15 1N914
R158 390
D13 1N914
C96 .1
R193 1% 10.0K
U28 TL072
+12V
-12V
R194 1% 2.67K
R149 1K
R201 3.24K 1%
R200 3.24K 1%
2.5V
C105 .1
C97 .1
R196 1% 10.0K
R195 1% 2.67K
R148 1K
R157 10K
L4 65 100MHZ
L3 65 100MHZ
CONNECTOR TO WHEELS, BUTTON
CN3
JR356
Right wheel (mod)
Left wheel (pitch)
Button (0 = on, 1 = off)
R198 1% 3.24K
THUMBY
CONTROLLERS A/D
C83 10U TANT
C82 .1
C86 .1
C85 10U TANT
U22
ADC10158
8-CH A/D
AVCC
DVCC
VPEDAL
VPRESSURE
VLWHEEL
VRWHEEL
VSLIDERD
VSLIDERC
VSLIDERB
VSLIDERA
CSPOTADCN
IORDN
IOWRN
C4M
CH7
CH6
CH5
CH4
CH3
CH2
CH1
CH0
CSN
RDN
WRN
CLK
VREF+
VREF-
AVSS
DGND
VREFOUT
INTN
NC
D7
D6
D5
D4
D3
D2
D1
D0
BD[15:8]
BD15
BD14
BD13
BD12
BD11
BD10
BD9
BD8
C77 .1
R146 1% 10.0K
R138 1% 10.0K
C102 470U ALUM
DRAWING TITLE
SCHEMATIC
ANALOG 6900
REV. C
DRAWING NO. SK501
DATE 3-29-1999_11:50
SHEET 5
DRAWN BY TD
E-MU

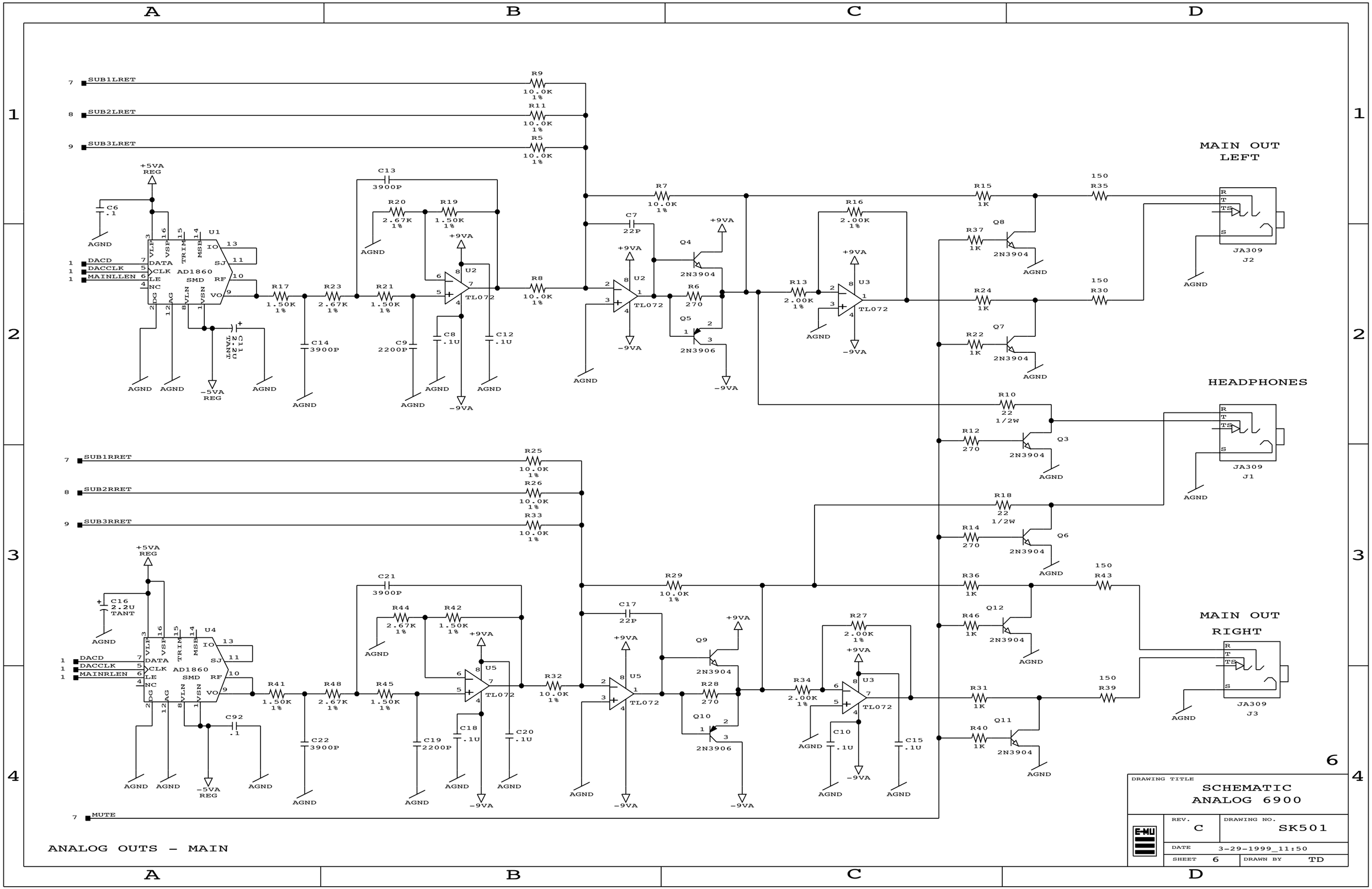
SUB1LRET
SUB2LRET
SUB3LRET
R9 10.0K 1%
R11 10.0K 1%
R5 10.0K 1%
+5VA REG
C6 .1
AGND
DACD
DACCLK
MAINLLEN
DATA
CLK
LE
AD1860
SMD
RF
VO
U1
IO
SJ
VLP
VSP
TRIM
MSB
DG
AG
VLN
VSN
C11 2.2U TANT
-5VA REG
R17 1.50K 1%
R23 2.67K 1%
C14 3900P
C13 3900P
R20 2.67K 1%
R19 1.50K 1%
R21 1.50K 1%
C9 2200P
C8 .1U
C12 .1U
U2
TL072
+9VA
-9VA
R8 10.0K 1%
R7 10.0K 1%
C7 22P
Q4 2N3904
R6 270
Q5 2N3906
R13 2.00K 1%
R16 2.00K 1%
U3
R15 1K
R37 1K
Q8 2N3904
R24 1K
R22 1K
Q7 2N3904
150 R35
150 R30
MAIN OUT LEFT
JA309 J2
R10 22 1/2W
R12 270
Q3 2N3904
HEADPHONES
JA309 J1
R18 22 1/2W
R14 270
Q6 2N3904
SUB1RRET
SUB2RRET
SUB3RRET
R25 10.0K 1%
R26 10.0K 1%
R33 10.0K 1%
C16 2.2U TANT
U4
C92 .1
R41 1.50K 1%
R48 2.67K 1%
C22 3900P
C21 3900P
R44 2.67K 1%
R42 1.50K 1%
R45 1.50K 1%
C19 2200P
C18 .1U
C20 .1U
U5
R32 10.0K 1%
R29 10.0K 1%
C17 22P
Q9 2N3904
R28 270
Q10 2N3906
R34 2.00K 1%
R27 2.00K 1%
C10 .1U
C15 .1U
R36 1K
R46 1K
Q12 2N3904
R31 1K
R40 1K
Q11 2N3904
150 R43
150 R39
MAIN OUT RIGHT
JA309 J3
MUTE
ANALOG OUTS - MAIN
DRAWING TITLE
SCHEMATIC
ANALOG 6900
REV. C
DRAWING NO. SK501
DATE 3-29-1999_11:50
SHEET 6
DRAWN BY TD
E-MU

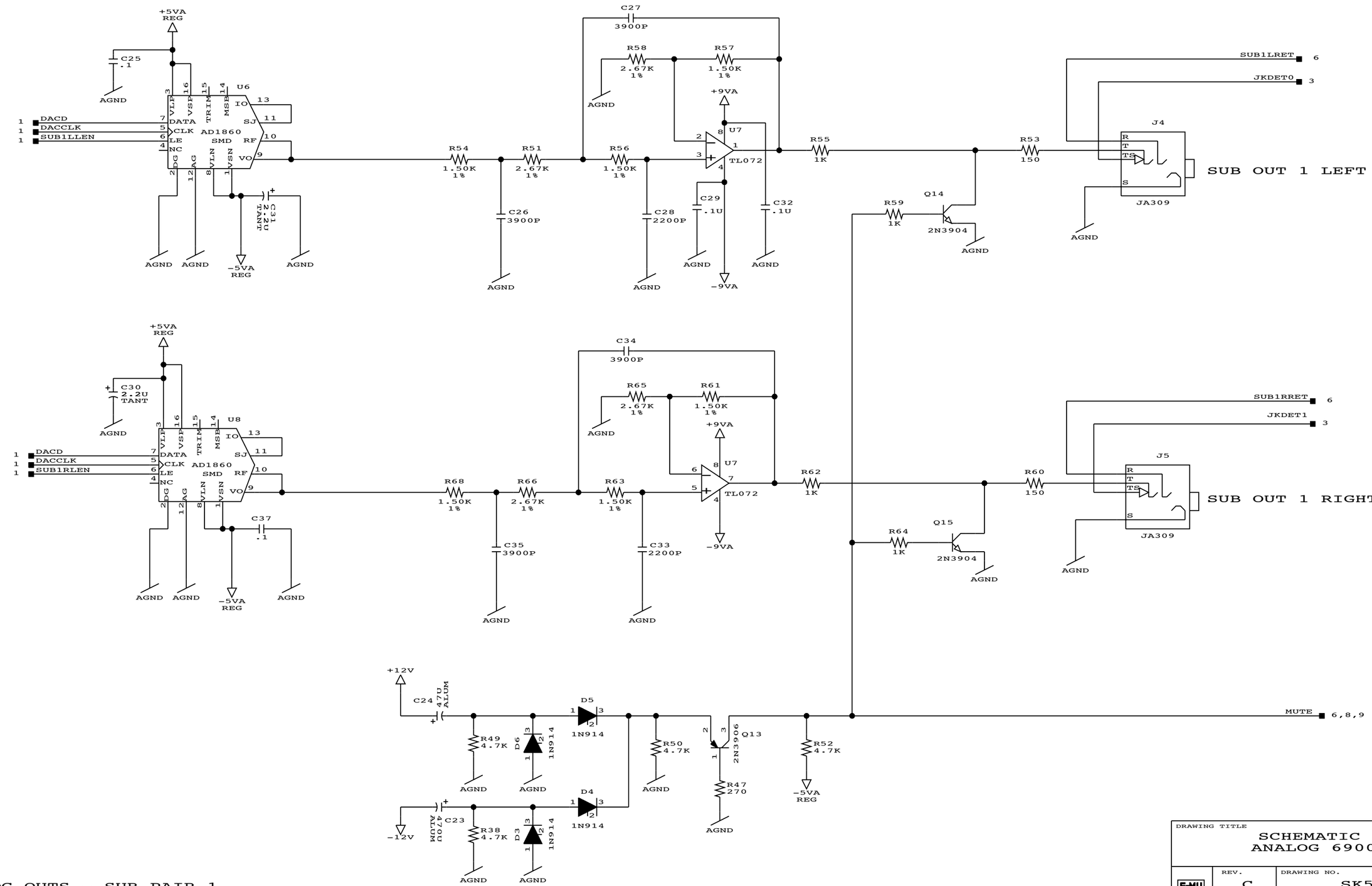

ANALOG OUTS - SUB PAIR 1
DEPOP CIRCUIT

7

DRAWING TITLE
SCHEMATIC
ANALOG 6900

E-MU	REV. C	DRAWING NO. SK501
	DATE 3-29-1999_11:50	
	SHEET 7	DRAWN BY TD

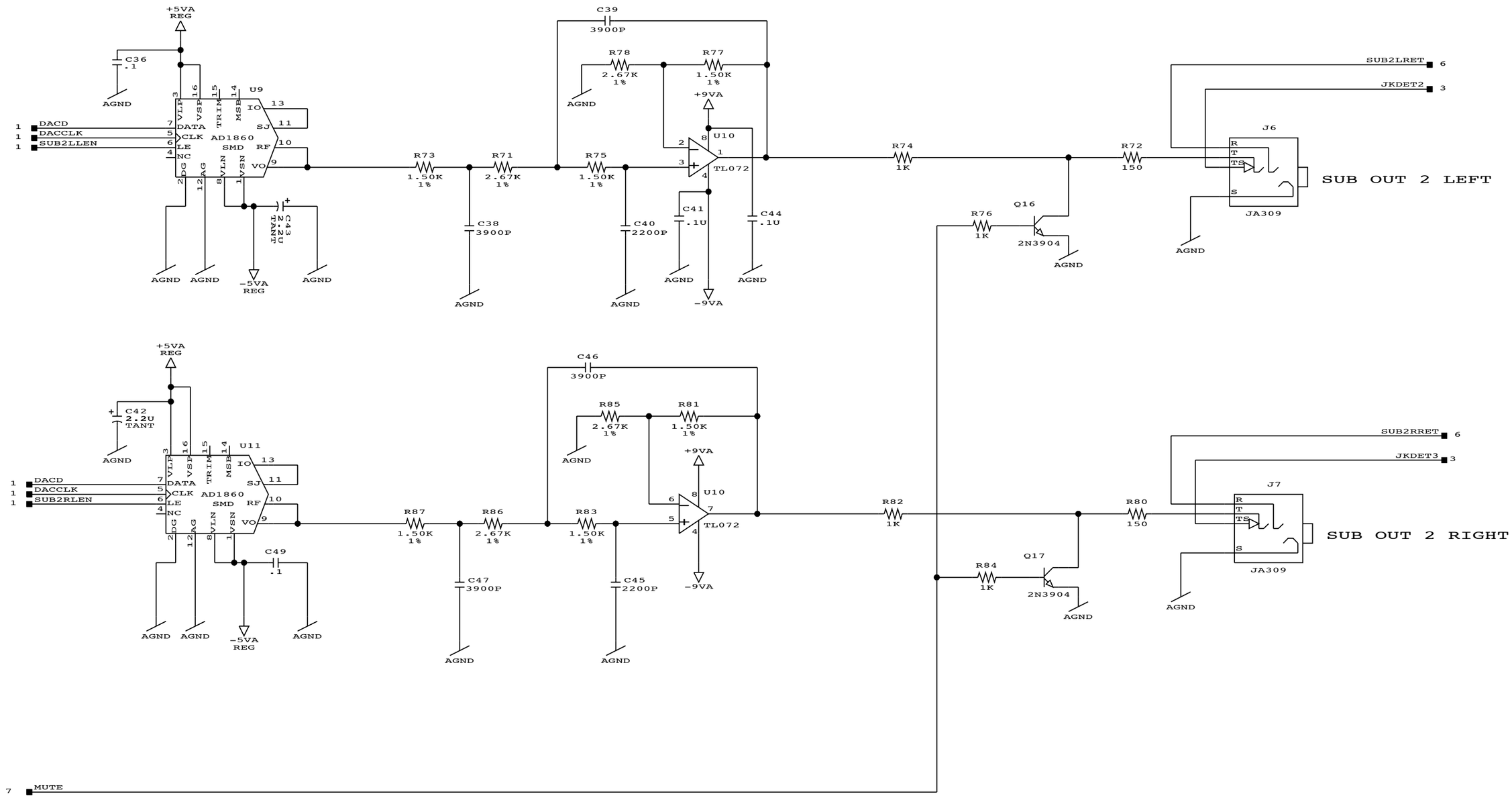

ANALOG OUTS - SUB PAIR 2

8

DRAWING TITLE
SCHEMATIC
ANALOG 6900

E-MU	REV. C	DRAWING NO. SK501
	DATE 3-29-1999_11:50	
	SHEET 8	DRAWN BY TD

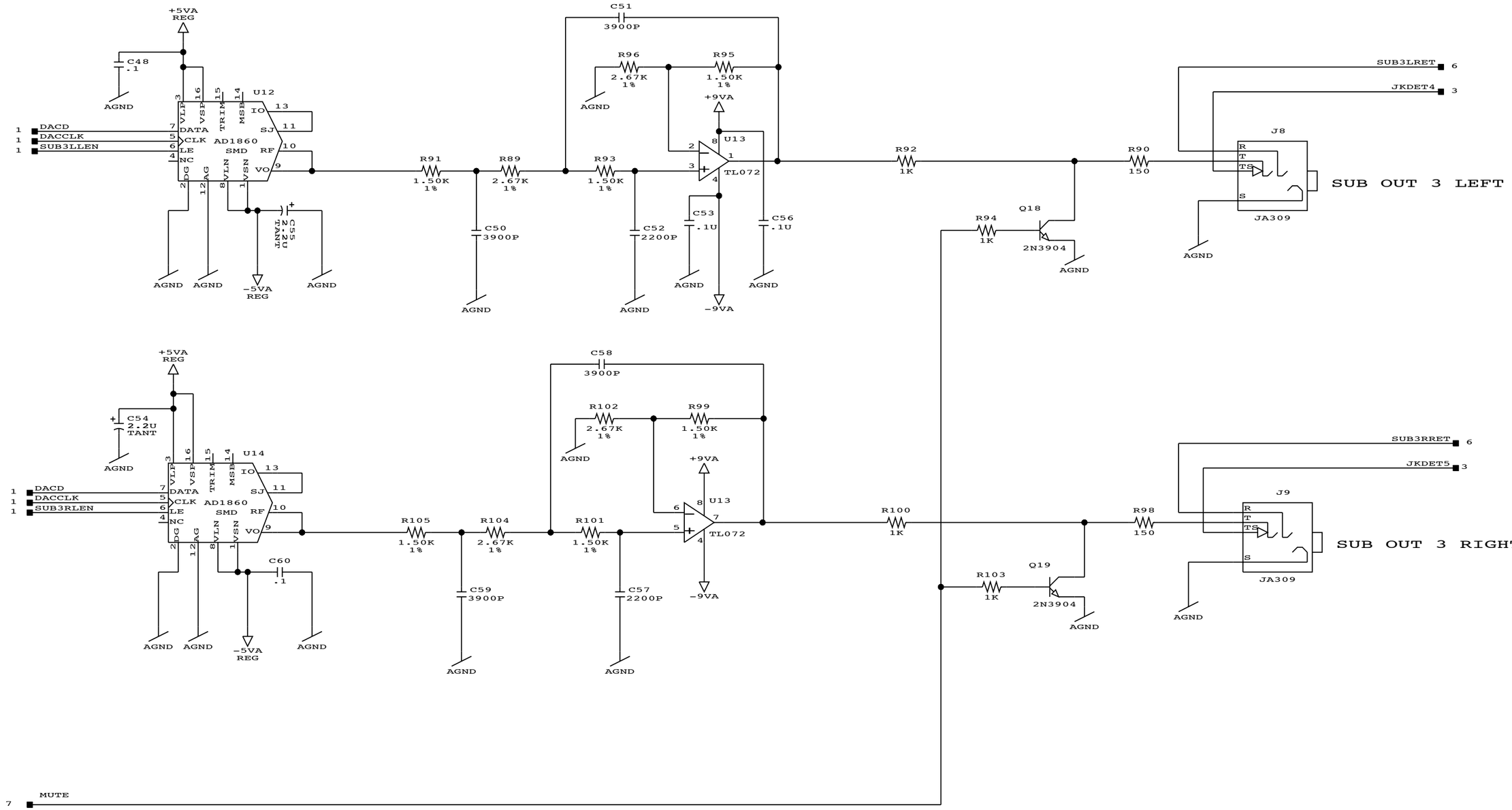

9

DRAWING TITLE

SCHEMATIC
ANALOG 6900

E-MU	REV. C	DRAWING NO. SK501
	DATE 3-29-1999_11:51	
	SHEET 9	DRAWN BY TD

ANALOG OUTS – SUB PAIR 3

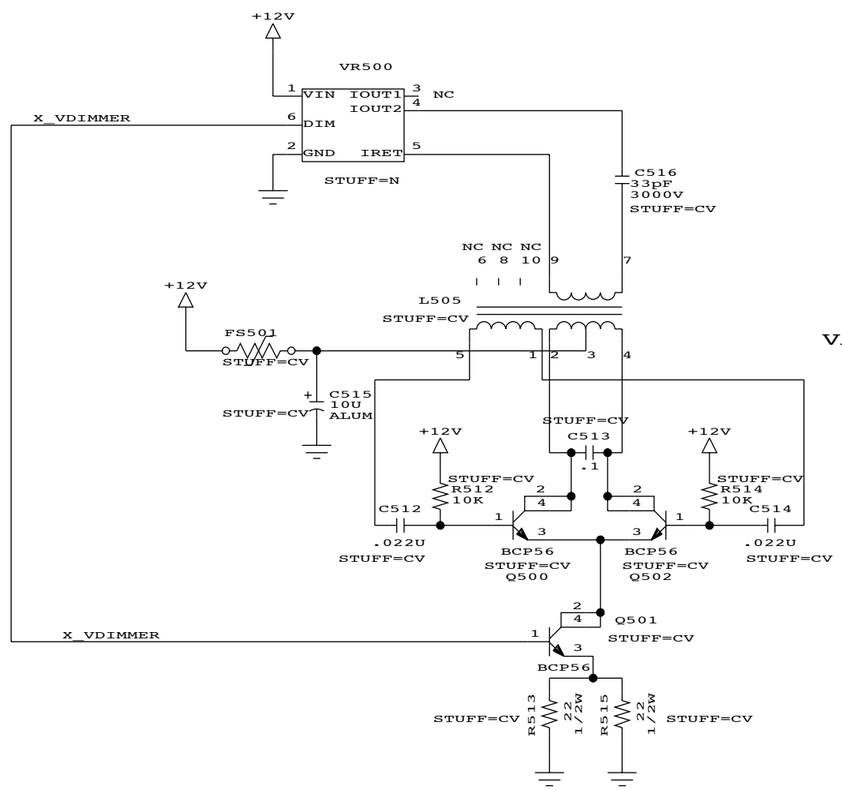

VARIABLE INTENSITY
GRAPHICS LCD
CCFL BACKLIGHT

24

DRAWING TITLE
SCHEMATIC
680x

E-MU	REV. C	DRAWING NO. SK524
	DATE 10-1-1997_10:26	
	SHEET 24	DRAWN BY TD

CCFL BACKLIGHT INTENSITY CONTROL BREAKAWAY BOARD

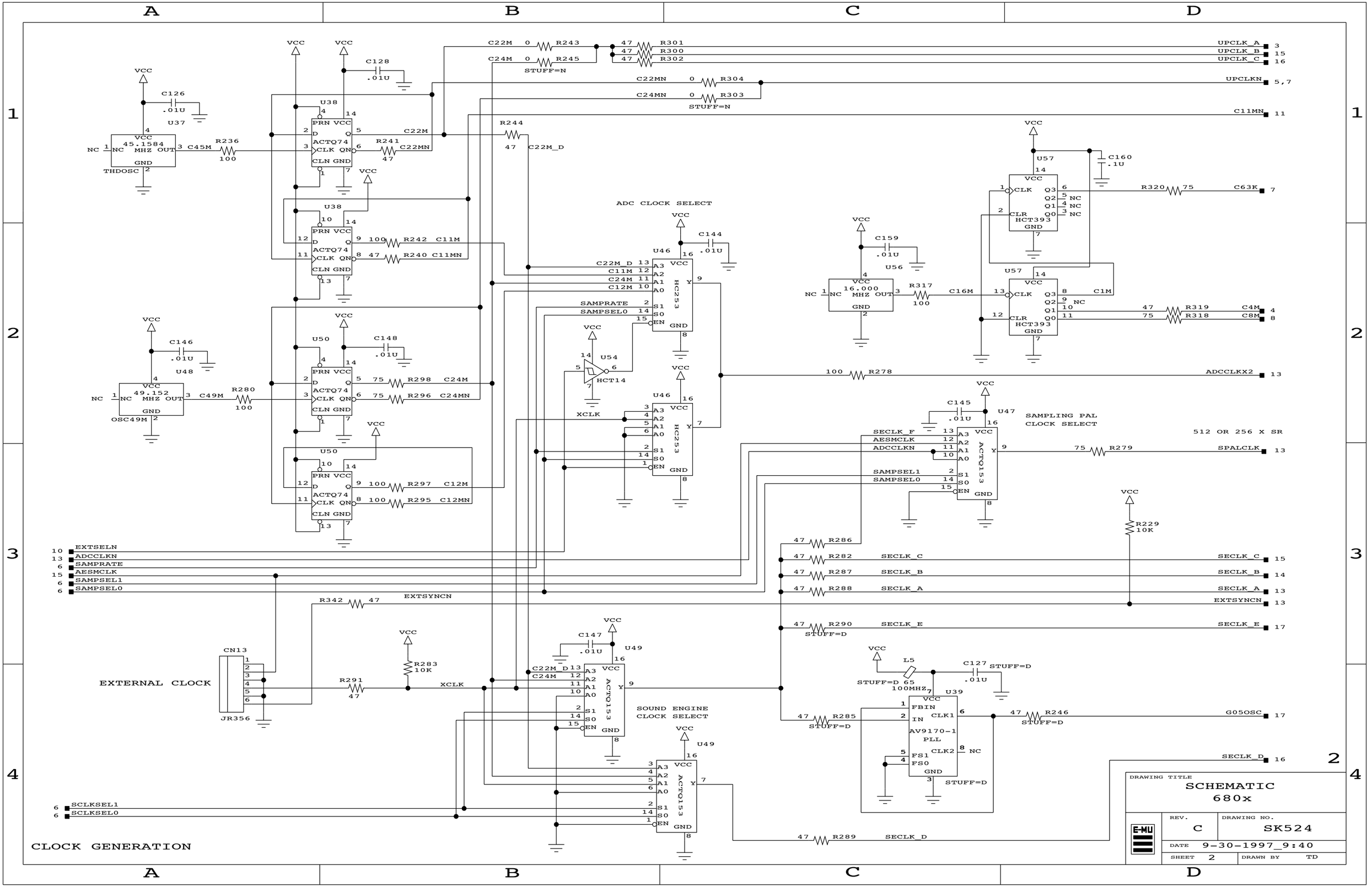
A
B
C
D
1
2
3
4
VCC
C126
.01U
U37
45.1584
MHZ OUT
NC
GND
THDOSC
C45M
R236
100
U38
PRN VCC
D
ACTQ74
CLK QN
CLN GND
C128
.01U
C22M
R241
C22MN
47
R244
47
C22M_D
C22M
R243
C24M
R245
STUFF=N
47
R301
R300
R302
C22MN
R304
C24MN
R303
STUFF=N
UPCLK_A
UPCLK_B
UPCLK_C
UPCLKN
C11MN
U38
R242
100
C11M
R240
47
C11MN
ADC CLOCK SELECT
U46
HC253
C144
.01U
C22M_D
C11M
C24M
C12M
SAMPRATE
SAMPSEL0
S1
S0
EN
Y
GND
U54
HCT14
XCLK
C146
.01U
U48
49.152
OSC49M
C49M
R280
100
U50
C148
.01U
R298
75
C24M
R296
75
C24MN
R297
100
C12M
R295
100
C12MN
U57
HCT393
CLK
CLR
Q3
Q2
Q1
Q0
NC
C160
.1U
R320
75
C63K
C159
.01U
U56
16.000
R317
100
C16M
C1M
R319
47
C4M
R318
75
C8M
R278
100
ADCCLKX2
U47
ACTQ153
C145
.01U
SECLK_F
AESMCLK
ADCCLKN
SAMPSEL1
SAMPSEL0
SAMPLING PAL
CLOCK SELECT
512 OR 256 X SR
R279
75
SPALCLK
R229
10K
EXTSELN
ADCCLKN
SAMPRATE
AESMCLK
SAMPSEL1
SAMPSEL0
R286
47
R282
SECLK_C
R287
SECLK_B
R288
SECLK_A
EXTSYNCN
R342
47
R290
SECLK_E
STUFF=D
CN13
EXTERNAL CLOCK
JR356
R291
47
R283
10K
XCLK
C147
.01U
U49
SOUND ENGINE
CLOCK SELECT
L5
65
100MHZ
C127
.01U
U39
FBIN
IN
CLK1
CLK2
AV9170-1
PLL
FS1
FS0
R285
R246
47
G05OSC
SECLK_D
R289
SCLKSEL1
SCLKSEL0
CLOCK GENERATION
DRAWING TITLE
SCHEMATIC
680x
E-MU
REV.
C
DRAWING NO.
SK524
DATE
9-30-1997_9:40
SHEET
2
DRAWN BY
TD

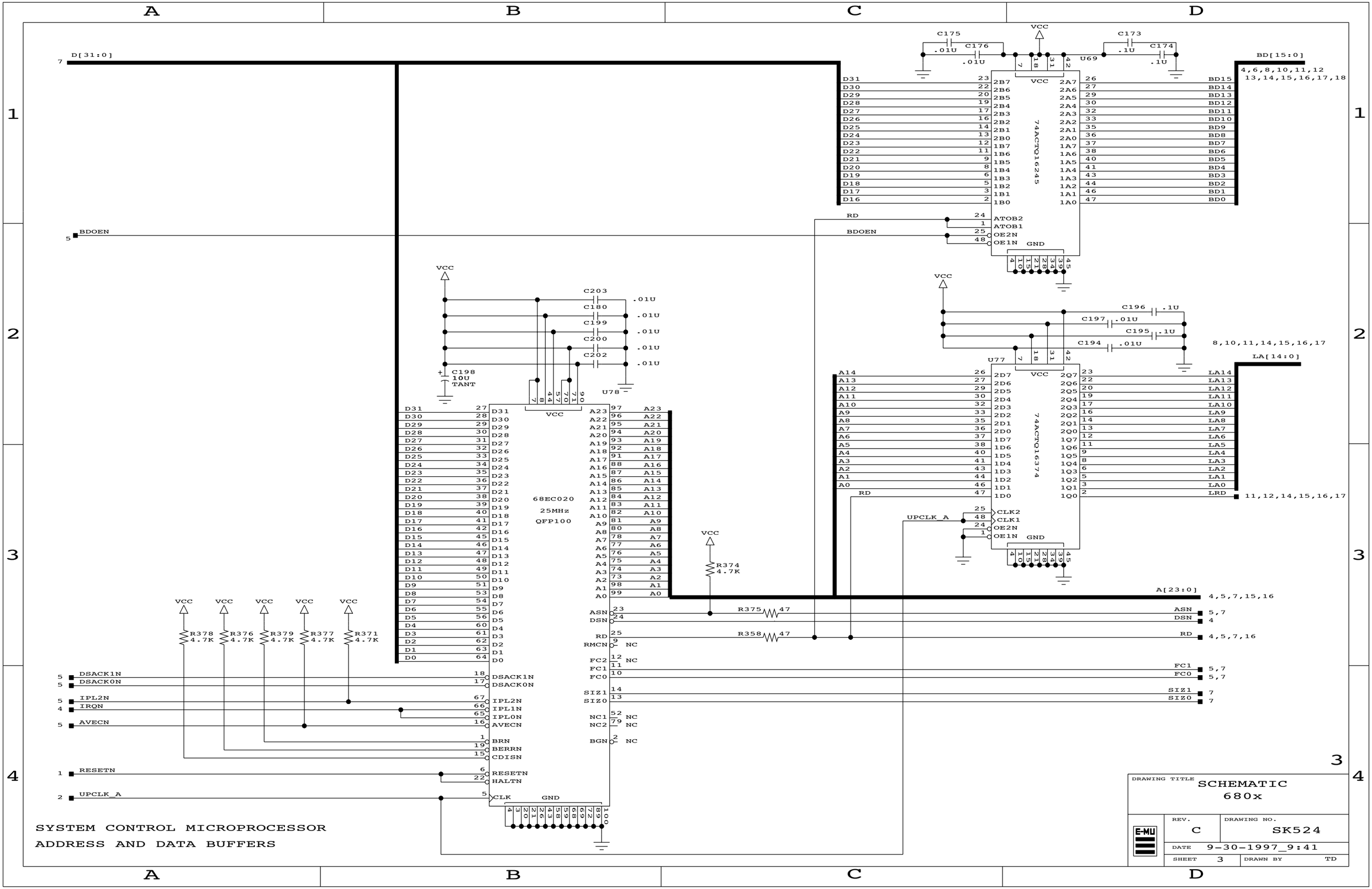
D[31:0]
BDOEN
BD[15:0]
4,6,8,10,11,12
13,14,15,16,17,18
U69
74ACTQ16245
RD
BDOEN
U77
74ACTQ16374
8,10,11,14,15,16,17
LA[14:0]
11,12,14,15,16,17
UPCLK_A
A[23:0]
4,5,7,15,16
68EC020
25MHz
QFP100
U78
C198
10U
TANT
R374
4.7K
R375
47
R358
47
R378
4.7K
R376
4.7K
R379
4.7K
R377
4.7K
R371
4.7K
DSACK1N
DSACK0N
IPL2N
IRQN
AVECN
RESETN
UPCLK_A
SYSTEM CONTROL MICROPROCESSOR
ADDRESS AND DATA BUFFERS
DRAWING TITLE
SCHEMATIC
680x
REV.
C
DRAWING NO.
SK524
DATE
9-30-1997_9:41
SHEET
3
DRAWN BY
TD

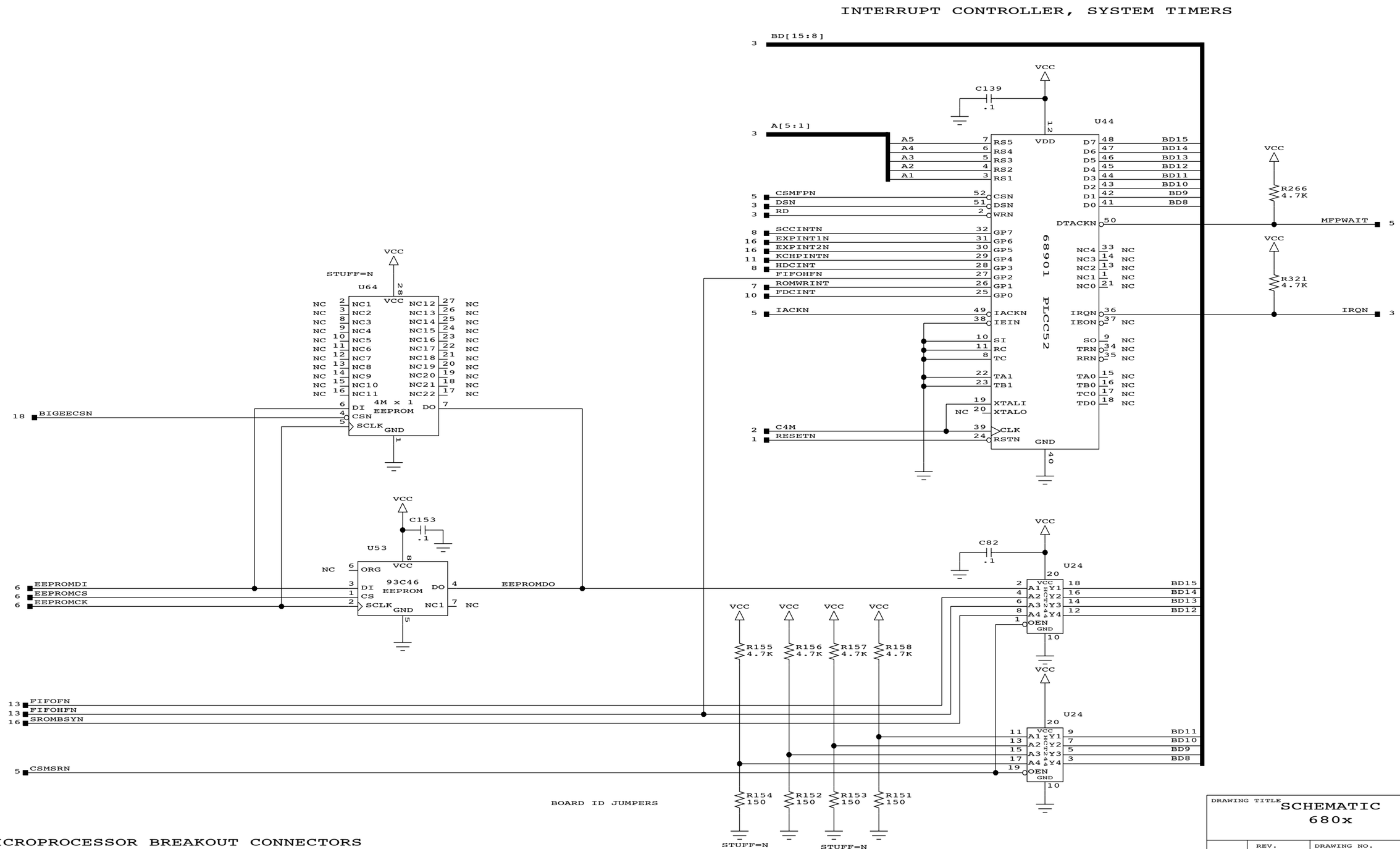
INTERRUPT CONTROLLER, SYSTEM TIMERS
BD[15:8]
A[5:1]
U44
68901 PLCC52
VCC
VDD
GND
C139
.1
R266
4.7K
R321
4.7K
MFPWAIT
IRQN
CSMFPN
DSN
RD
SCCINTN
EXPINT1N
EXPINT2N
KCHPINTN
HDCINT
FIFOHFN
ROMWRINT
FDCINT
IACKN
C4M
RESETN
STUFF=N
U64
4M x 1
EEPROM
BIGEECSN
U53
93C46
EEPROM
EEPROMDI
EEPROMCS
EEPROMCK
EEPROMDO
C153
C82
U24
HCT244
FIFOFN
FIFOHFN
SROMBSYN
CSMSRN
R155
4.7K
R156
4.7K
R157
4.7K
R158
4.7K
R154
150
R152
150
R153
150
R151
150
BOARD ID JUMPERS
MICROPROCESSOR BREAKOUT CONNECTORS
INTERRUPT CONTROLLER, TIMERS, EEPROM
MISC READ LATCH
DRAWING TITLE
SCHEMATIC
680x
REV.
C
DRAWING NO.
SK524
DATE
10-1-1997_10:22
SHEET
4
DRAWN BY
TD
E-MU

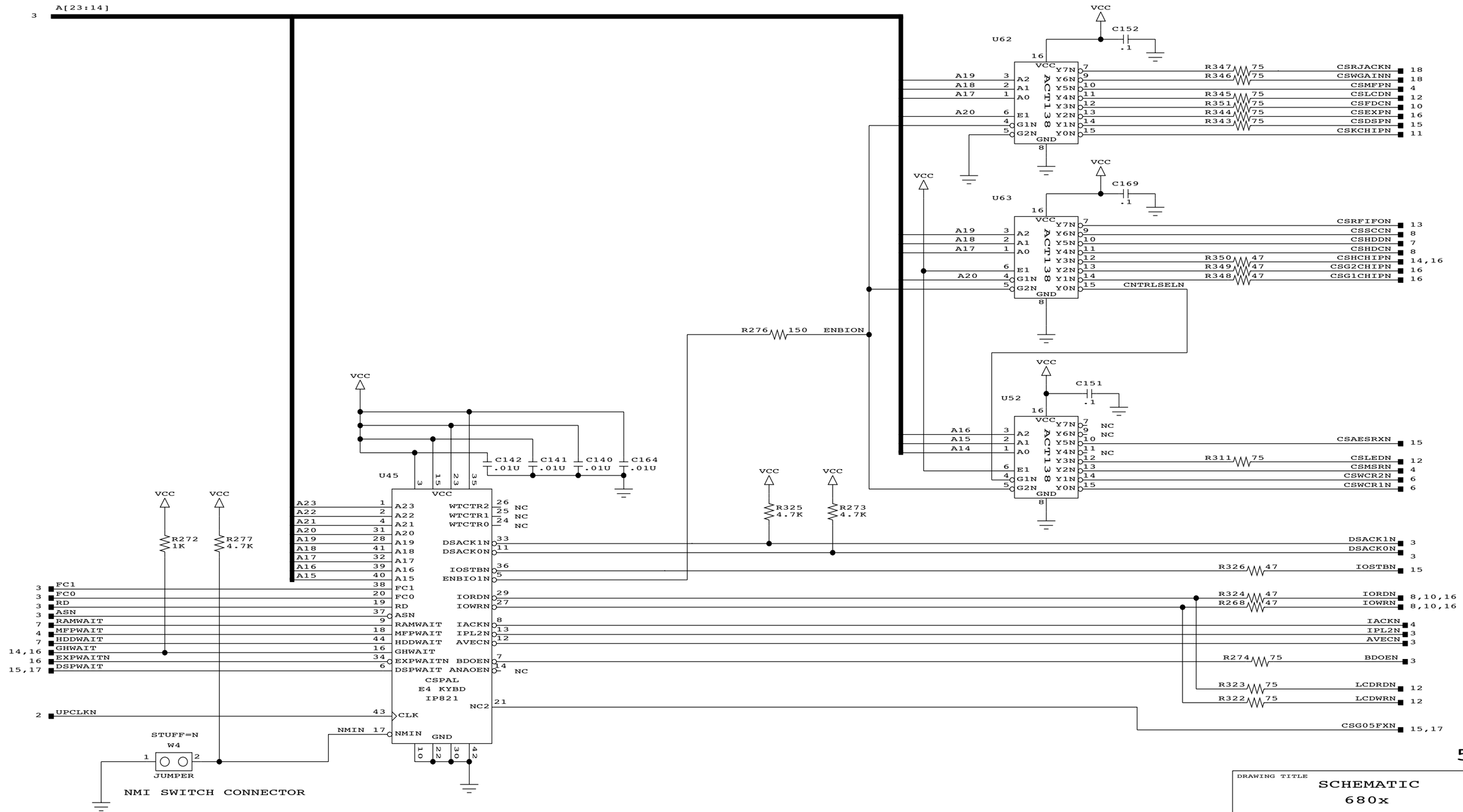
A[23:14]
U62
ACT138
C152
.1
CSRJACKN
CSWGAINN
CSMFPN
CSLCDN
CSFDCN
CSEXPN
CSDSPN
CSKCHIPN
U63
C169
CSRFIFON
CSSCCN
CSHDDN
CSHDCN
CSHCHIPN
CSG2CHIPN
CSG1CHIPN
CNTRLSELN
R276 150 ENBION
U52
C151
CSAESRXN
CSLEDN
CSMSRN
CSWCR2N
CSWCR1N
C142 .01U
C141 .01U
C140 .01U
C164 .01U
U45
CSPAL
E4 KYBD
IP821
R272 1K
R277 4.7K
R325 4.7K
R273 4.7K
DSACK1N
DSACK0N
IOSTBN
IORDN
IOWRN
IACKN
IPL2N
AVECN
BDOEN
LCDRDN
LCDWRN
CSG05FXN
UPCLKN
STUFF=N
W4
JUMPER
NMI SWITCH CONNECTOR
ADDRESS DECODING
NMI SWITCH
DRAWING TITLE
SCHEMATIC
680x
REV. C
DRAWING NO. SK524
DATE 9-30-1997_9:47
SHEET 5
DRAWN BY TD
E-MU

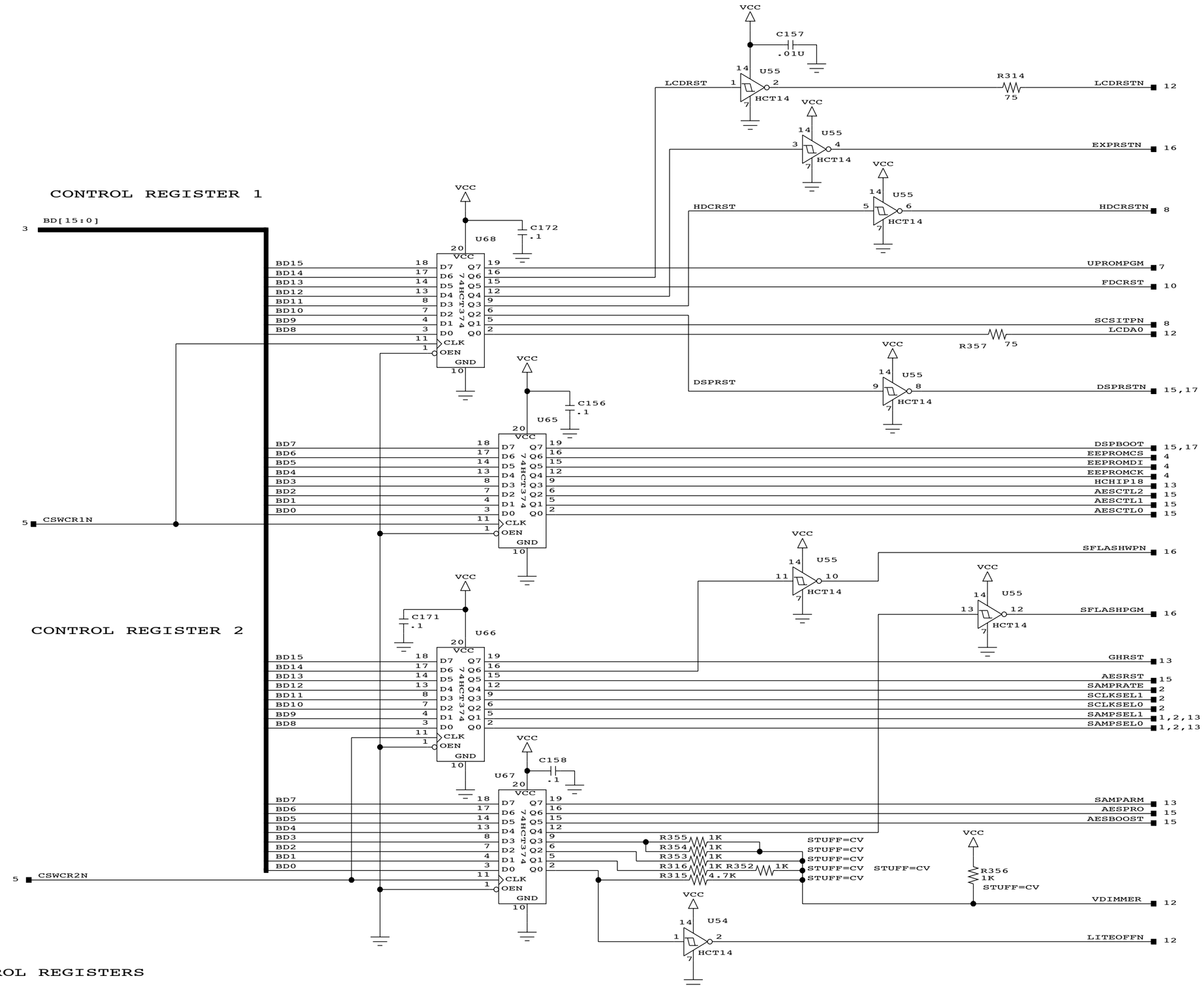
CONTROL REGISTER 1
CONTROL REGISTER 2
BD[15:0]
CSWCR1N
CSWCR2N
U68
U65
U66
U67
74HCT374
U55
U54
HCT14
C157 .01U
C172 .1
C156 .1
C171 .1
C158 .1
R314 75
R357 75
R355 1K
R354 1K
R353 1K
R316 1K
R315 4.7K
R352 1K
R356 1K
STUFF=CV
LCDRST
HDCRST
DSPRST
LCDRSTN
EXPRSTN
HDCRSTN
UPROMPGM
FDCRST
SCSITPN
LCDA0
DSPRSTN
DSPBOOT
EEPROMCS
EEPROMDI
EEPROMCK
HCHIP18
AESCTL2
AESCTL1
AESCTL0
SFLASHWPN
SFLASHPGM
GHRST
AESRST
SAMPRATE
SCLKSEL1
SCLKSEL0
SAMPSEL1
SAMPSEL0
SAMPARM
AESPRO
AESBOOST
VDIMMER
LITEOFFN
CONTROL REGISTERS
DRAWING TITLE
SCHEMATIC
680x
REV. C
DRAWING NO. SK524
DATE 9-30-1997_9:49
SHEET 6
DRAWN BY TD
E-MU

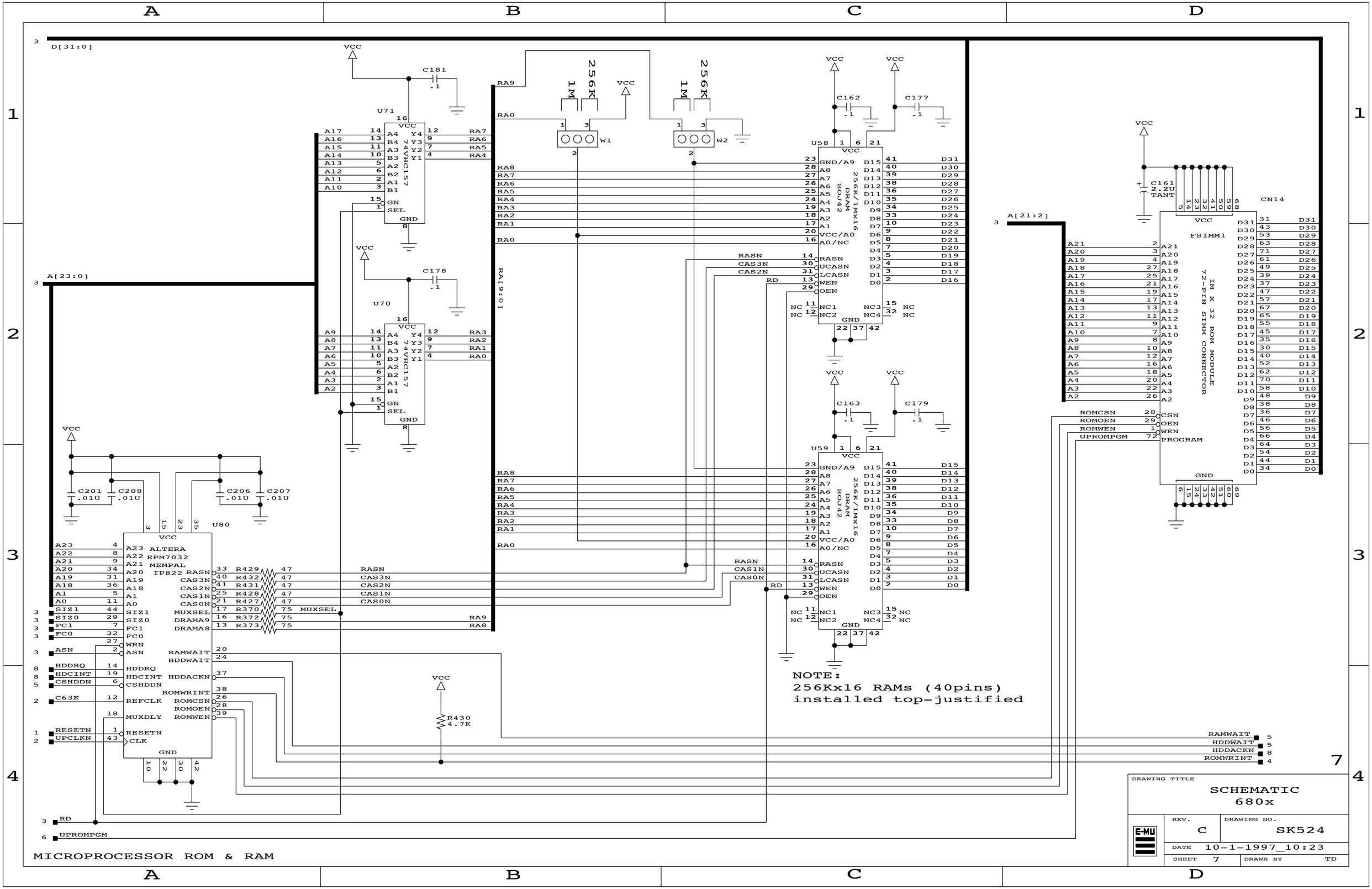
D[31:0]
A[23:0]
A[21:2]
U71
U70
U80
74VHC157
ALTERA
EPM7032
MEMPAL
IP822
U58
U59
256K/1Mx16
DRAM
SOJ42
W1
W2
256K
1M
CN14
FSIMM1
1M X 32 ROM MODULE
72-PIN SIMM CONNECTOR
C161
2.2U
TANT
R430
4.7K
MUXSEL
RAMWAIT
HDDWAIT
HDDACKN
ROMWRINT
ROMCSN
ROMOEN
ROMWEN
UPROMPGM
RESETN
UPCLKN
C63K
RD
ASN
NOTE:
256Kx16 RAMs (40pins)
installed top-justified
DRAWING TITLE
SCHEMATIC
680x
REV.
C
DRAWING NO.
SK524
DATE
10-1-1997_10:23
SHEET
7
DRAWN BY
TD
E-MU
MICROPROCESSOR ROM & RAM

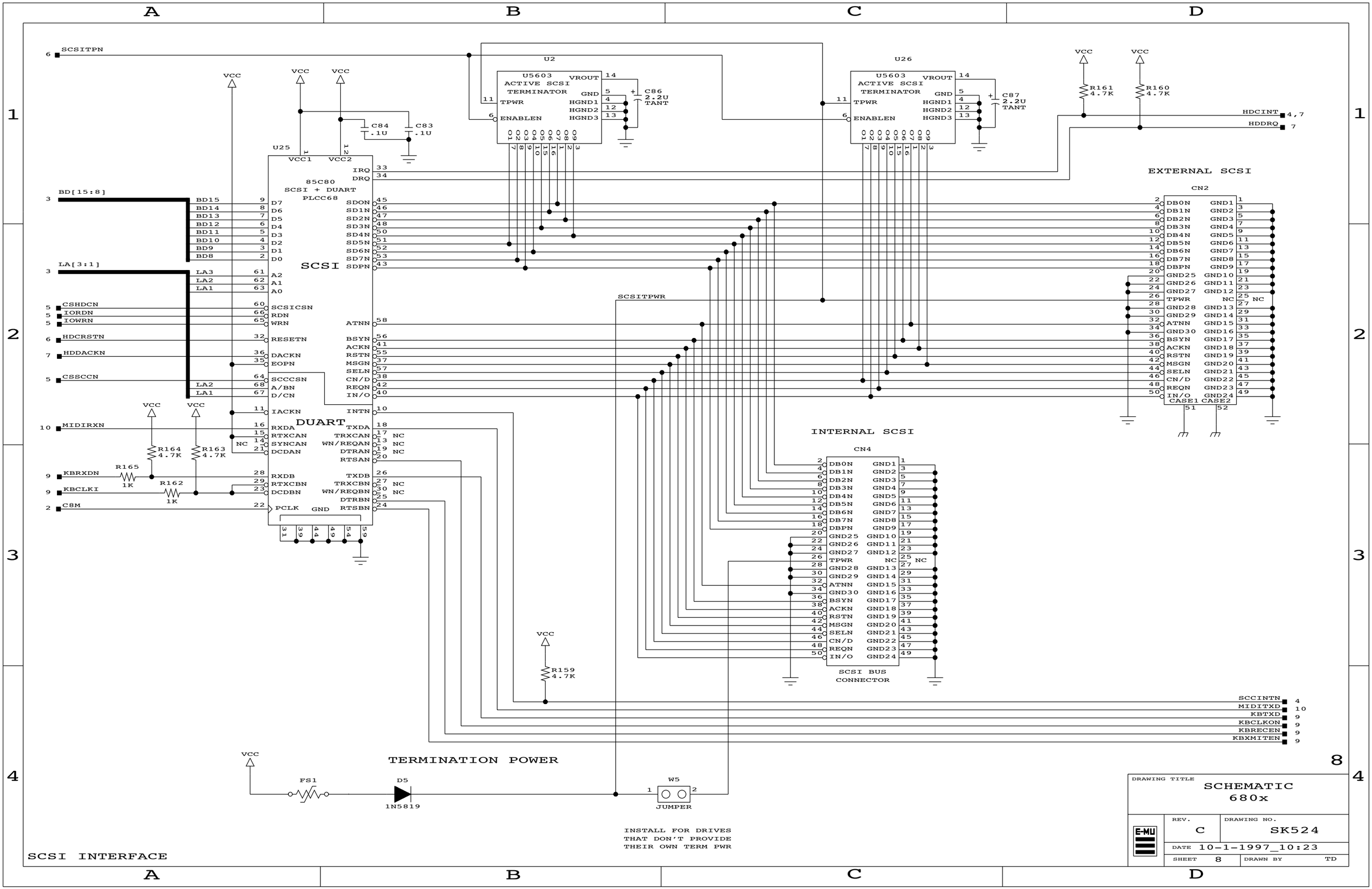
SCSITPN
U2
U5603 ACTIVE SCSI TERMINATOR
VROUT
GND
HGND1
HGND2
HGND3
TPWR
ENABLEN
C86 2.2U TANT
U26
C87 2.2U TANT
VCC
R161 4.7K
R160 4.7K
HDCINT
HDDRQ
C84 .1U
C83 .1U
U25
VCC1
VCC2
85C80 SCSI + DUART PLCC68
SCSI
IRQ
DRQ
BD[15:8]
LA[3:1]
CSHDCN
IORDN
IOWRN
HDCRSTN
HDDACKN
CSSCCN
MIDIRXN
KBRXDN
KBCLKI
C8M
SCSICSN
RDN
WRN
RESETN
DACKN
EOPN
SCCCSN
IACKN
DUART
RXDA
RTXCAN
SYNCAN
DCDAN
RXDB
RTXCBN
DCDBN
PCLK
GND
TXDA
TRXCAN
WN/REQAN
DTRAN
RTSAN
TXDB
TRXCBN
WN/REQBN
DTRBN
RTSBN
NC
R164 4.7K
R163 4.7K
R165 1K
R162 1K
EXTERNAL SCSI
CN2
CASE1
CASE2
SCSITPWR
INTERNAL SCSI
CN4
SCSI BUS CONNECTOR
R159 4.7K
SCCINTN
MIDITXD
KBTXD
KBCLKON
KBRECEN
KBXMITEN
TERMINATION POWER
FS1
D5
1N5819
W5
JUMPER
INSTALL FOR DRIVES THAT DON'T PROVIDE THEIR OWN TERM PWR
SCSI INTERFACE
DRAWING TITLE
SCHEMATIC 680x
REV. C
DRAWING NO. SK524
DATE 10-1-1997_10:23
SHEET 8
DRAWN BY TD
E-MU

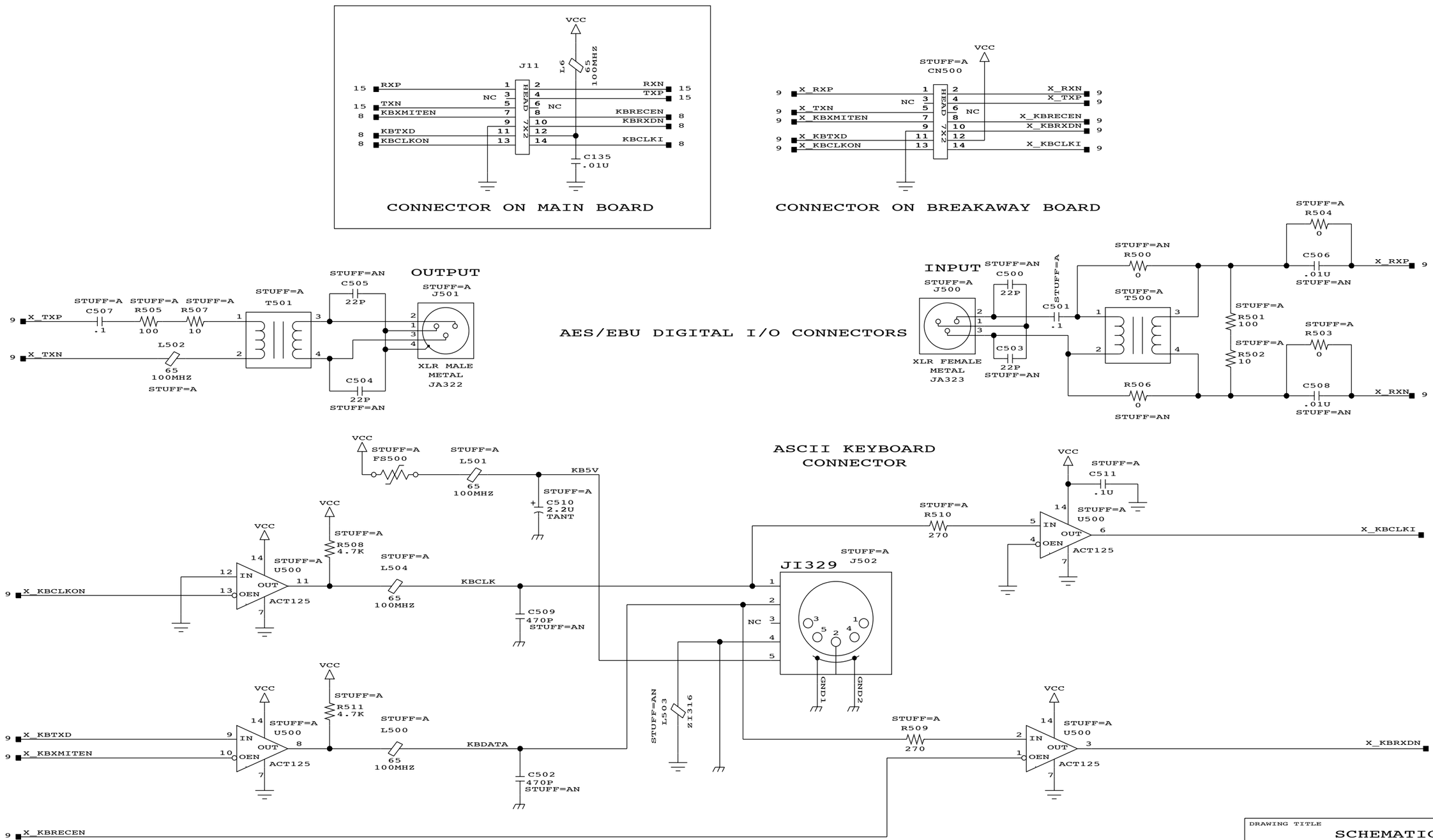
CONNECTOR ON MAIN BOARD
CONNECTOR ON BREAKAWAY BOARD
AES/EBU DIGITAL I/O CONNECTORS
INPUT
OUTPUT
XLR FEMALE METAL JA323
XLR MALE METAL JA322
ASCII KEYBOARD CONNECTOR
JI329
ASCII & DIGITAL I/O BREAKWAY BOARD
DRAWING TITLE
SCHEMATIC 680x
REV. C
DRAWING NO. SK524
DATE 10-1-1997_10:23
SHEET 9
DRAWN BY TD

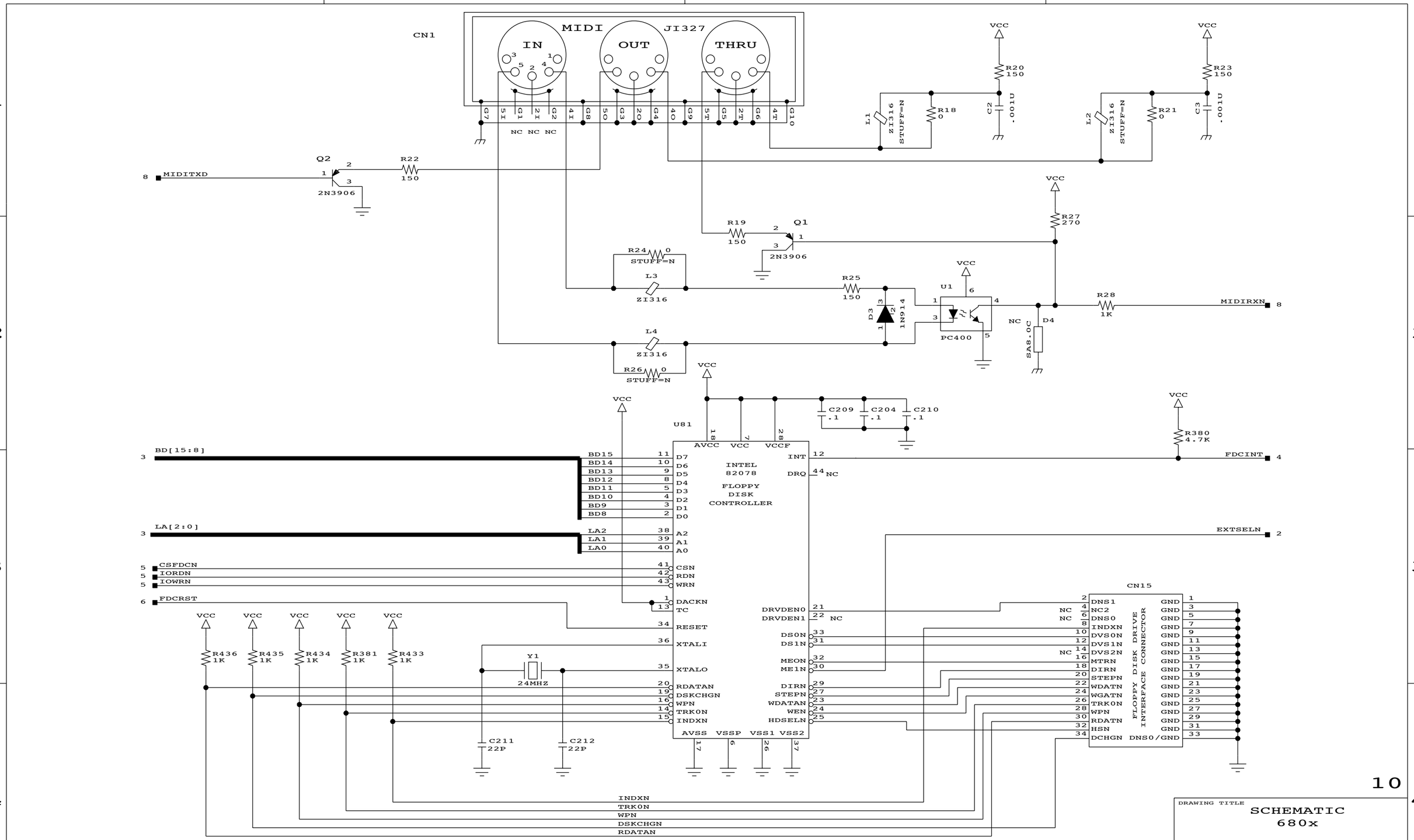

10

DRAWING TITLE
SCHEMATIC
680x

REV. C	DRAWING NO. SK524
DATE 10-1-1997_10:24	
SHEET 10	DRAWN BY TD

MIDI INTERFACE
FLOPPY DISK DRIVE INTERFACE

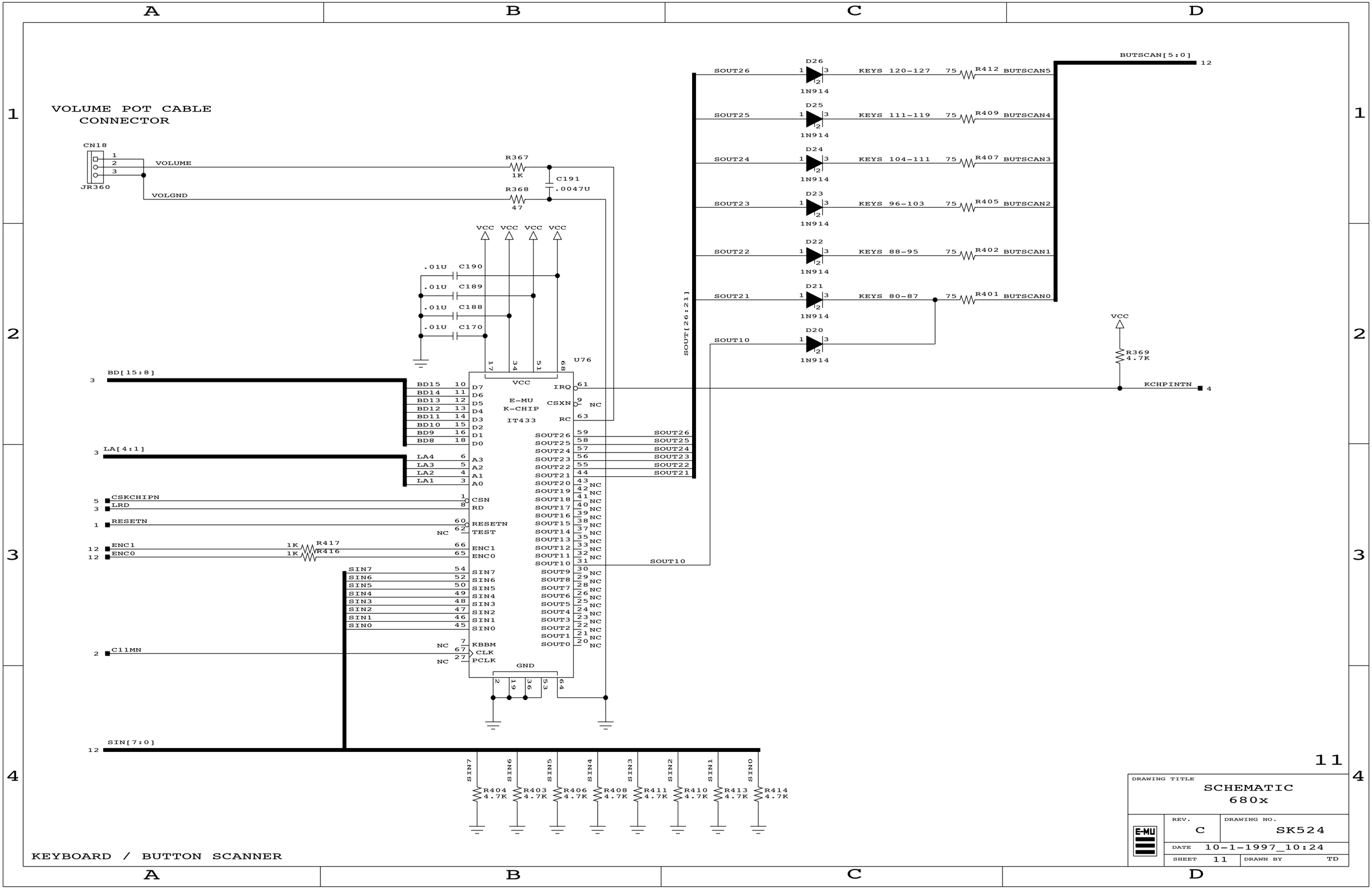
VOLUME POT CABLE CONNECTOR
CN18
JR360
VOLUME
VOLGND
R367 1K
R368 47
C191 .0047U
VCC
.01U C190
.01U C189
.01U C188
.01U C170
U76
E-MU K-CHIP IT433
BD[15:8]
LA[4:1]
CSKCHIPN
LRD
RESETN
ENC1
ENC0
R417 1K
R416 1K
C11MN
SIN[7:0]
SOUT[26:21]
SOUT10
GND
NC
D26 1N914 SOUT26 KEYS 120-127 75 R412 BUTSCAN5
D25 1N914 SOUT25 KEYS 111-119 75 R409 BUTSCAN4
D24 1N914 SOUT24 KEYS 104-111 75 R407 BUTSCAN3
D23 1N914 SOUT23 KEYS 96-103 75 R405 BUTSCAN2
D22 1N914 SOUT22 KEYS 88-95 75 R402 BUTSCAN1
D21 1N914 SOUT21 KEYS 80-87 75 R401 BUTSCAN0
D20 1N914 SOUT10
BUTSCAN[5:0]
R369 4.7K
KCHPINTN
R404 4.7K
R403 4.7K
R406 4.7K
R408 4.7K
R411 4.7K
R410 4.7K
R413 4.7K
R414 4.7K
KEYBOARD / BUTTON SCANNER
11
DRAWING TITLE
SCHEMATIC
680x
REV. C
DRAWING NO. SK524
DATE 10-1-1997_10:24
SHEET 11
DRAWN BY TD

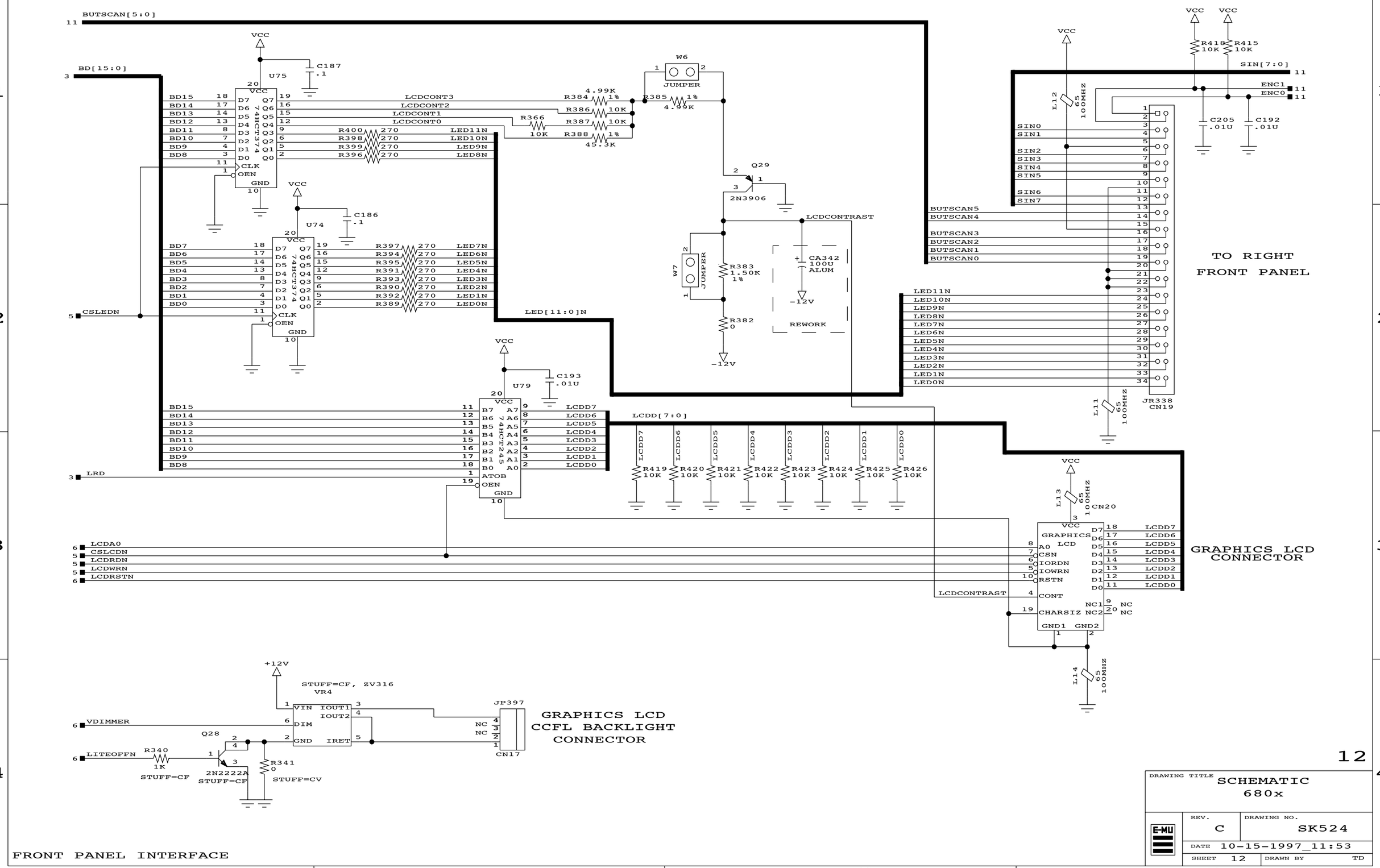
BUTSCAN[5:0]
BD[15:0]
CSLEDN
LRD
U75
U74
U79
74HCT374
74HCT374
74HC245
C187 .1
C186 .1
C193 .01U
W6 JUMPER
W7 JUMPER
R384 4.99K 1%
R385 4.99K 1%
R386 10K
R387 10K
R388 45.3K 1%
R366 10K
R400 270
R398 270
R399 270
R396 270
R397 270
R394 270
R395 270
R391 270
R393 270
R390 270
R392 270
R389 270
LCDCONT3
LCDCONT2
LCDCONT1
LCDCONT0
LED11N
LED10N
LED9N
LED8N
LED7N
LED6N
LED5N
LED4N
LED3N
LED2N
LED1N
LED0N
LED[11:0]N
LCDD[7:0]
Q29 2N3906
R383 1.50K 1%
R382 0
CA342 100U ALUM
REWORK
LCDCONTRAST
-12V
VCC
R418 10K
R415 10K
SIN[7:0]
ENC1
ENC0
C205 .01U
C192 .01U
L12 65 100MHZ
L11 65 100MHZ
L13 65 100MHZ
L14 65 100MHZ
SIN0
SIN1
SIN2
SIN3
SIN4
SIN5
SIN6
SIN7
BUTSCAN5
BUTSCAN4
BUTSCAN3
BUTSCAN2
BUTSCAN1
BUTSCAN0
JR338 CN19
TO RIGHT FRONT PANEL
R419 10K
R420 10K
R421 10K
R422 10K
R423 10K
R424 10K
R425 10K
R426 10K
LCDD7
LCDD6
LCDD5
LCDD4
LCDD3
LCDD2
LCDD1
LCDD0
CN20
GRAPHICS LCD
LCDA0
CSLCDN
LCDRDN
LCDWRN
LCDRSTN
A0
CSN
IORDN
IOWRN
RSTN
CONT
CHARSIZ
GND1
GND2
NC1
NC2
NC
GRAPHICS LCD CONNECTOR
+12V
STUFF=CF, ZV316
VR4
VIN
IOUT1
IOUT2
DIM
GND
IRET
VDIMMER
LITEOFFN
Q28 2N2222A
STUFF=CF
R340 1K
STUFF=CF
R341 0
STUFF=CV
JP397
CN17
GRAPHICS LCD CCFL BACKLIGHT CONNECTOR
FRONT PANEL INTERFACE
12
DRAWING TITLE
SCHEMATIC
680x
E-MU
REV. C
DRAWING NO. SK524
DATE 10-15-1997_11:53
SHEET 12
DRAWN BY TD

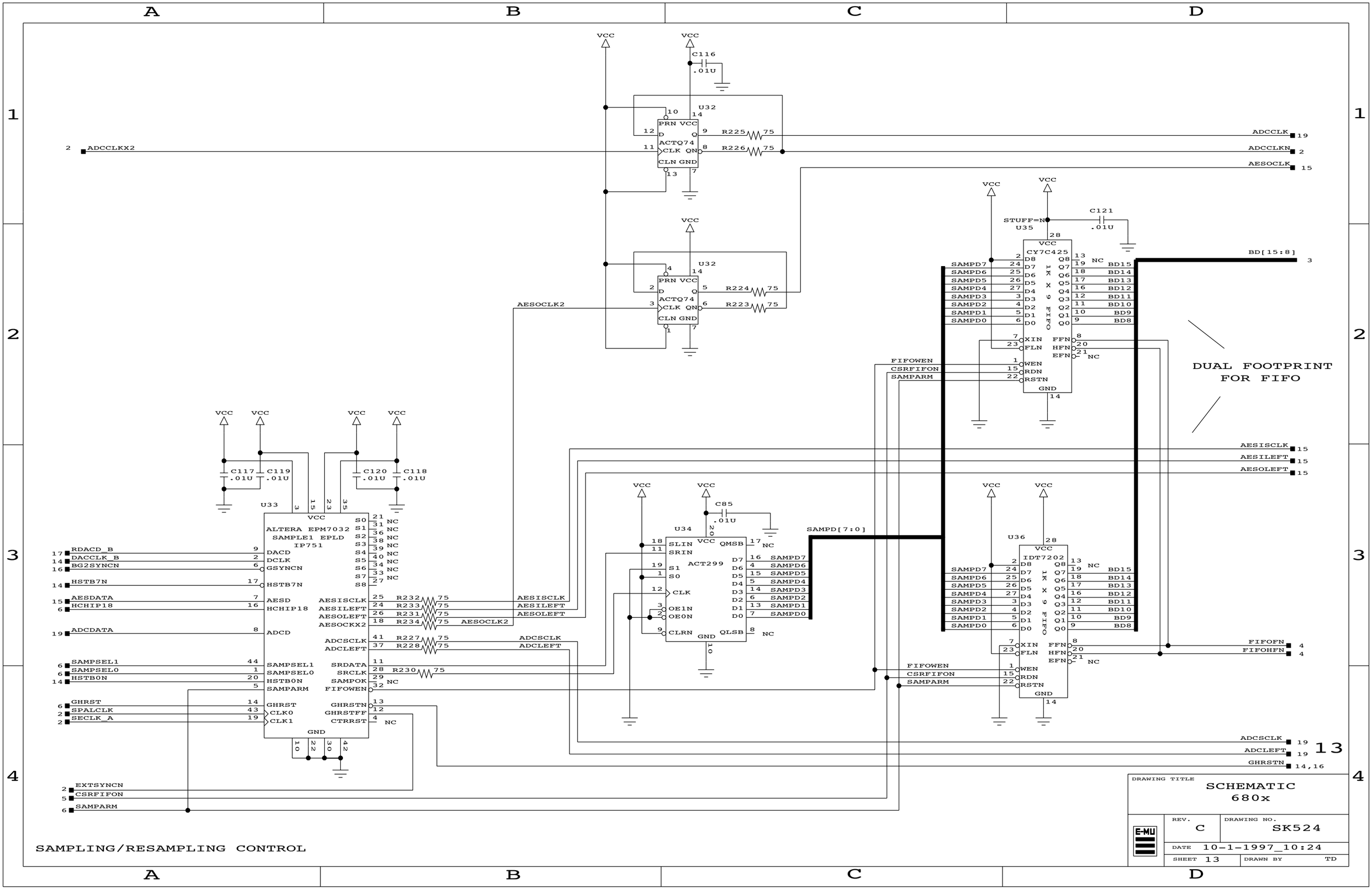
U32
ACTQ74
PRN VCC
CLK QN
CLN GND
C116
.01U
R225 75
R226 75
R224 75
R223 75
ADCCLKX2
AESOCLK2
ADCCLK
ADCCLKN
AESOCLK
U35
CY7C425
FIFO 1K X 9
C121
STUFF=NC
BD[15:8]
SAMPD7
SAMPD6
SAMPD5
SAMPD4
SAMPD3
SAMPD2
SAMPD1
SAMPD0
FIFOWEN
CSRFIFON
SAMPARM
DUAL FOOTPRINT
FOR FIFO
AESISCLK
AESILEFT
AESOLEFT
C117 .01U
C119 .01U
C120 .01U
C118 .01U
U33
ALTERA EPM7032
SAMPLE1 EPLD
IP751
RDACD_B
DACCLK_B
BG2SYNCN
HSTB7N
AESDATA
HCHIP18
ADCDATA
SAMPSEL1
SAMPSEL0
HSTB0N
GHRST
SPALCLK
SECLK_A
EXTSYNCN
CSRFIFON
SAMPARM
AESISCLK
AESILEFT
AESOLEFT
AESOCLK2
ADCSCLK
ADCLEFT
R232 75
R233 75
R231 75
R234 75
R227 75
R228 75
R230 75
U34
ACT299
C85
.01U
SAMPD[7:0]
U36
IDT7202
FIFOFN
FIFOHFN
ADCSCLK
ADCLEFT
GHRSTN
13
DRAWING TITLE
SCHEMATIC
680x
REV.
C
DRAWING NO.
SK524
DATE 10-1-1997_10:24
SHEET 13
DRAWN BY TD
SAMPLING/RESAMPLING CONTROL

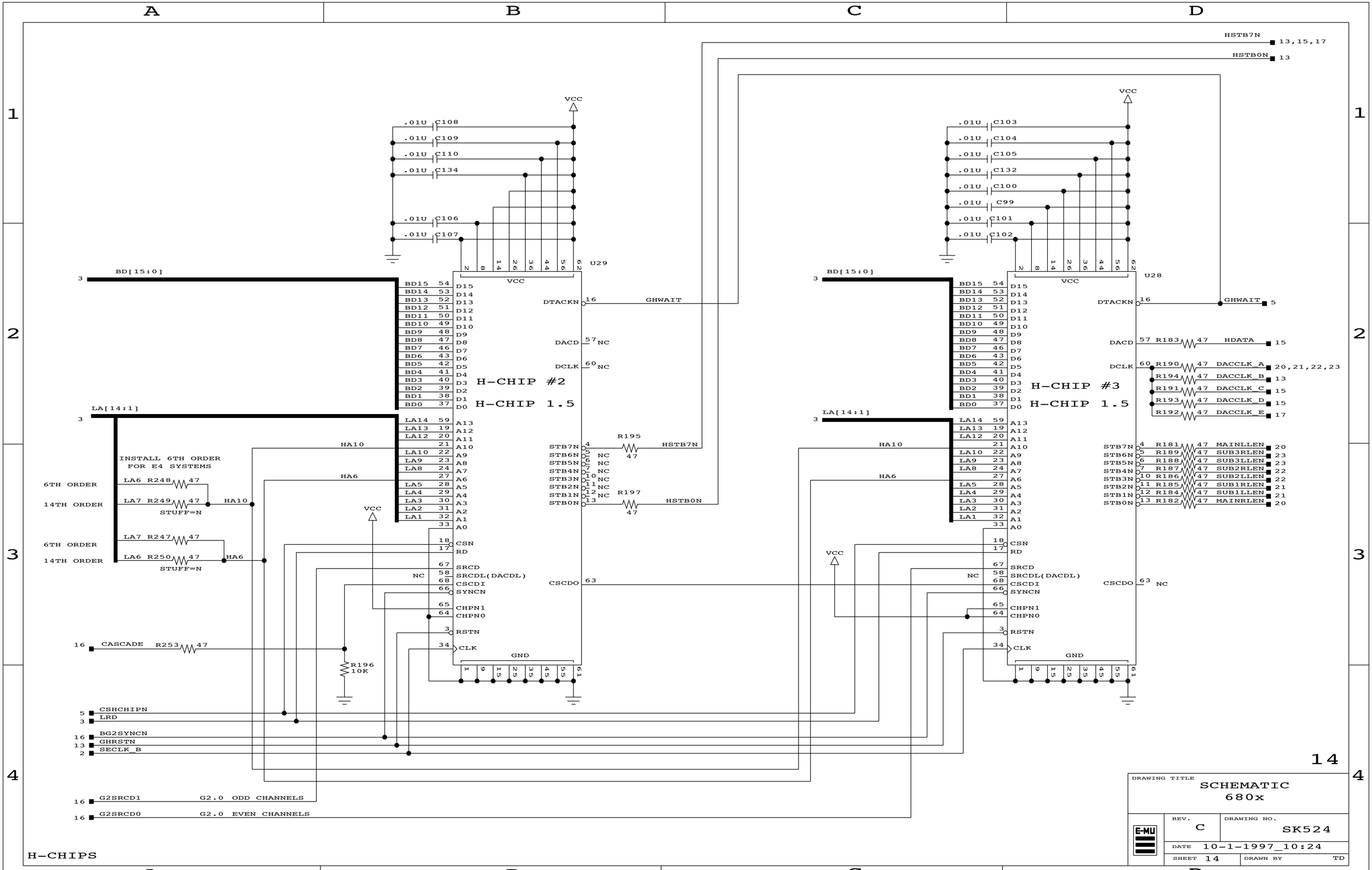
HSTB7N 13,15,17
HSTB0N 13
VCC
.01U C108
.01U C109
.01U C110
.01U C134
.01U C106
.01U C107
U29
BD[15:0]
DTACKN 16 GHWAIT
DACD 57 NC
DCLK 60 NC
H-CHIP #2
H-CHIP 1.5
LA[14:1]
STB7N 4 R195 47 HSTB7N
STB6N 5 NC
STB5N 6 NC
STB4N 7 NC
STB3N 10 NC
STB2N 11 NC
STB1N 12 NC
STB0N 13 R197 47 HSTB0N
HA10
HA6
INSTALL 6TH ORDER
FOR E4 SYSTEMS
6TH ORDER
14TH ORDER
LA6 R248 47
LA7 R249 47 HA10
STUFF=N
LA7 R247 47
LA6 R250 47 HA6
STUFF=N
CSN
RD
SRCD
NC SRCDL(DACDL)
CSCDI
CSCDO 63
SYNCN
CHPN1
CHPN0
RSTN
CLK
GND
16 CASCADE R253 47
R196 10K
5 CSHCHIPN
3 LRD
16 BG2SYNCN
13 GHRSTN
2 SECLK_B
16 G2SRCD1 G2.0 ODD CHANNELS
16 G2SRCD0 G2.0 EVEN CHANNELS
.01U C103
.01U C104
.01U C105
.01U C132
.01U C100
.01U C99
.01U C101
.01U C102
U28
DTACKN 16 GHWAIT 5
DACD 57 R183 47 HDATA 15
DCLK 60 R190 47 DACCLK_A 20,21,22,23
R194 47 DACCLK_B 13
R191 47 DACCLK_C 15
R193 47 DACCLK_D 15
R192 47 DACCLK_E 17
H-CHIP #3
H-CHIP 1.5
STB7N 4 R181 47 MAINLLEN 20
STB6N 5 R189 47 SUB3RLEN 23
STB5N 6 R188 47 SUB3LLEN 23
STB4N 7 R187 47 SUB2RLEN 22
STB3N 10 R186 47 SUB2LLEN 22
STB2N 11 R185 47 SUB1RLEN 21
STB1N 12 R184 47 SUB1LLEN 21
STB0N 13 R182 47 MAINRLEN 20
CSCDO 63 NC
14
DRAWING TITLE
SCHEMATIC
680x
E-MU
REV. C
DRAWING NO. SK524
DATE 10-1-1997_10:24
SHEET 14
DRAWN BY TD
H-CHIPS

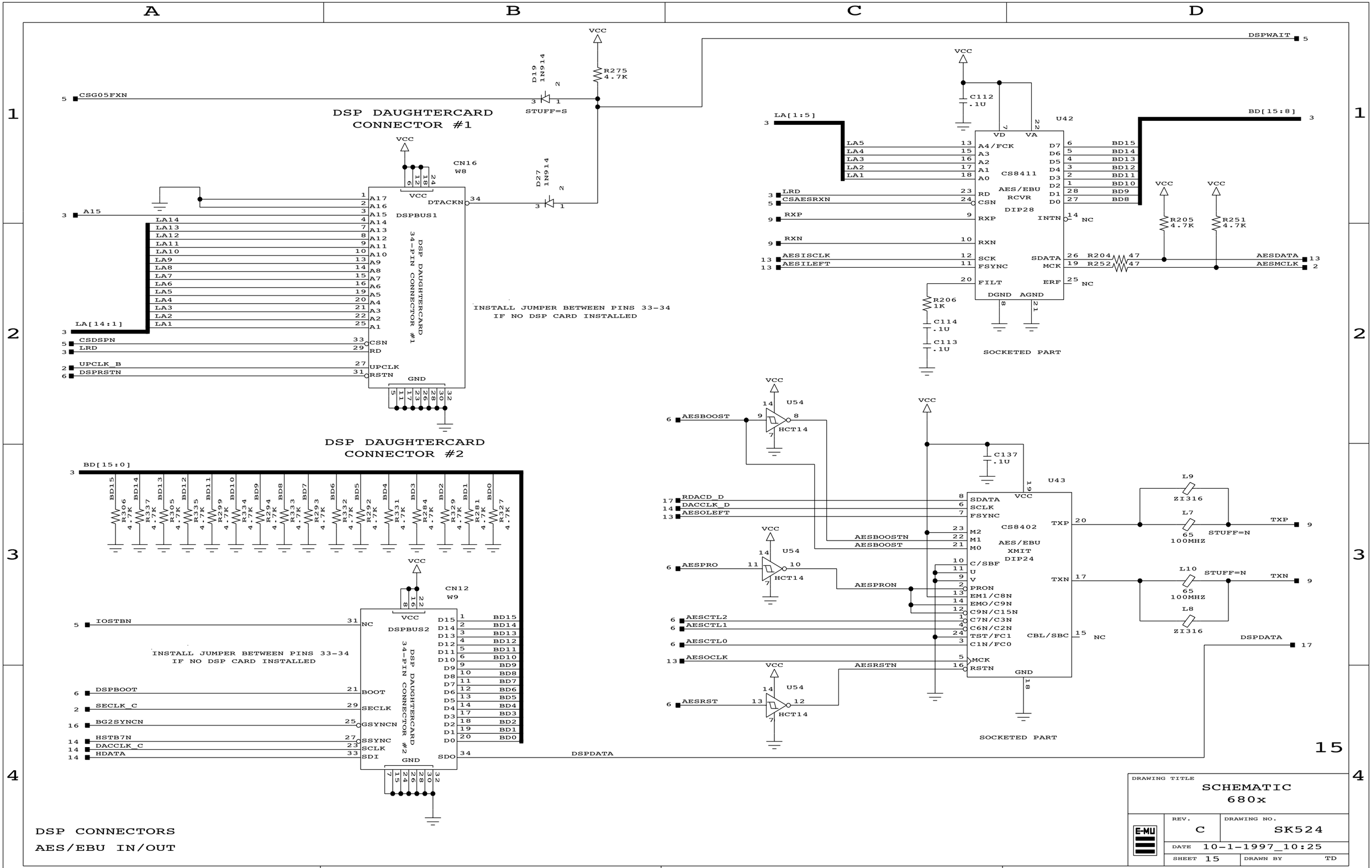
DSP DAUGHTERCARD CONNECTOR #1
CN16
W8
DSPBUS1
DSP DAUGHTERCARD 34-PIN CONNECTOR #1
INSTALL JUMPER BETWEEN PINS 33-34 IF NO DSP CARD INSTALLED
DSP DAUGHTERCARD CONNECTOR #2
CN12
W9
DSPBUS2
DSP DAUGHTERCARD 34-PIN CONNECTOR #2
INSTALL JUMPER BETWEEN PINS 33-34 IF NO DSP CARD INSTALLED
U42
CS8411
AES/EBU RCVR
DIP28
SOCKETED PART
U43
CS8402
AES/EBU XMIT
DIP24
SOCKETED PART
U54
HCT14
STUFF=S
STUFF=N
DSPWAIT
DSPDATA
AESDATA
AESMCLK
TXP
TXN
DSP CONNECTORS
AES/EBU IN/OUT
DRAWING TITLE
SCHEMATIC
680x
REV. C
DRAWING NO. SK524
DATE 10-1-1997_10:25
SHEET 15
DRAWN BY TD
15

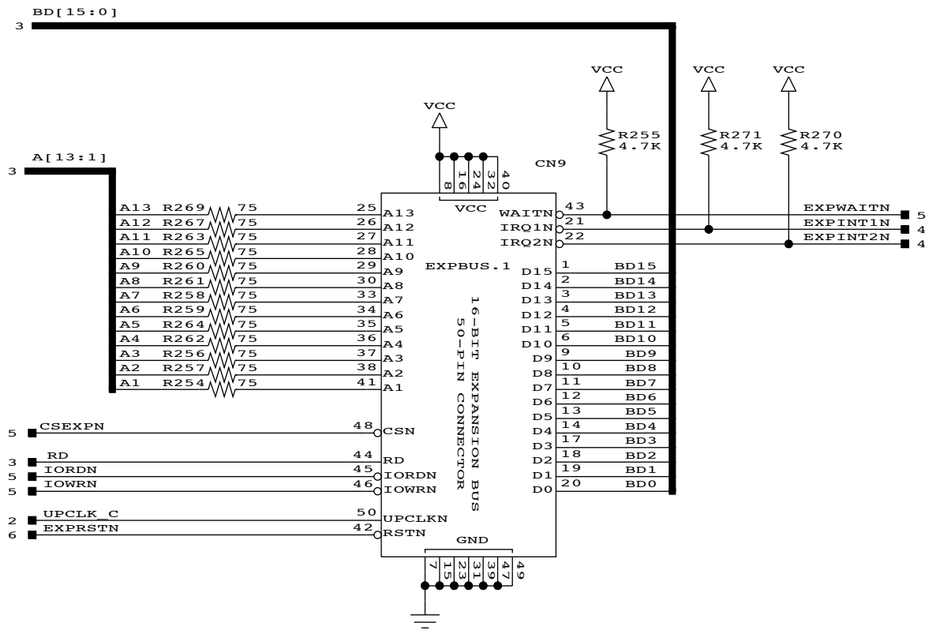

EXPANSION CONNECTOR

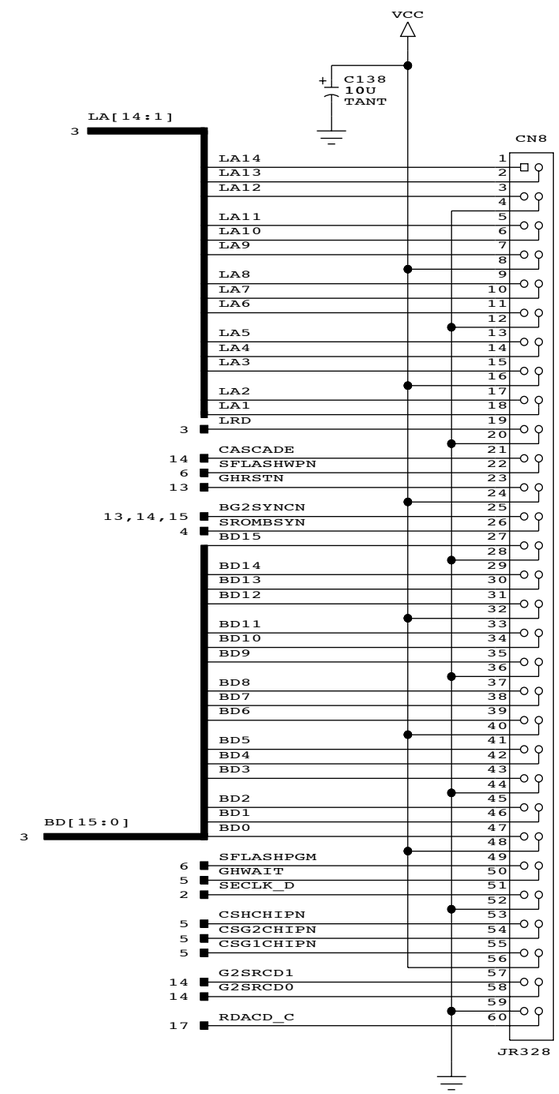

POLYPHONY CONNECTOR

16

EXPANSION CONNECTOR
POLYPHONY CONNECTOR

DRAWING TITLE
SCHEMATIC
680x

E-MU	REV. C	DRAWING NO. SK524
	DATE 10-1-1997_10:25	
	SHEET 16	DRAWN BY TD

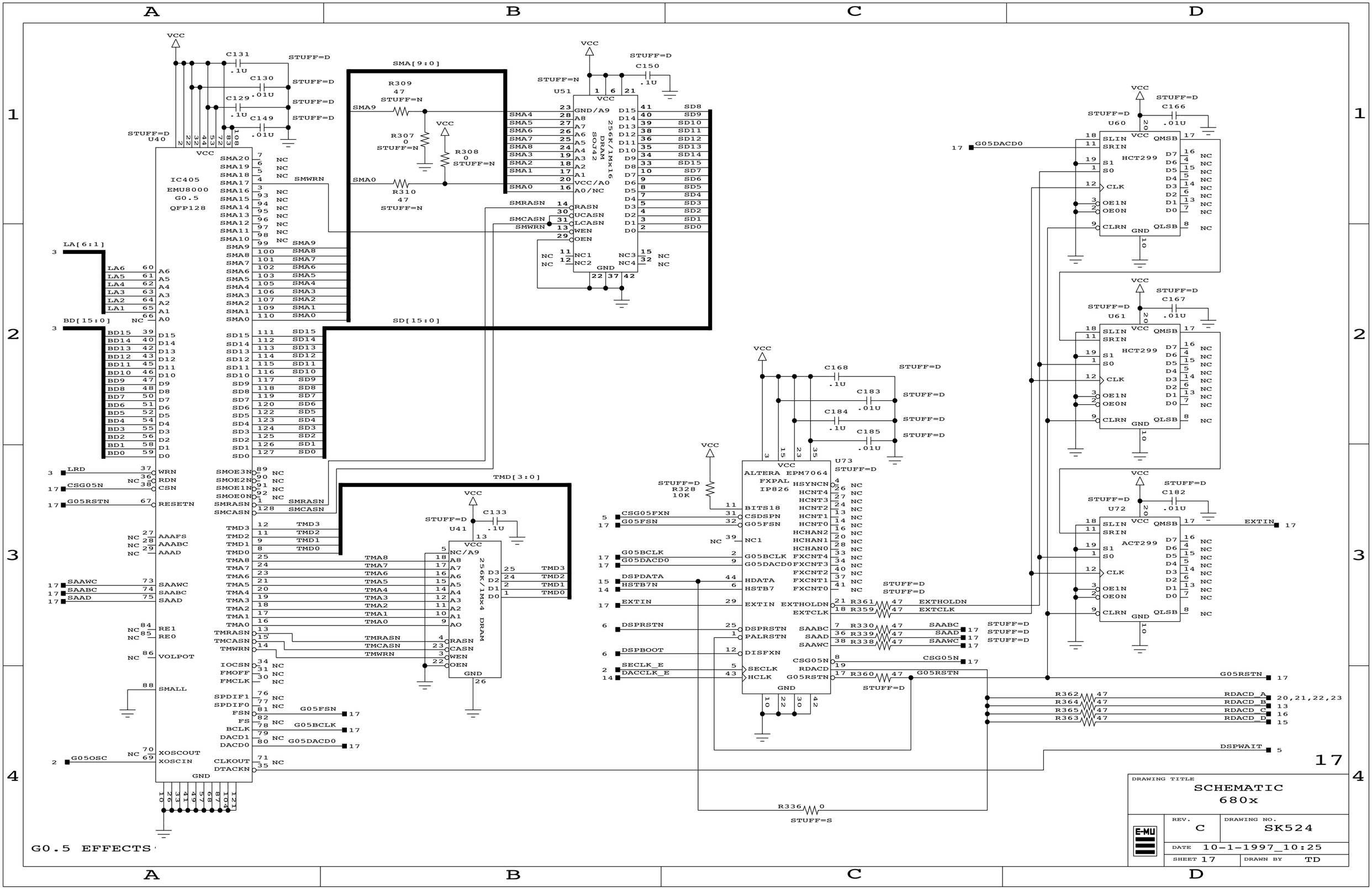
IC405
EMU8000
G0.5
QFP128
U40
U51
256K/1Mx16
DRAM
SOJ42
U41
256K/1Mx4
DRAM
U60
U61
U72
HCT299
ACT299
U73
ALTERA EPM7064
FXPAL
IP826
SMA[9:0]
SD[15:0]
TMD[3:0]
LA[6:1]
BD[15:0]
G0.5 EFFECTS
DRAWING TITLE
SCHEMATIC
680x
REV.
C
DRAWING NO.
SK524
DATE
10-1-1997_10:25
SHEET 17
DRAWN BY
TD
17

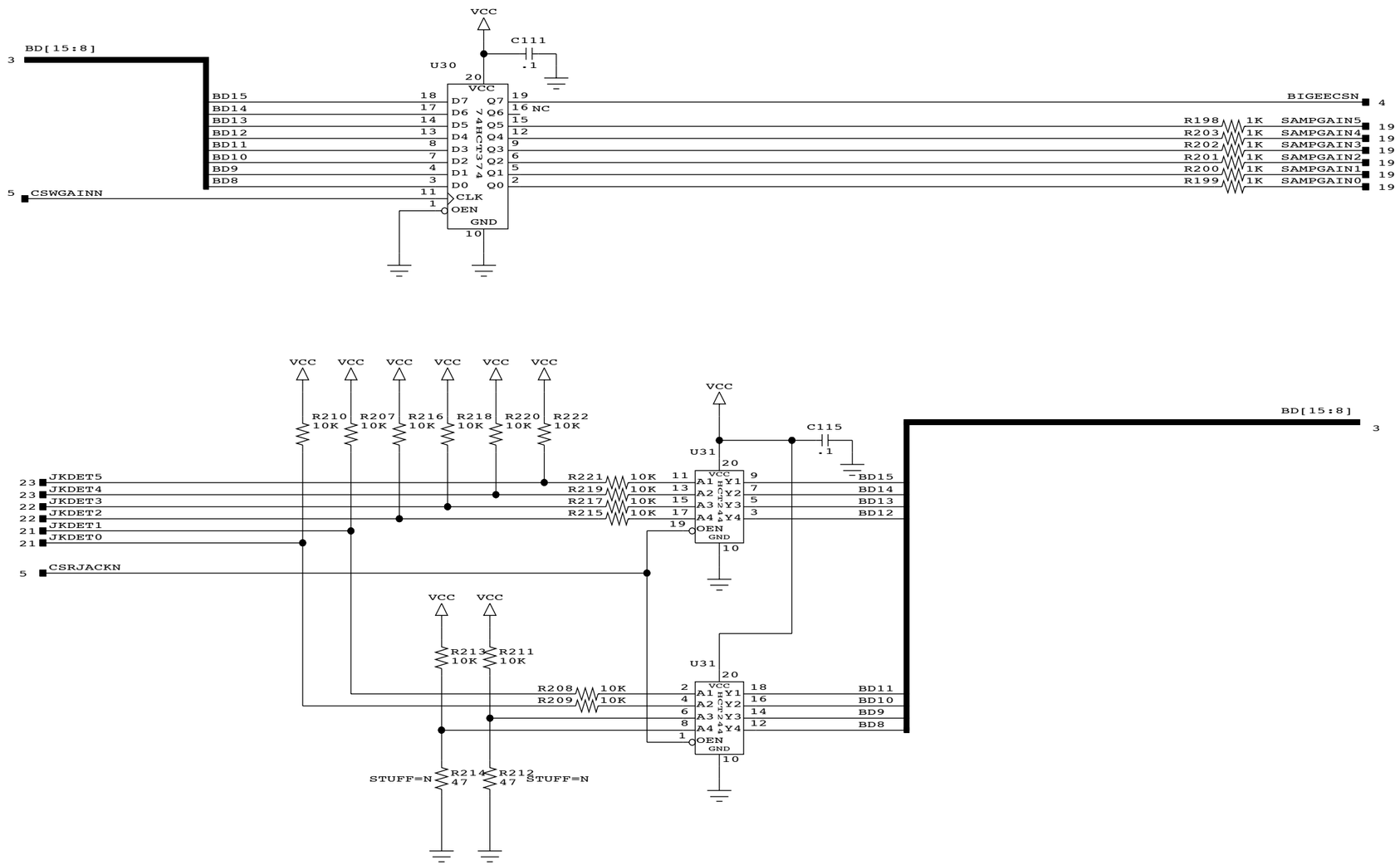

JACK DETECT LATCH
SAMPLE GAIN LATCH

18

DRAWING TITLE	SCHEMATIC 680x
REV. C	DRAWING NO. SK524
DATE	10-1-1997_10:25
SHEET 18	DRAWN BY TD

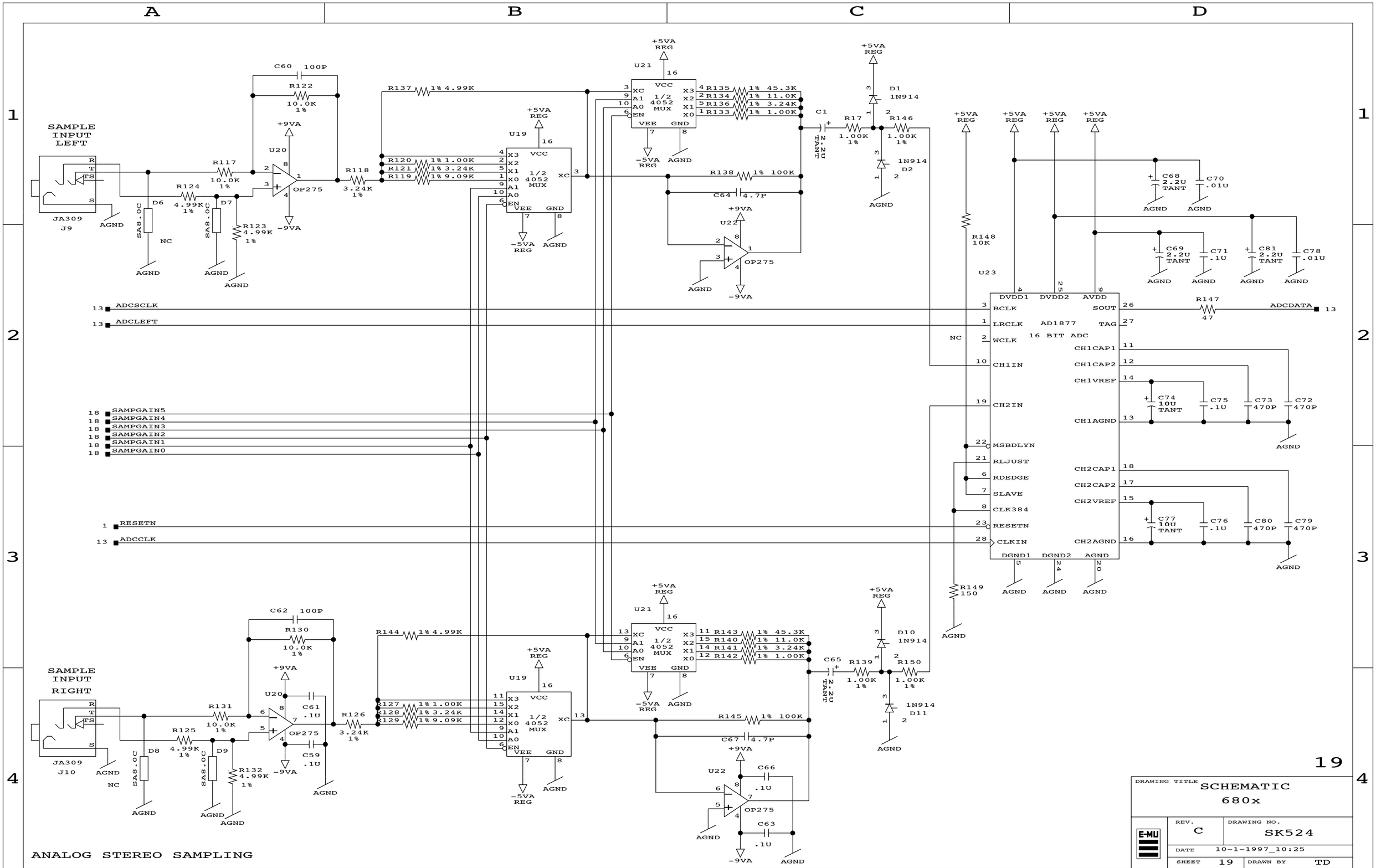
SAMPLE INPUT LEFT
JA309
J9
SAMPLE INPUT RIGHT
JA309
J10
OP275
U20
U22
U19
U21
1/2 4052 MUX
VCC
VEE
GND
+5VA REG
-5VA REG
+9VA
-9VA
AGND
NC
SA8.0C
C60 100P
R122 10.0K 1%
R117 10.0K 1%
R124 4.99K 1%
R123 4.99K 1%
R118 3.24K 1%
R137 1% 4.99K
R120 1% 1.00K
R121 1% 3.24K
R119 1% 9.09K
R138 1% 100K
C64 4.7P
R135 1% 45.3K
R134 1% 11.0K
R136 1% 3.24K
R133 1% 1.00K
C1 2.2U TANT
R17 1.00K 1%
R146 1.00K 1%
D1 1N914
D2 1N914
R148 10K
R149 150
C68 2.2U TANT
C70 .01U
C69 2.2U TANT
C71 .1U
C81 2.2U TANT
C78 .01U
DVDD1
DVDD2
AVDD
AD1877
16 BIT ADC
BCLK
LRCLK
WCLK
CH1IN
CH2IN
MSBDLYN
RLJUST
RDEDGE
SLAVE
CLK384
RESETN
CLKIN
SOUT
TAG
CH1CAP1
CH1CAP2
CH1VREF
CH1AGND
CH2CAP1
CH2CAP2
CH2VREF
CH2AGND
DGND1
DGND2
AGND
R147 47
ADCDATA
C74 10U TANT
C75 .1U
C73 470P
C72 470P
C77 10U TANT
C76 .1U
C80 470P
C79 470P
ADCSCLK
ADCLEFT
SAMPGAIN5
SAMPGAIN4
SAMPGAIN3
SAMPGAIN2
SAMPGAIN1
SAMPGAIN0
RESETN
ADCCLK
C62 100P
R130 10.0K 1%
R131 10.0K 1%
R125 4.99K 1%
R132 4.99K 1%
R126 3.24K 1%
R144 1% 4.99K
R127 1% 1.00K
R128 1% 3.24K
R129 1% 9.09K
R145 1% 100K
C67 4.7P
R143 1% 45.3K
R140 1% 11.0K
R141 1% 3.24K
R142 1% 1.00K
C65 2.2U TANT
R139 1.00K 1%
R150 1.00K 1%
D10 1N914
D11 1N914
C61 .1U
C59 .1U
C66 .1U
C63 .1U
19
DRAWING TITLE
SCHEMATIC
680x
REV.
C
DRAWING NO.
SK524
DATE
10-1-1997_10:25
SHEET
19
DRAWN BY
TD
E-MU
ANALOG STEREO SAMPLING

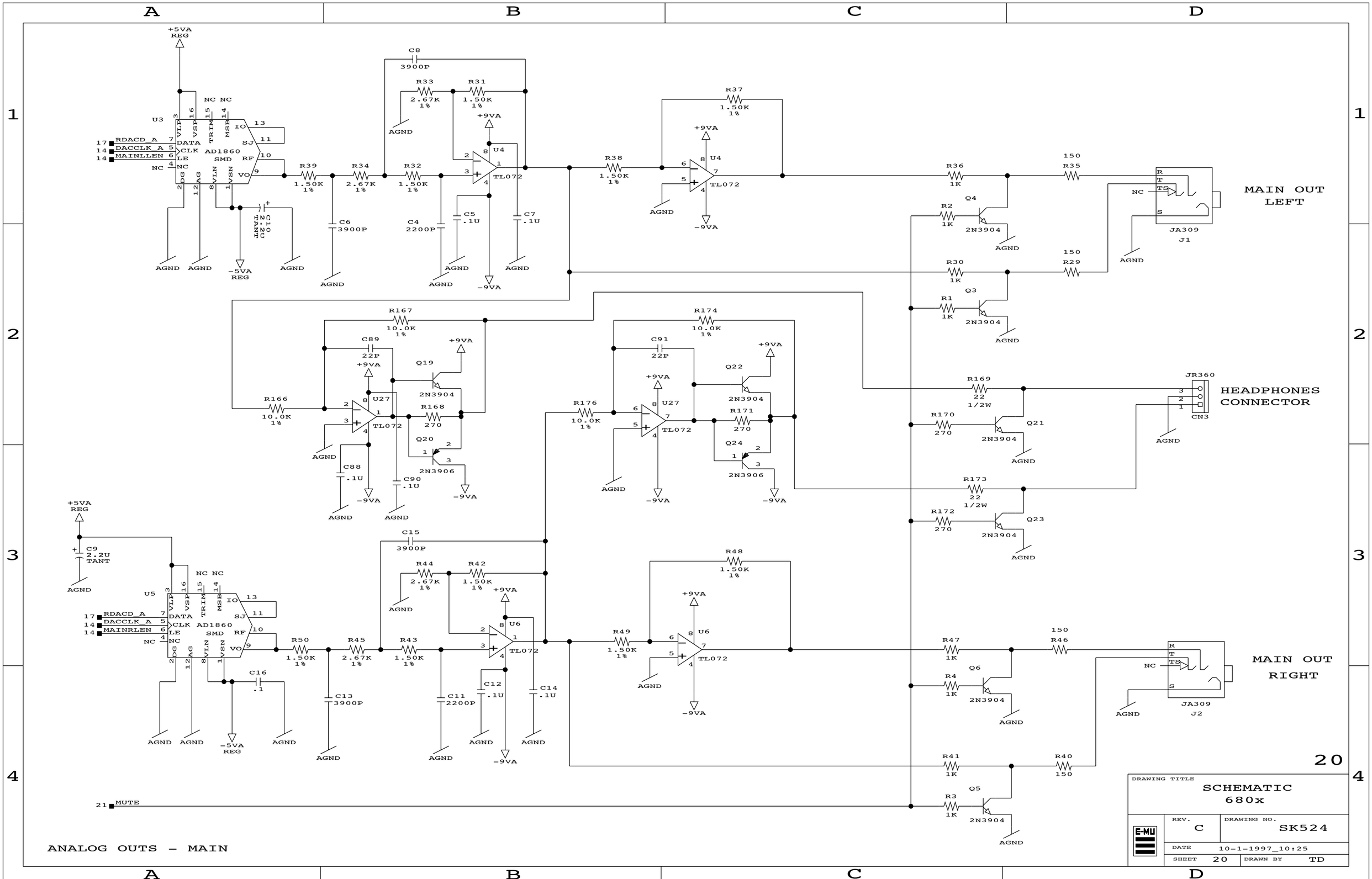
A
B
C
D
1
2
3
4
+5VA REG
U3
AD1860
RDACD_A
DACCLK_A
MAINLLEN
DATA
CLK
LE
NC
VLP
VSP
TRIM
MSB
IO
SJ
RF
VO
VLN
VSN
SMD
DG
AG
C10 2.2U TANT
-5VA REG
AGND
C8 3900P
R33 2.67K 1%
R31 1.50K 1%
R39 1.50K 1%
R34 2.67K 1%
R32 1.50K 1%
C6 3900P
C4 2200P
C5 .1U
C7 .1U
U4
TL072
+9VA
-9VA
R37 1.50K 1%
R38 1.50K 1%
R36 1K
R35 150
R2 1K
Q4
2N3904
R30 1K
R29 150
R1 1K
Q3
JA309
J1
MAIN OUT LEFT
R167 10.0K 1%
C89 22P
Q19
2N3904
R166 10.0K 1%
U27
R168 270
Q20
2N3906
C88 .1U
C90 .1U
R174 10.0K 1%
C91 22P
Q22
R176 10.0K 1%
R171 270
Q24
R169 22 1/2W
R170 270
Q21
JR360
CN3
HEADPHONES CONNECTOR
R173 22 1/2W
R172 270
Q23
C9 2.2U TANT
C15 3900P
R44 2.67K 1%
R42 1.50K 1%
R50 1.50K 1%
R45 2.67K 1%
R43 1.50K 1%
C13 3900P
C11 2200P
C12 .1U
C14 .1U
C16 .1
U5
U6
R48 1.50K 1%
R49 1.50K 1%
R47 1K
R46 150
R4 1K
Q6
JA309
J2
MAIN OUT RIGHT
R41 1K
R40 150
R3 1K
Q5
21 MUTE
ANALOG OUTS – MAIN
20
DRAWING TITLE
SCHEMATIC
680x
E-MU
REV. C
DRAWING NO. SK524
DATE 10-1-1997_10:25
SHEET 20
DRAWN BY TD

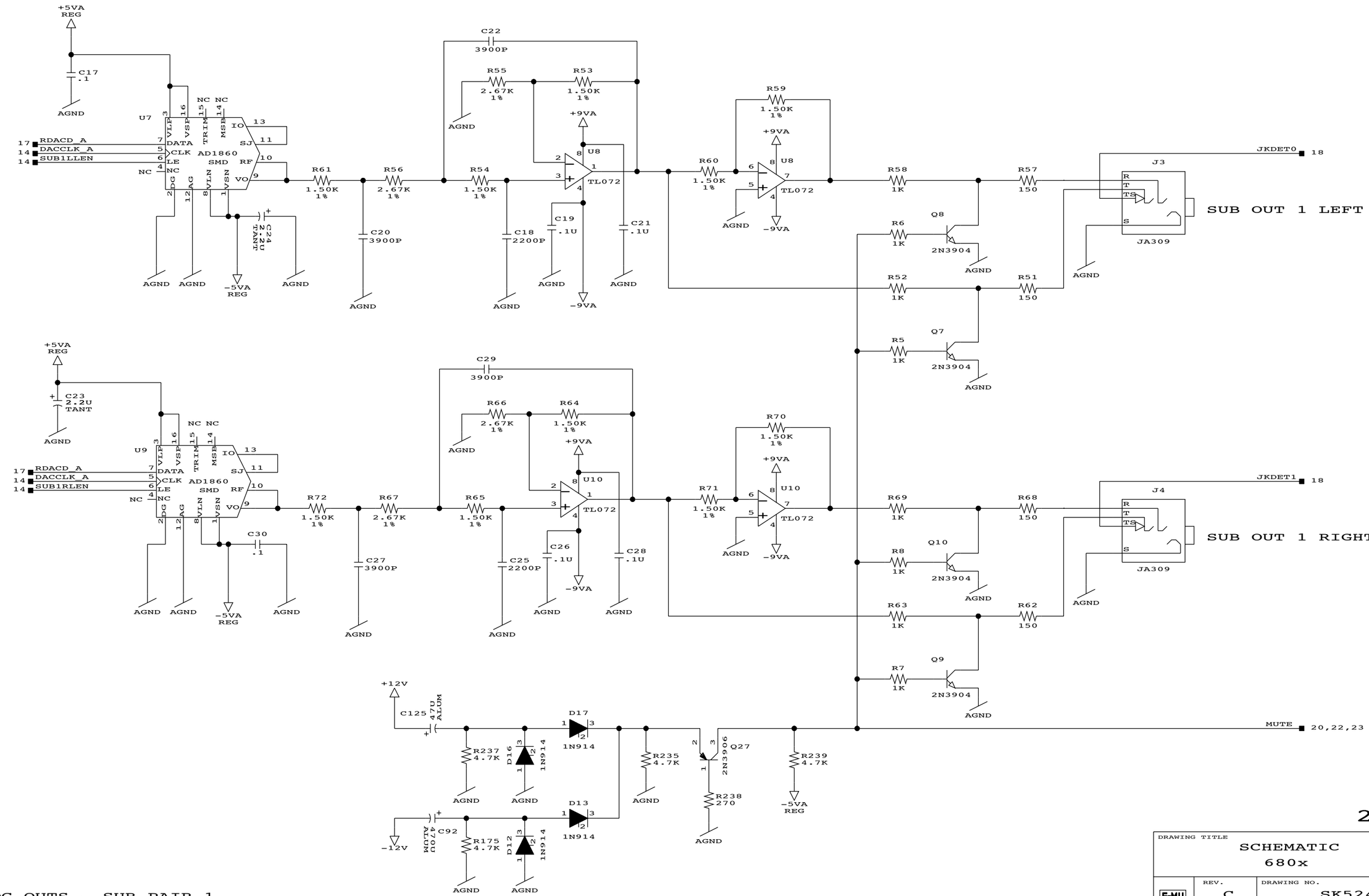

ANALOG OUTS - SUB PAIR 1
MUTE CIRCUIT

21

DRAWING TITLE	SCHEMATIC 680x
REV.	C
DRAWING NO.	SK524
DATE	10-1-1997_10:25
SHEET	21
DRAWN BY	TD

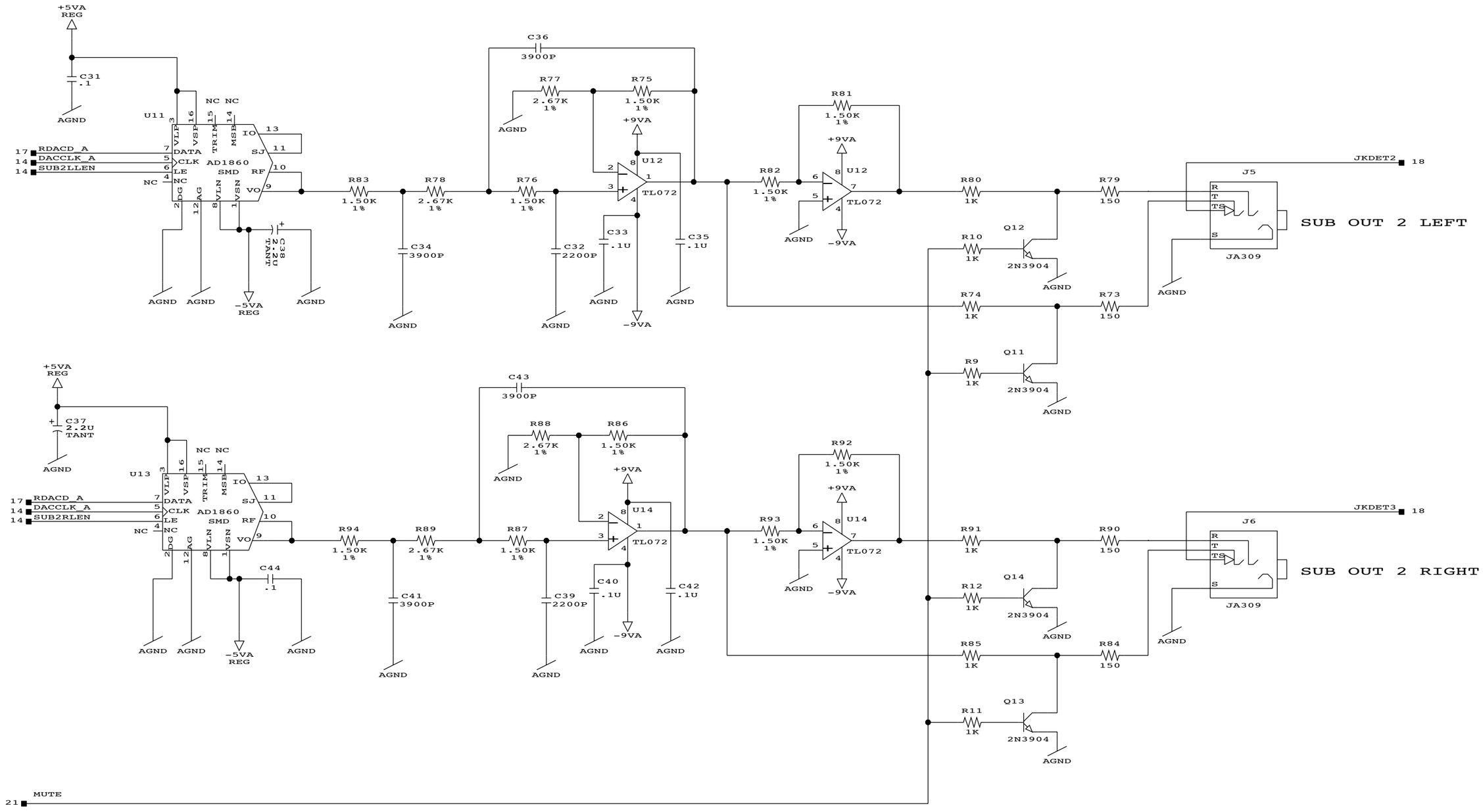

22

DRAWING TITLE
SCHEMATIC
680x

E-MU

REV.	DRAWING NO.
C	SK524
DATE 10-1-1997_10:26	
SHEET 22	DRAWN BY TD

ANALOG OUTS - SUB PAIR 2

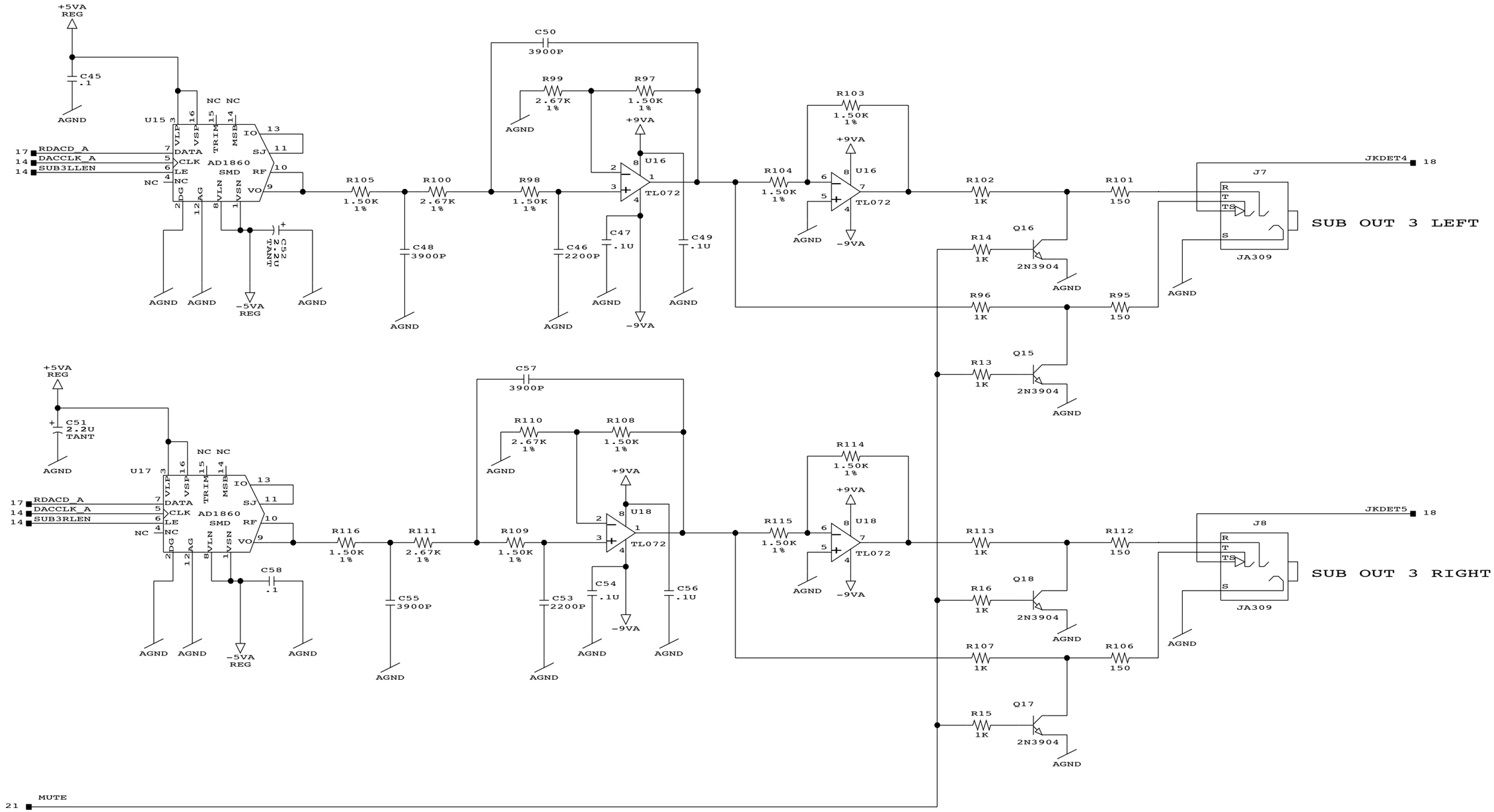

23

DRAWING TITLE
SCHEMATIC
680x

E-MU

REV.	DRAWING NO.
C	SK524
DATE 10-1-1997_10:26	
SHEET 23	DRAWN BY TD

ANALOG OUTS – SUB PAIR 3

SHEET #	CIRCUIT FUNCTIONS
1	POWER SUPPLY CONNECTIONS, POWER-UP RESET
2	CLOCK GENERATION
3	68EC020 MICROPROCESSOR, ADDRESS AND DATA BUFFERS
4	INTERRUPT CONTROLLER, TIMERS, EEPROM, MISC READ LATCH
5	ADDRESS DECODING, NMI SWITCH
6	CONTROL REGISTERS
7	MICROPROCESSOR ROM & RAM
8	SCSI INTERFACE, DUART
9	ASCII & AES/EBU I/O BREAKAWAY
10	MIDI INTERFACE, FLOPPY DRIVE INTERFACE
11	K-CHIP KEYBOARD & BUTTON SCANNER
12	FRONT PANEL INTERFACE
13	SAMPLING & RESAMPLING CONTROL
14	H-CHIPS 2 & 3
15	DSP CONNECTORS, DIGITAL IN/OUT
16	EXPANSION AND POLYPHONY CONNECTORS
17	EFFECTS ENGINE
18	SAMPLE GAIN LATCH, JACK DETECT
19	ANALOG SAMPLING
20	MAIN AUDIO OUTS
21	SUB AUDIO OUT PAIR 1, MUTE CONTROL
22	SUB AUDIO OUT PAIR 2
23	SUB AUDIO OUT PAIR 3
24	CCFL BACKLIGHT INTENSITY BREAKAWAY

STUFFING OPTION LEGEND:

STUFF=N COMPONENT NOT STUFFED
STUFF=D COMPONENT STUFFED ON DELUXE MODELS ONLY
STUFF=S COMPONENT STUFFED ON STANDARD MODELS ONLY
STUFF=CF COMPONENT STUFFED FOR FIXED CCFL BACKLIGHT
STUFF=CV COMPONENT STUFFED FOR VARIABLE CCFL BACKLIGHT
STUFF=A COMPONENT STUFFED ON AES/EBU BREAKAWAY BOARD
STUFF=AN COMPONENT NOT STUFFED ON AES/EBU BREAKAWAY

REVISIONS

ECO	REV	DESCRIPTION	DATE	APPR.
3039	A	FIRST PRODUCTION RELEASE	9/10/96	TD
3091	B	REDUCED BACKLIGHT INTENSITY	12/20/96	TD
3214	C	LCD CONTRAST IMPROVED		

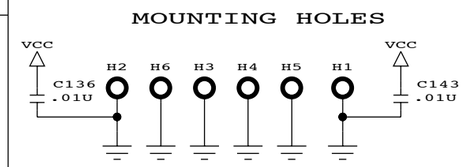

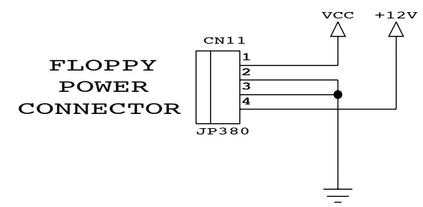

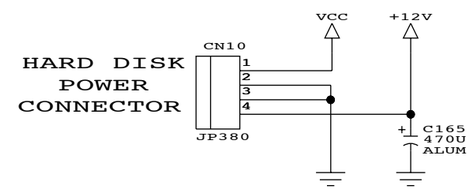

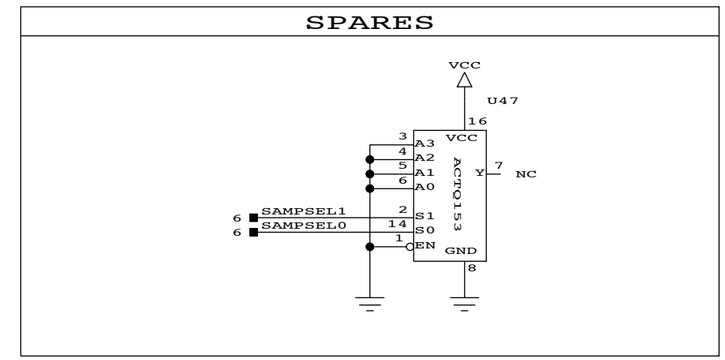

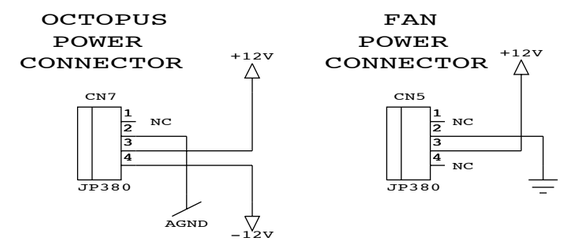

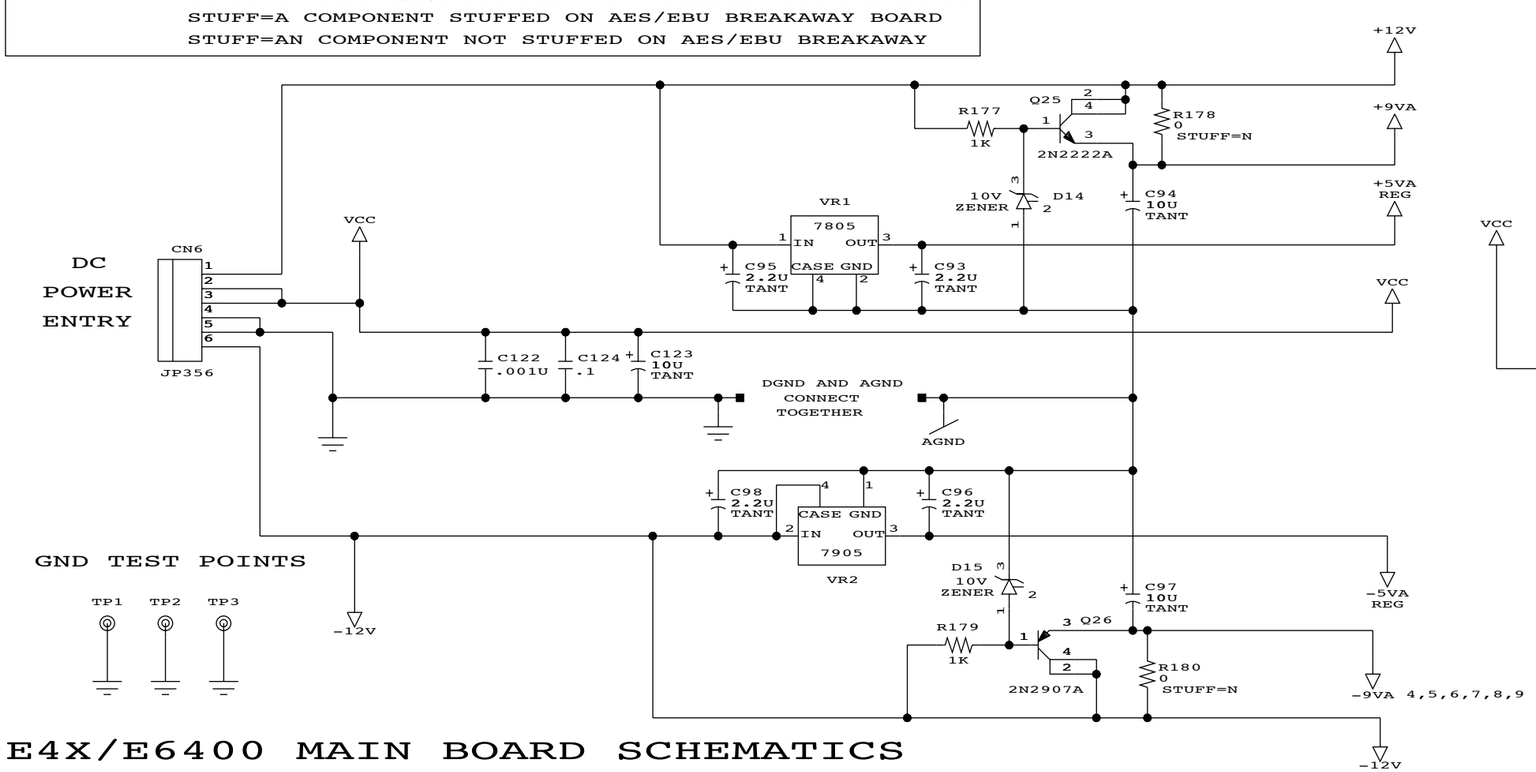

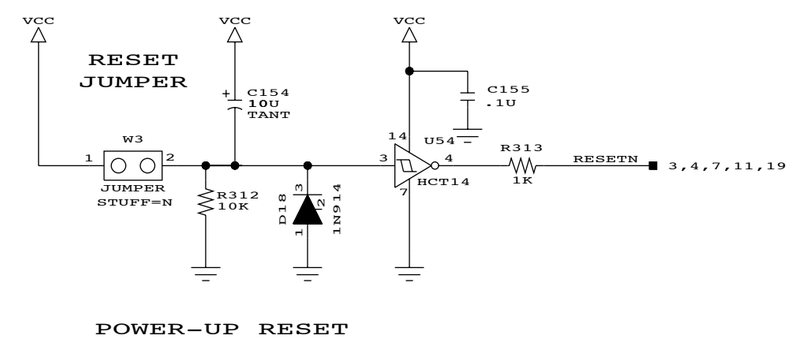

POWER-UP RESET

E4X/E6400 MAIN BOARD SCHEMATICS

E-mu Systems, Inc.
applied magic for the arts
1600 Green Hills Road
Scotts Valley, California 95066

DRAWING TITLE: SCHEMATIC 680x

REV. C | DRAWING NO. SK524

DATE 10-15-1997_16:25 | CHECK

SHEET: 1 OF 24 | DRAWN TD | APPR TD

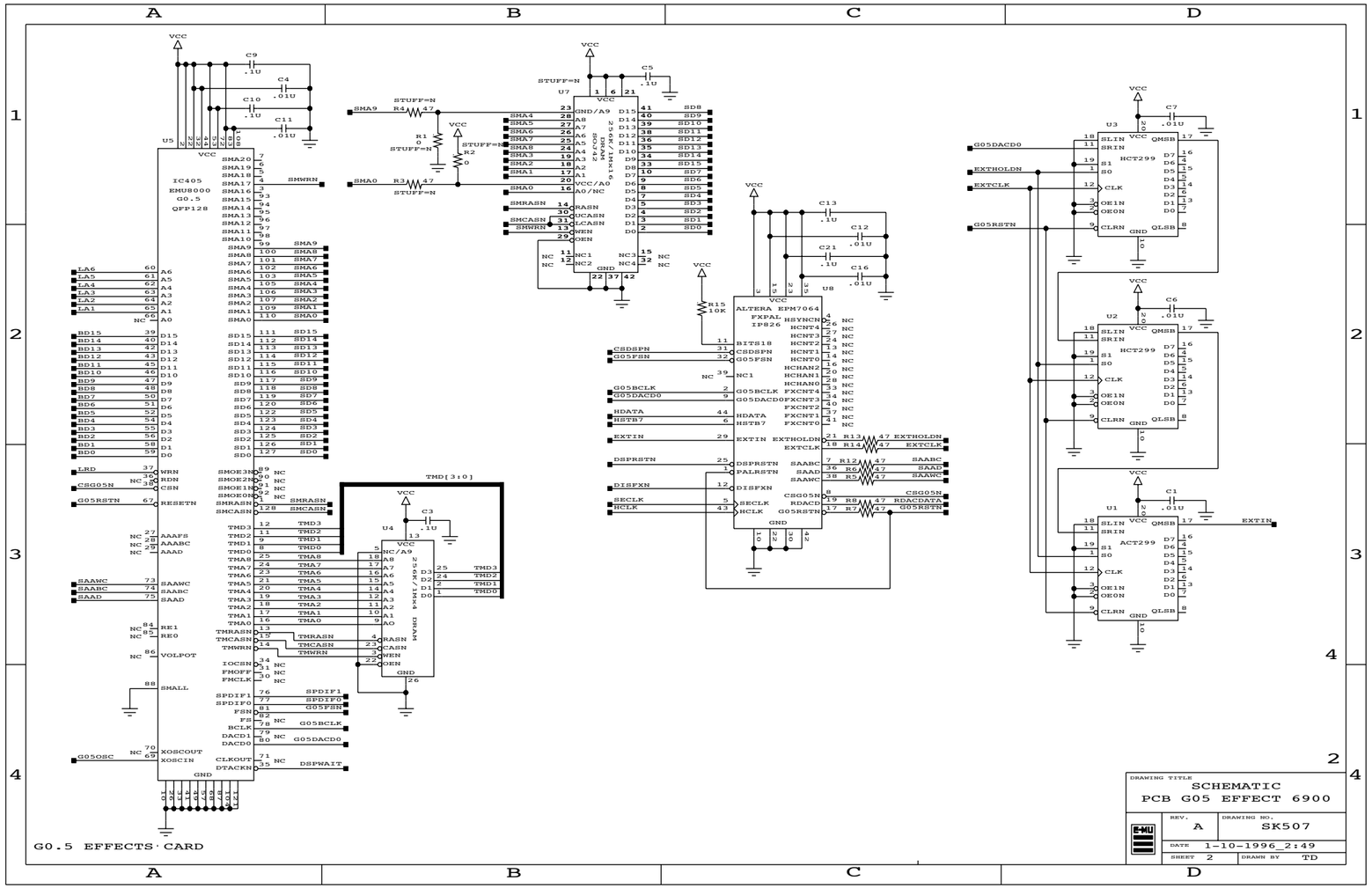

DRAWING TITLE
SCHEMATIC
PCB G05 EFFECT 6900

REV. A	DRAWING NO. SK507
DATE 1-10-1996 2:49	
SHEET 2	DRAWN BY TD

REVISIONS				
ECO	REV	DESCRIPTION	DATE	APPR.
2895	A	PRODUCTION RELEASE	1/9/96	TD

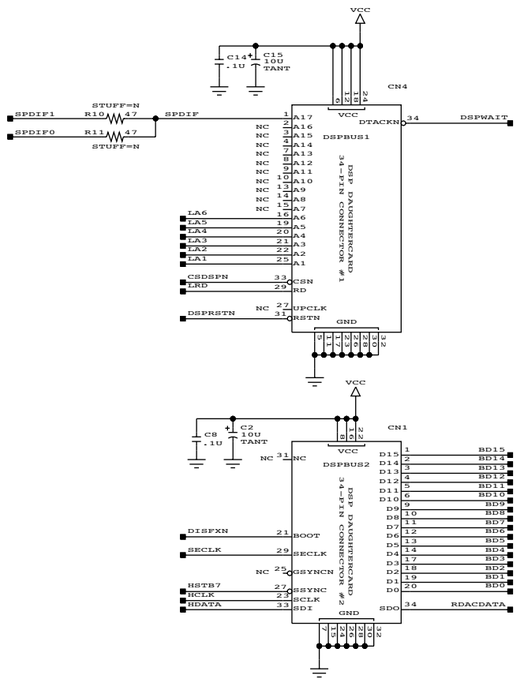

CLOCK DOUBLER
512FS TO 1024FS

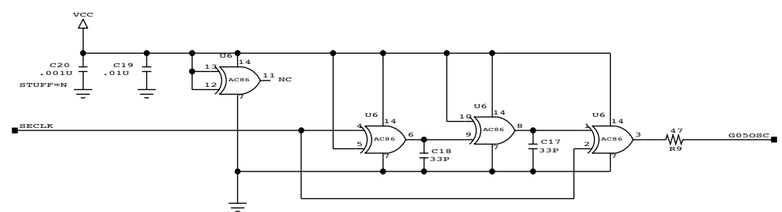

G0.5 EFFECTS CARD

E-mu Systems, Inc.
applied magic for the arts
1600 Green Hills Road
Scotts Valley, California 95066

DRAWING TITLE: SCHEMATIC PCB G05 EFFECT 6900

REV. A | DRAWING NO. SK507

DATE 1-10-1996_2:48 | CHECK

SHEET: 1 OF 2 | DRAWN TD | APPR TD

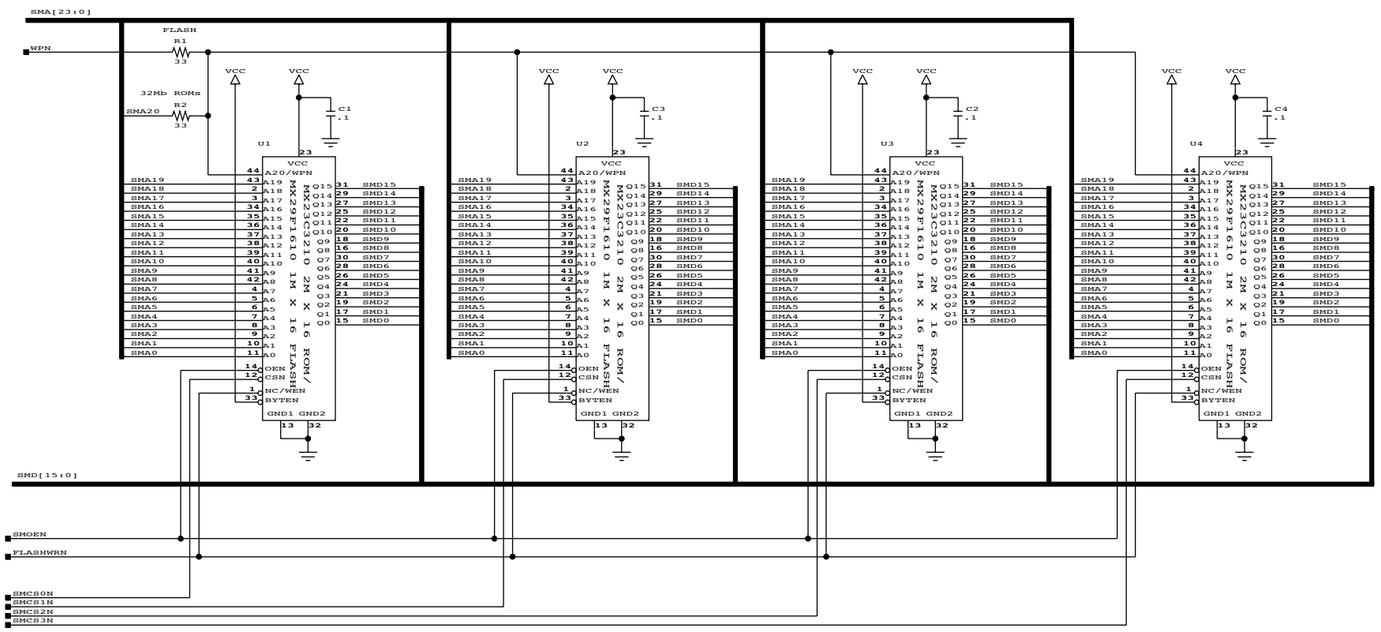

INSTALL MX23C3210 MASKED ROMS FOR 8M X 16 (16 MB) OF MEMORY
INSTALL MX23C1610 MASKED ROMS FOR 4M X 16 (8 MB) OF MEMORY
INSTALL MX29F1610 FLASH ROMS FOR 4M X 16 (8 MB) OF FLASH MEMORY

2

DRAWING TITLE	16MB SOUND ROM SIMM FOR E4/e64 PRODUCTS
REV.	A
DRAWING NO.	SK535
DATE	4-16-1997_12:19
SHEET	2
DRAWN BY	TD

REVISIONS				
ECO	REV	DESCRIPTION	DATE	APPR.
3146	A	PRODUCTION RELEASE		

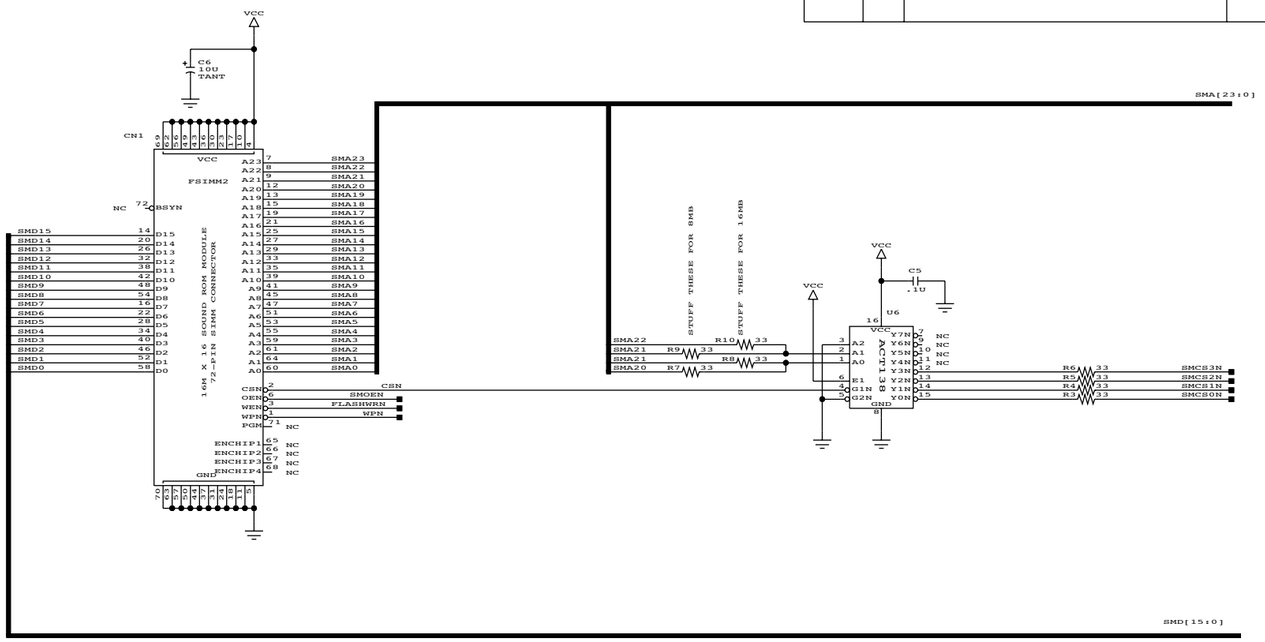

1

E-mu Systems, Inc.
applied magic for the arts
1600 Green Hills Road
Scotts Valley, California 95066

DRAWING TITLE	16MB SOUND ROM SIMM FOR E4/e64 PRODUCTS
REV. A	DRAWING NO. SK535
DATE 4-16-1997_12:18	CHECK
SHEET: 1 OF 2	DRAWN / APPR TD

REVISIONS					
KEY	REV	ECO	DESCRIPTION	APVD	DATE
	A	3424	PRODUCTION RELEASE	TD	2/99
	B	3434	ADDED SHT 2 REWORK	TD	4/99
	C	3452	REMOVED SHT 2 REWORK	TD	4/99
	D.1	3498	ADDED SHT 2 & 3 REWORK	TD	12/99
	D.2	3534	BOM CHANGE	TD	12/99

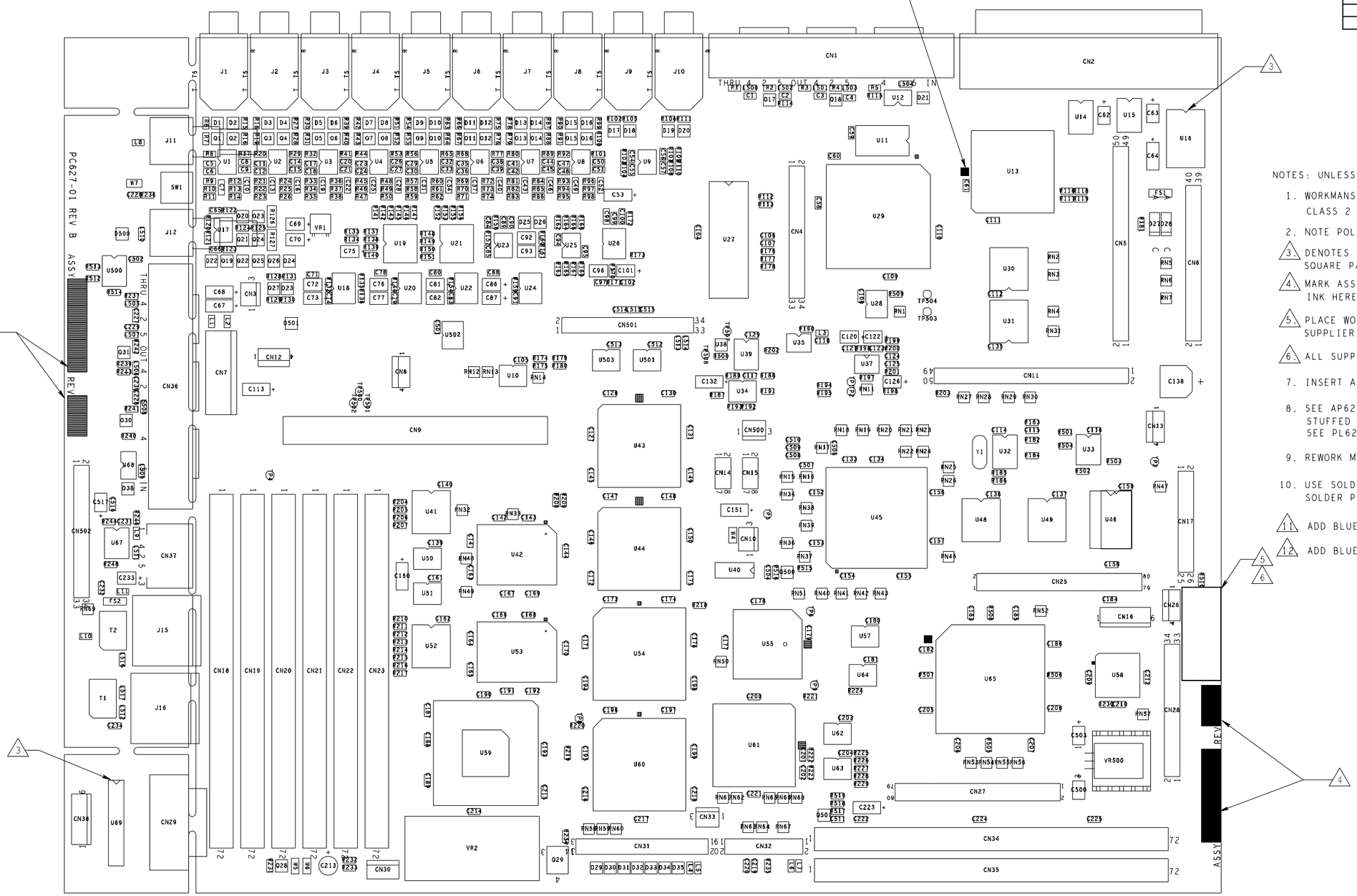

NOTES: UNLESS OTHERWISE SPECIFIED:

1. WORKMANSHIP SHALL BE IN ACCORDANCE WITH IPC-A-610A CLASS 2 REQUIREMENTS.
2. NOTE POLARITY OF COMPONENTS WHEN INDICATED.
3. DENOTES PIN 1 END OF IC'S, SOCKETS AND CONNECTORS. SQUARE PAD INDICATES PIN 1.
4. MARK ASSY NO. AND CURRENT REV LEVEL WITH INDELIBLE INK HERE.
5. PLACE WORK ORDER AND PART NUMBER LABEL WITH SUPPLIER ID OR LOGO IN THIS AREA.
6. ALL SUPPLIER PROCESS/TEST/Q.C. STAMPS IN THIS AREA.
7. INSERT ASSEMBLED BOARD INTO CONDUCTIVE BAG.
8. SEE AP627-XX BOM FOR REFERENCE DESIGNATORS OF STUFFED AND UNSTUFFED COMPONENTS. FOR AP627-04 SEE PL627-04.
9. REWORK MUST CONFORM TO IPC GUIDELINES IPC-R-700C.
10. USE SOLDER PASTE MASTER AW627-01 REV B FOR SOLDER PASTE SCREEN.
11. ADD BLUE WIRE REWORK TO VERSION "-04" ONLY.
12. ADD BLUE WIRE REWORK TO ALL VERSIONS.

DO NOT SCALE DRAWING

DIMENSIONS ARE IN INCHES UNLESS OTHERWISE SPECIFIED

	MM	INCH
.XX	+/-	+/- .01
.XXX	+/-	+/- .005

ANGLES ± FRACTIONS ±

MATERIAL:

FINISH:

APPROVALS		DATE
DRAWN	D GROSS	11/98
CHECKED	TD	2/99
APPROVED	JS	2/99

E-MU SYSTEMS INC — E-mu Systems, Inc. Scotts Valley, CA

REFERENCE DOC
PCBA MAIN
E4XT ULTRA RACK

SIZE D — DWG. NO. AP627 — REV. D.2

SCALE: 1/1 — SHEET 1 OF 3

SHEET #	CIRCUIT FUNCTIONS
1	POWER SUPPLY CONNECTIONS, POWER-UP RESET
2	CLOCK GENERATION
3	5206 COLDFIRE MICROPROCESSOR, ADDRESS AND DATA BUFFERS
4	PROCESSOR DEBUG CONNECTORS
5	REPROGRAMMABLE CONTROL FPGA
6	MICROPROCESSOR MEMORY, MISC PAL
7	MAIN MIDI INTERFACE, WORD CLOCK PLL, I/O CONNECTOR
8	SCSI INTERFACE
9	BREAKAWAY BOARD: ASCII, AES I/O, WORD CLOCKS, MIDI B
10	FLOPPY DRIVE INTERFACE
11	FRONT PANEL BUTTON SCANNER
12	FRONT PANEL INTERFACE
13	G2.0 CHIPS
14	SOUND MEMORY BUFFERS, DRAM SIMMS
15	SOUND ROM SIMMS
16	H1.5 CHIPS 0 & 1
17	H1.5 CHIPS 2 & 3
18	G0.5 EFFECTS ENGINE, AES AUDIO RECEIVER, SAMPLING FIFO
19	ANALOG SAMPLING
20	MAIN AUDIO OUTS, HEADPHONES, DEPOP CONTROL
21	SUB AUDIO OUT 1 PAIR, JACK DETECT LATCH
22	SUB AUDIO OUT 2 PAIR
23	SUB AUDIO OUT 3 PAIR
24	EXPANSION CONNECTORS, IDE

MOUNTING HOLES

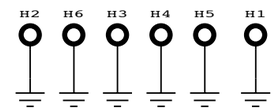

REVISIONS

ECO	REV	DESCRIPTION	DATE	APPR.
	D.2	LATEST REV OF SK627	9/1/99	TD
	A.1	SK10485: 64-PIN FLOPPY CONTROLLER	9/30/99	TD

POWER-UP RESET

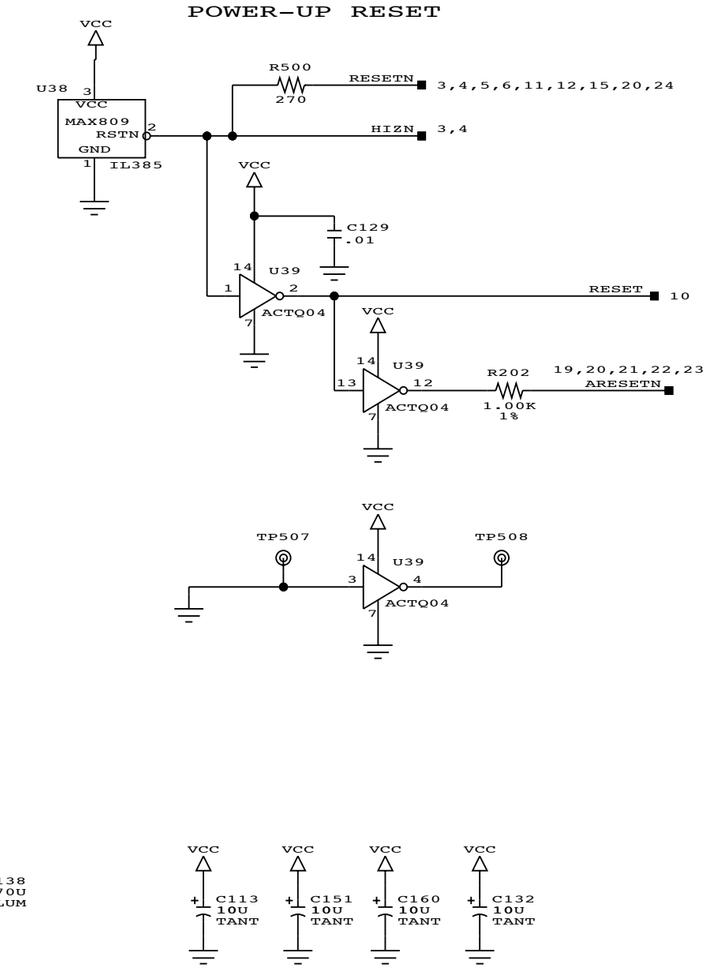

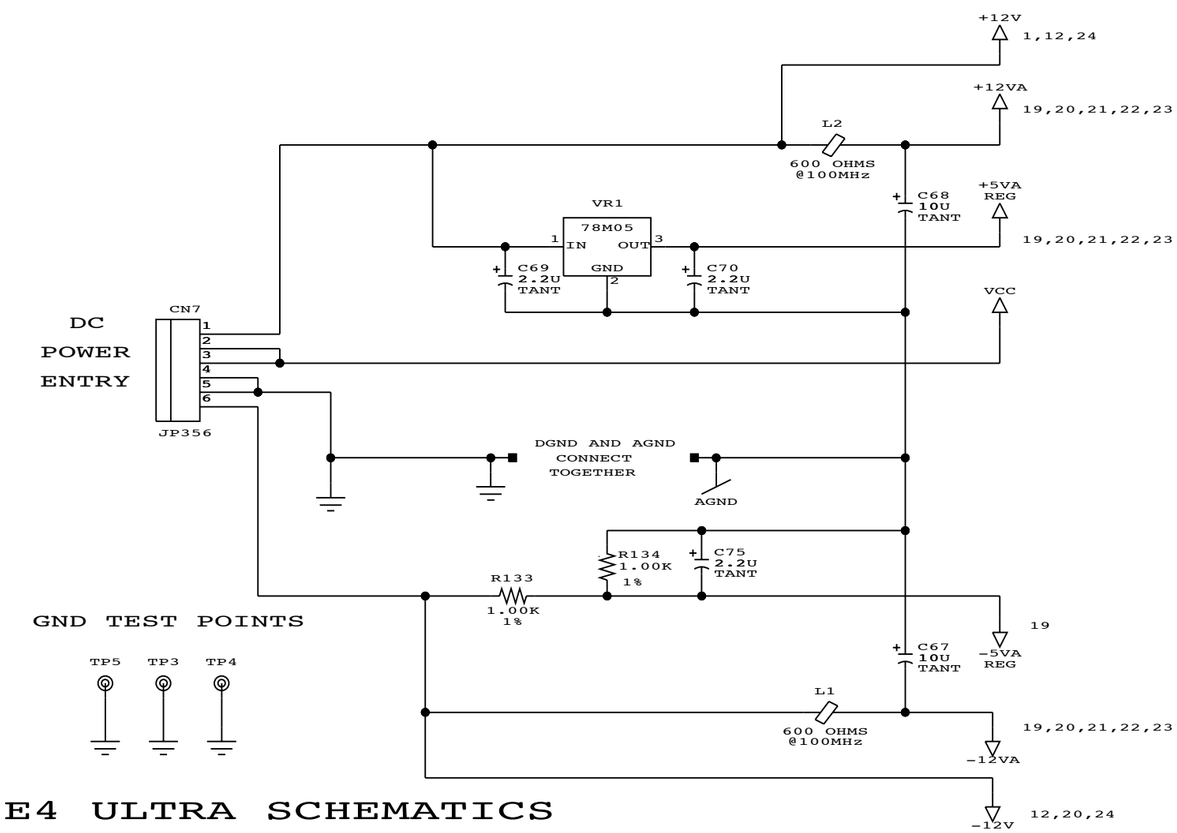

All capacitors in uF unless otherwise noted

1

E-mu Systems, Inc.
applied magic for the arts
1600 Green Hills Road
Scotts Valley, California 95066

DRAWING TITLE: SCHEMATIC
MAIN E4 ULTRA RACK V2

REV. A.1
DRAWING NO. SK10485
DATE 10-5-1999_16:01
CHECK TD
SHEET: 1 OF 24
DRAWN TD
APPR TD

E4 ULTRA SCHEMATICS

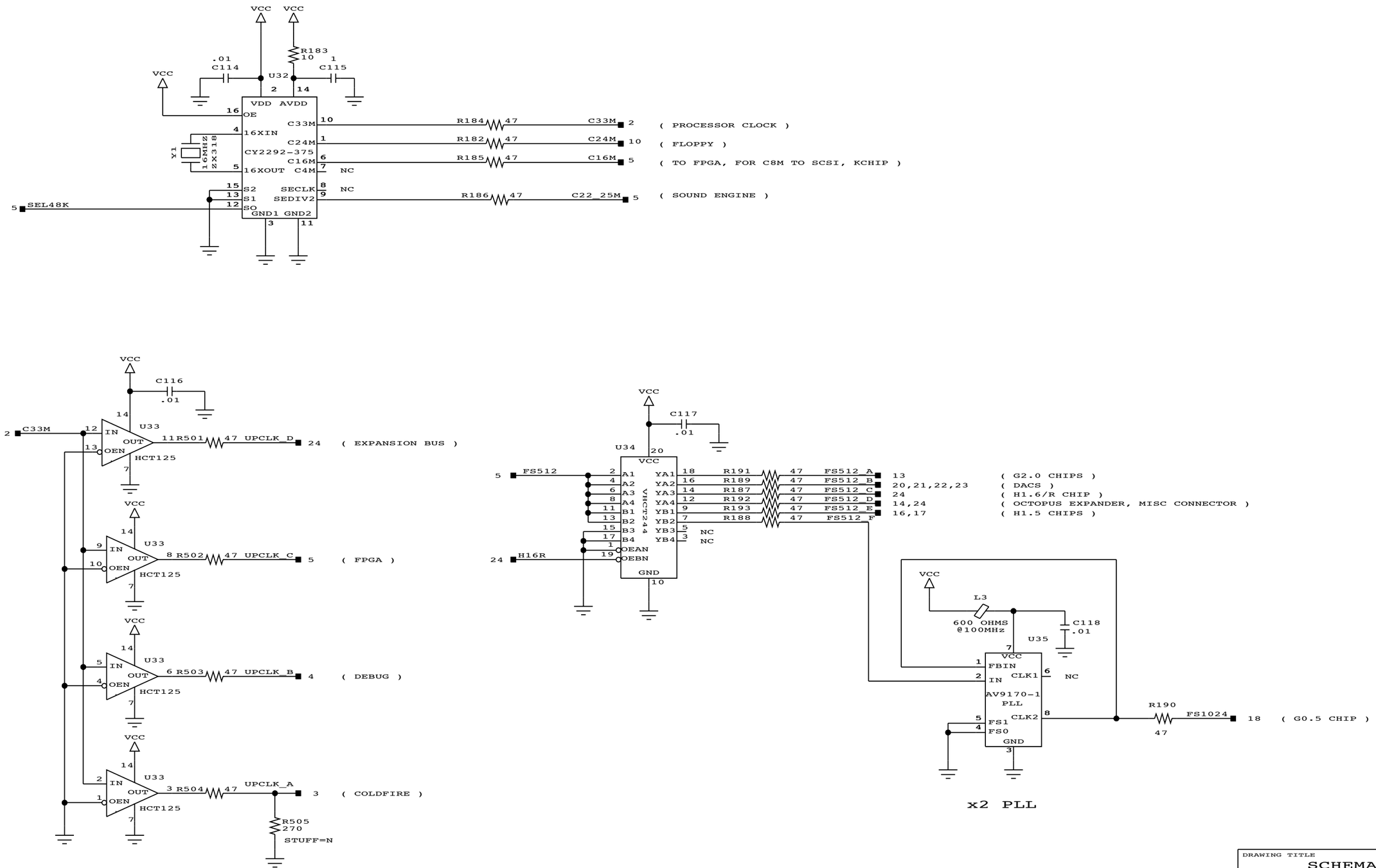

CLOCK GENERATION

2

DRAWING TITLE
SCHEMATIC
MAIN E4 ULTRA RACK V2

E-MU	REV. A.1	DRAWING NO. SK10485
	DATE 10-5-1999_16:01	
	SHEET 2	DRAWN BY TD

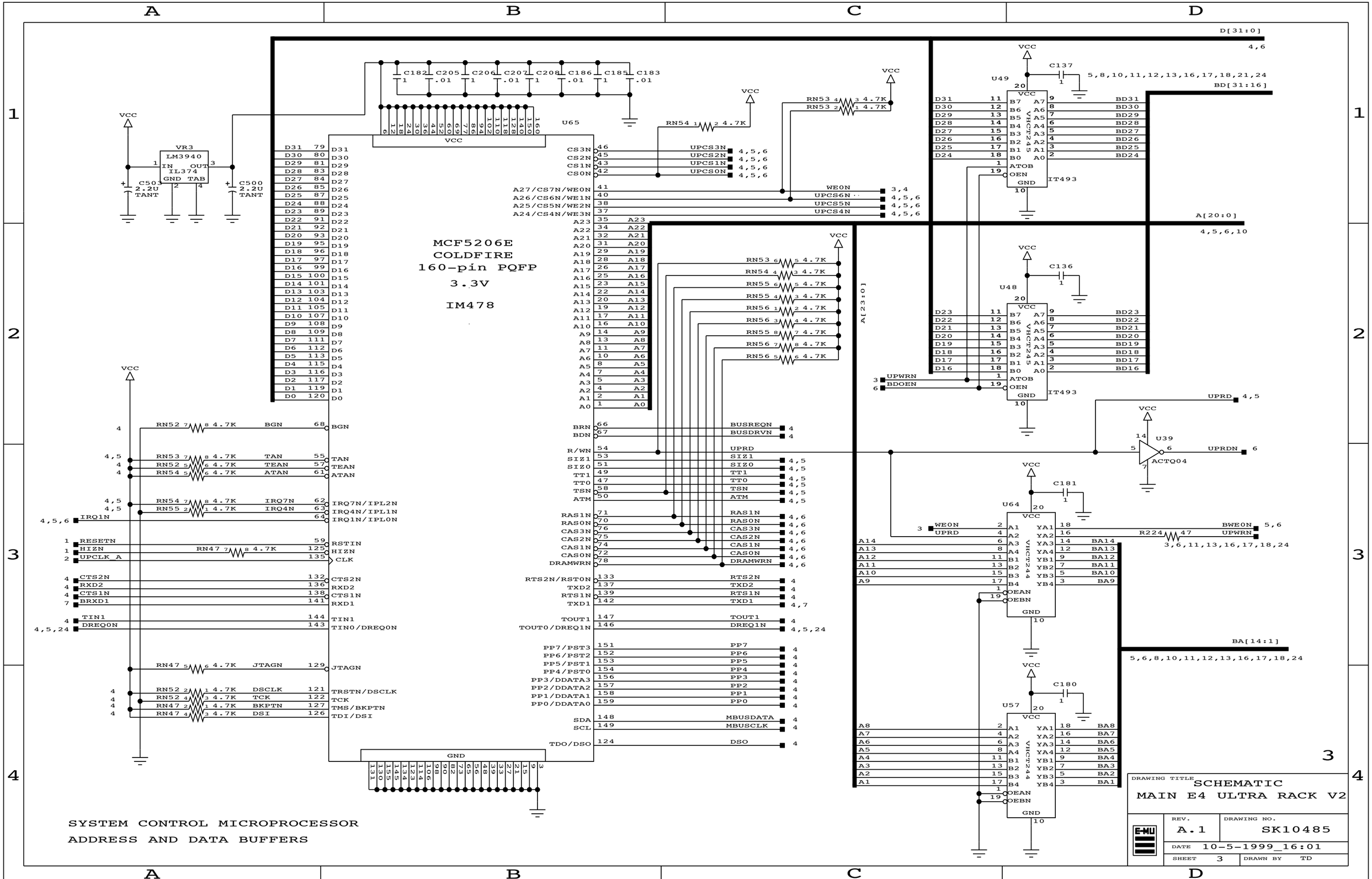
MCF5206E
COLDFIRE
160-pin PQFP
3.3V
IM478
U65
VR3
LM3940
IL374
C503 2.2U TANT
C500 2.2U TANT
C182 1
C205 .01
C206 1
C207 .01
C208 1
C186 .01
C185 1
C183 .01
RN54 4.7K
RN53 4.7K
U49
U48
U39
ACTQ04
U64
U57
VHCT245
VHCT244
IT493
C137 1
C136 1
C181 1
C180 1
R224 47
D[31:0]
BD[31:16]
A[20:0]
A[23:0]
BA[14:1]
UPCS3N
UPCS2N
UPCS1N
UPCS0N
WE0N
UPCS6N
UPCS5N
UPCS4N
UPWRN
BDOEN
UPRD
UPRDN
BWE0N
BUSREQN
BUSDRVN
SIZ1
SIZ0
TT1
TT0
TSN
ATM
RAS1N
RAS0N
CAS3N
CAS2N
CAS1N
CAS0N
DRAMWRN
RTS2N
TXD2
RTS1N
TXD1
TOUT1
DREQ1N
PP7
PP6
PP5
PP4
PP3
PP2
PP1
PP0
MBUSDATA
MBUSCLK
DSO
BGN
TAN
TEAN
ATAN
IRQ7N
IRQ4N
IRQ1N
RESETN
HIZN
UPCLK_A
CLK
CTS2N
RXD2
CTS1N
RXD1
TIN1
DREQ0N
JTAGN
DSCLK
TCK
BKPTN
DSI
GND
SYSTEM CONTROL MICROPROCESSOR
ADDRESS AND DATA BUFFERS
DRAWING TITLE
SCHEMATIC
MAIN E4 ULTRA RACK V2
REV. A.1
DRAWING NO. SK10485
DATE 10-5-1999_16:01
SHEET 3
DRAWN BY TD

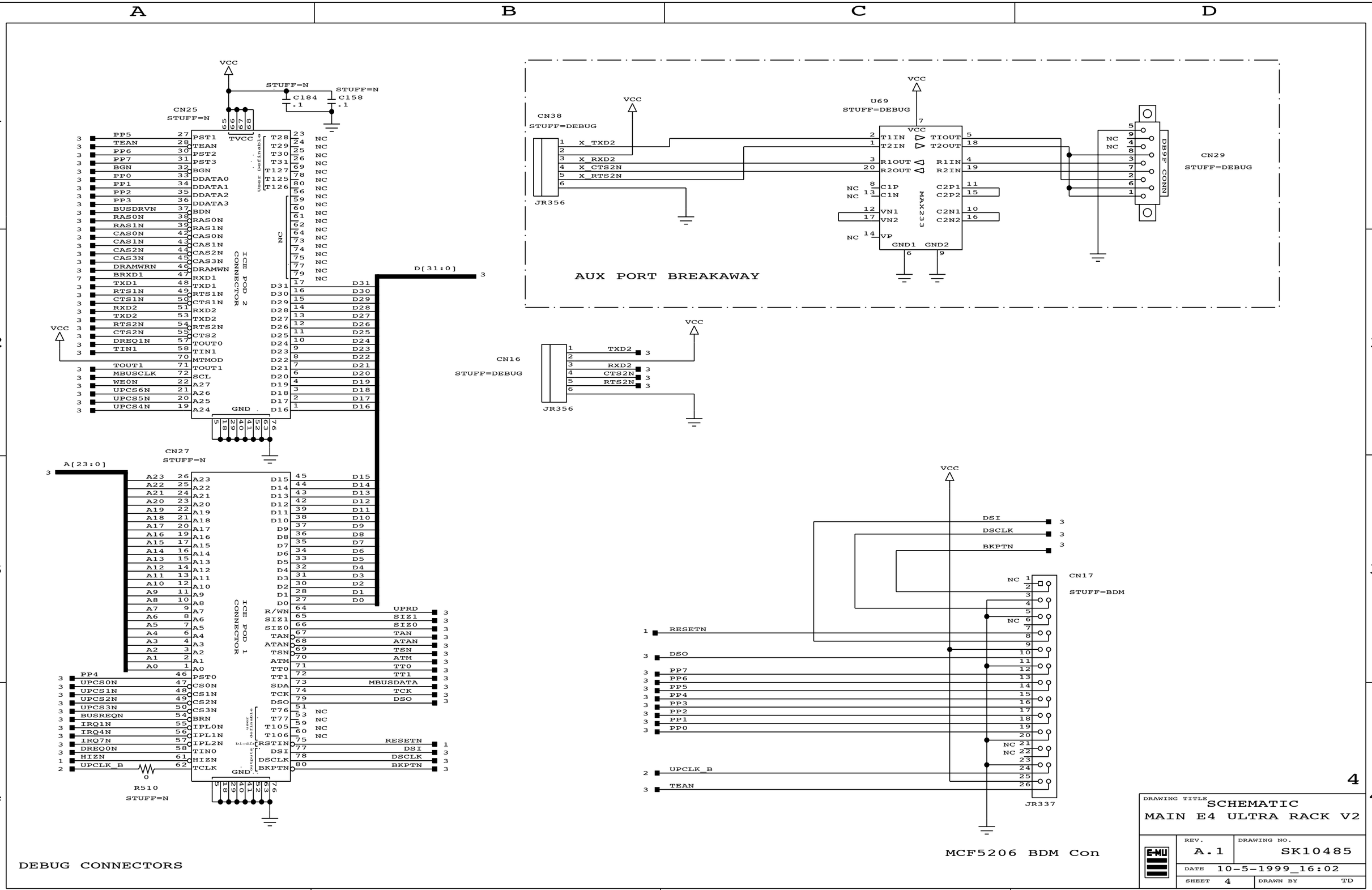
CN25
STUFF=N
ICE POD 2 CONNECTOR
CN27
STUFF=N
ICE POD 1 CONNECTOR
R510
STUFF=N
DEBUG CONNECTORS
CN38
STUFF=DEBUG
JR356
U69
STUFF=DEBUG
MAX233
CN29
STUFF=DEBUG
DB9F CONN
AUX PORT BREAKAWAY
CN16
STUFF=DEBUG
JR356
CN17
STUFF=BDM
JR337
MCF5206 BDM Con
DRAWING TITLE
SCHEMATIC
MAIN E4 ULTRA RACK V2
REV.
A.1
DRAWING NO.
SK10485
DATE
10-5-1999_16:02
SHEET
4
DRAWN BY
TD

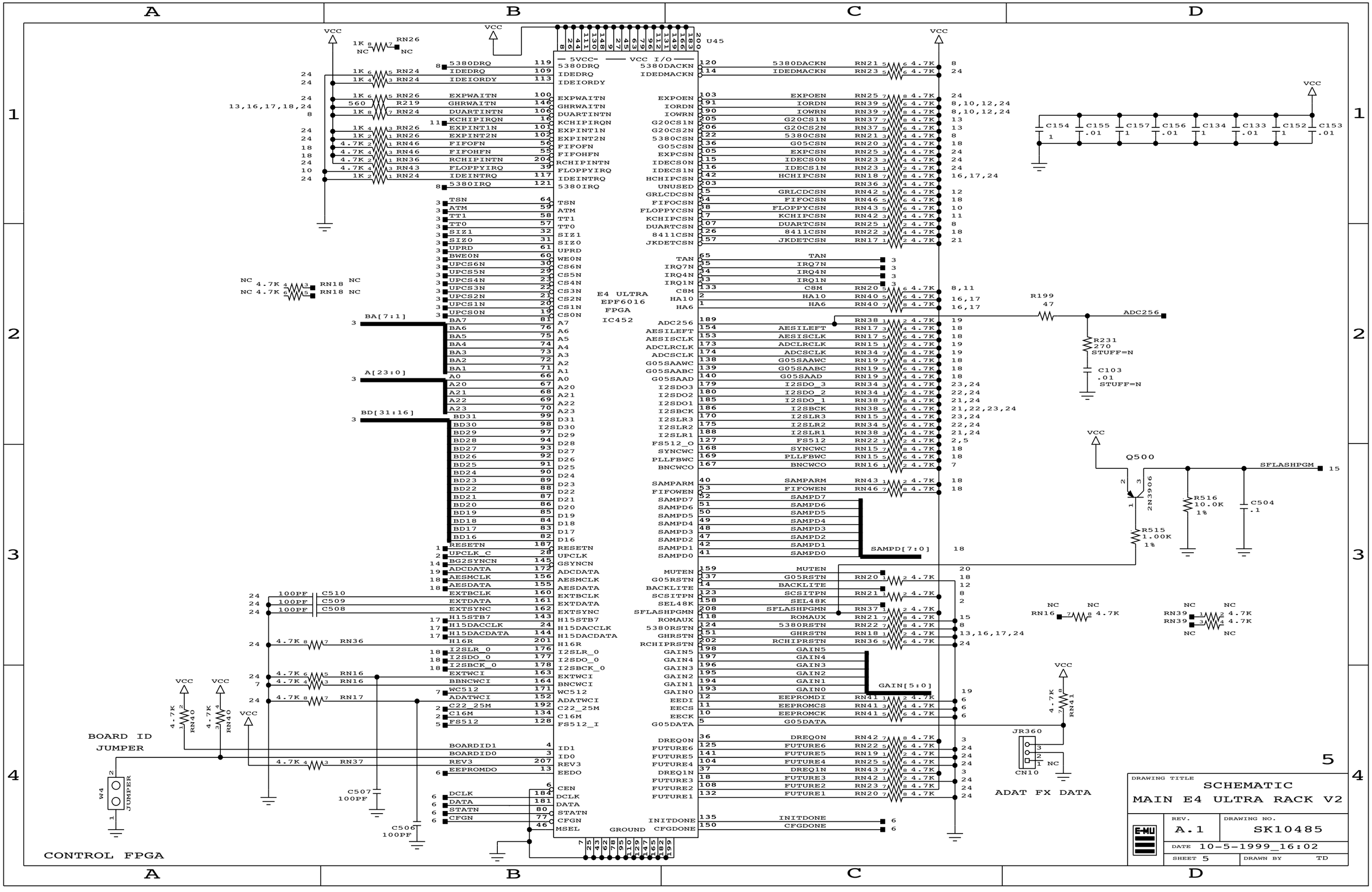
U45
E4 ULTRA
EPF6016
FPGA
IC452
5VCC
VCC I/O
GROUND
BOARD ID
JUMPER
W4
JUMPER
CONTROL FPGA
BA[7:1]
A[23:0]
BD[31:16]
SAMPD[7:0]
GAIN[5:0]
Q500
2N3906
R515
1.00K
1%
R516
10.0K
1%
C504
.1
SFLASHPGM
R199
47
ADC256
R231
270
STUFF=N
C103
.01
STUFF=N
JR360
CN10
ADAT FX DATA
C507
100PF
C506
100PF
DRAWING TITLE
SCHEMATIC
MAIN E4 ULTRA RACK V2
REV.
A.1
DRAWING NO.
SK10485
DATE 10-5-1999_16:02
SHEET 5
DRAWN BY TD

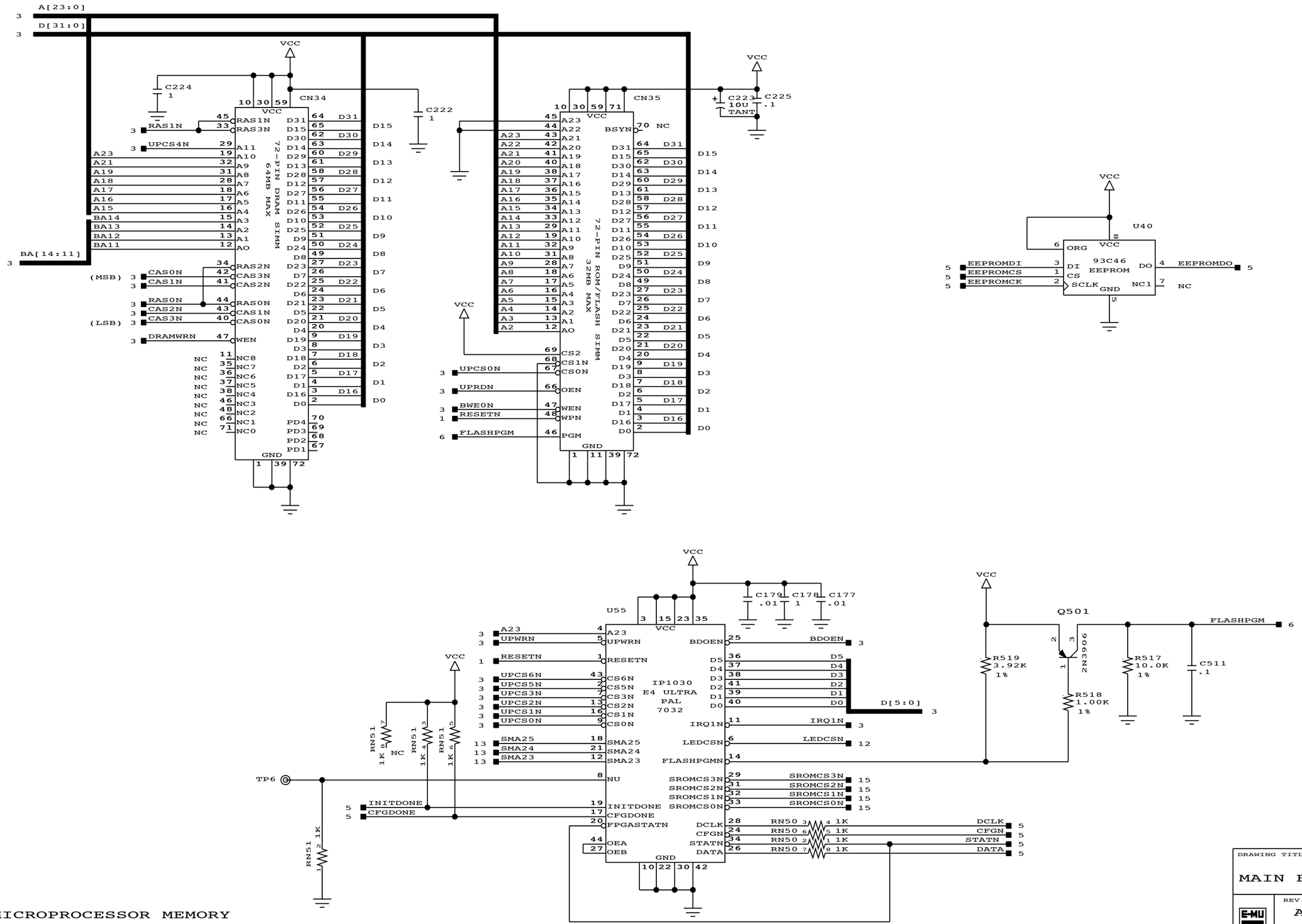

MICROPROCESSOR MEMORY
MISC PAL

DRAWING TITLE	SCHEMATIC MAIN E4 ULTRA RACK V2
REV.	A.1
DRAWING NO.	SK10485
DATE	10-5-1999_16:03
SHEET	6
DRAWN BY	TD

6

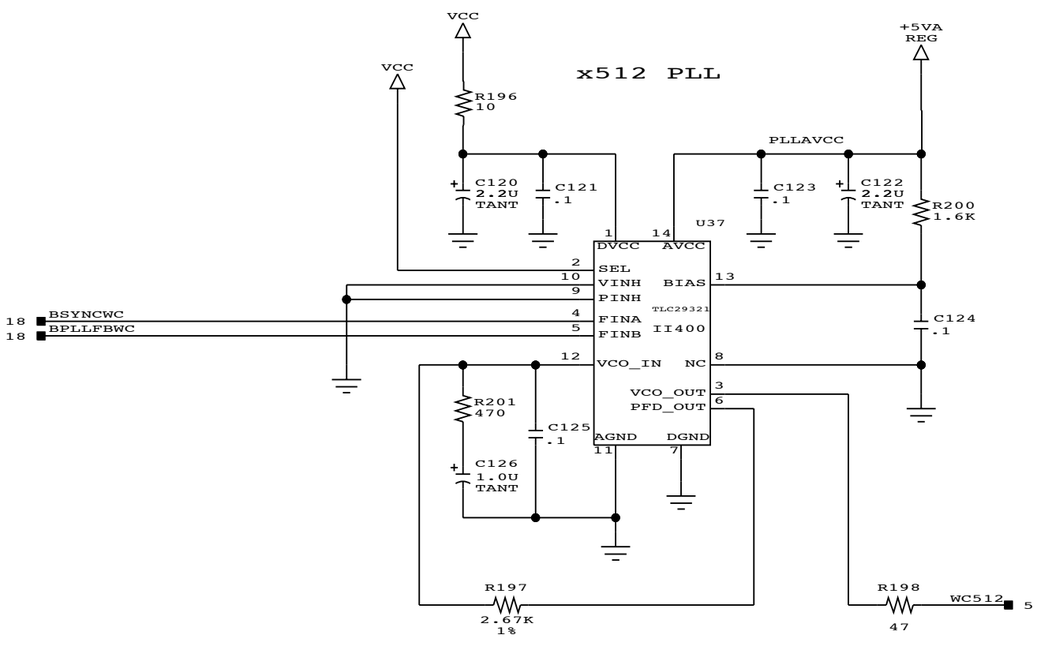

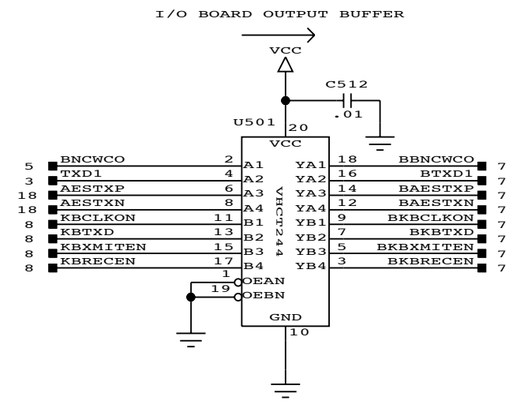

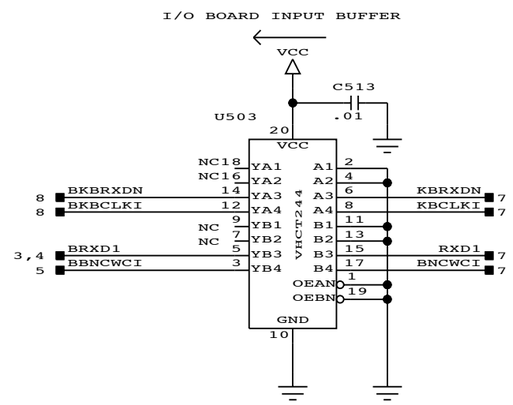

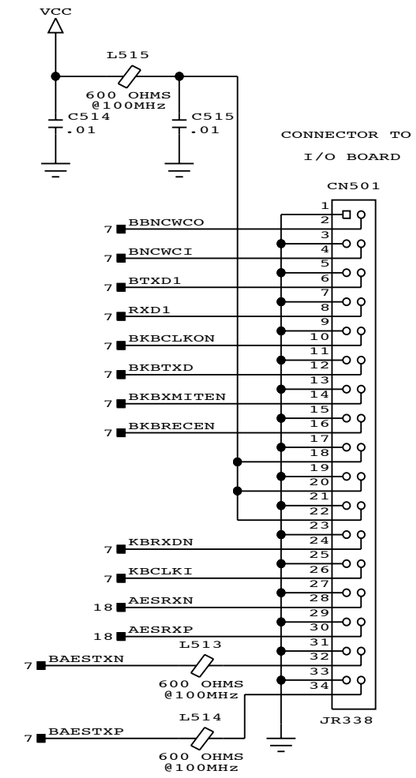

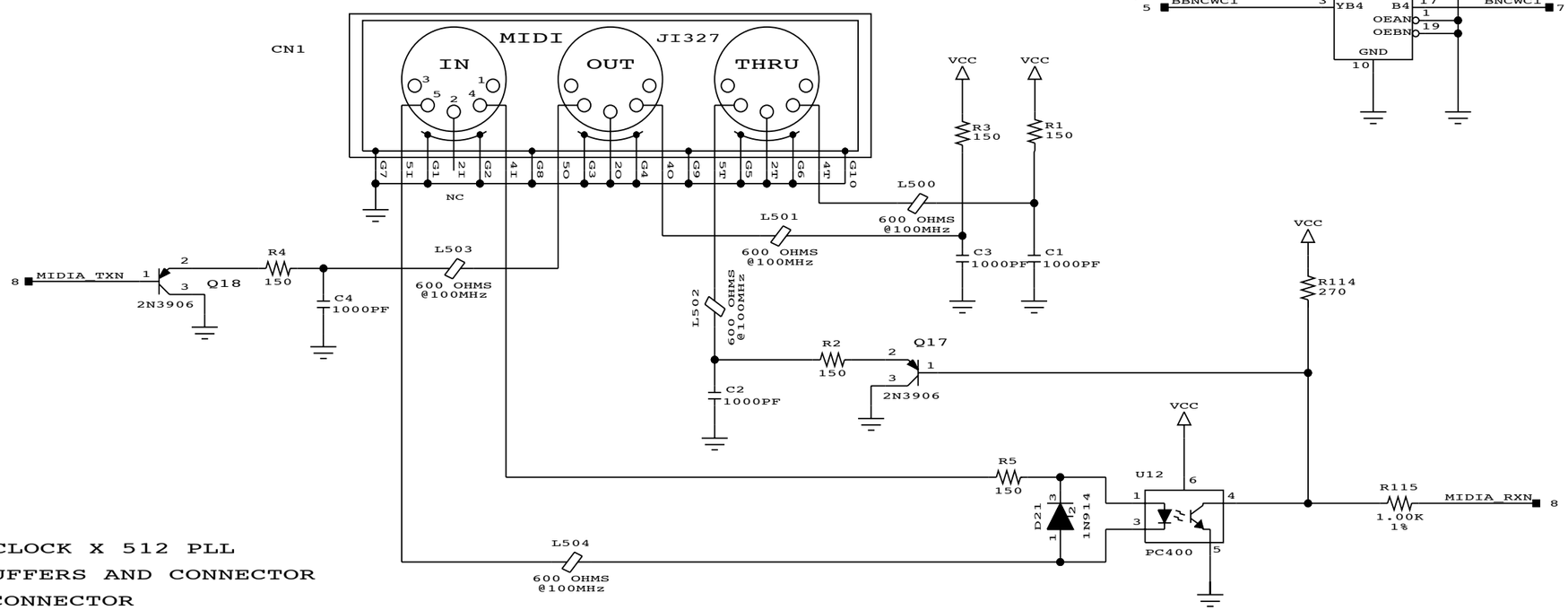

WORD CLOCK X 512 PLL
I/O BUFFERS AND CONNECTOR
MIDI CONNECTOR

7

DRAWING TITLE
SCHEMATIC
MAIN E4 ULTRA RACK V2

REV. A.1	DRAWING NO. SK10485
DATE 10-5-1999_16:03	
SHEET 7	DRAWN BY TD

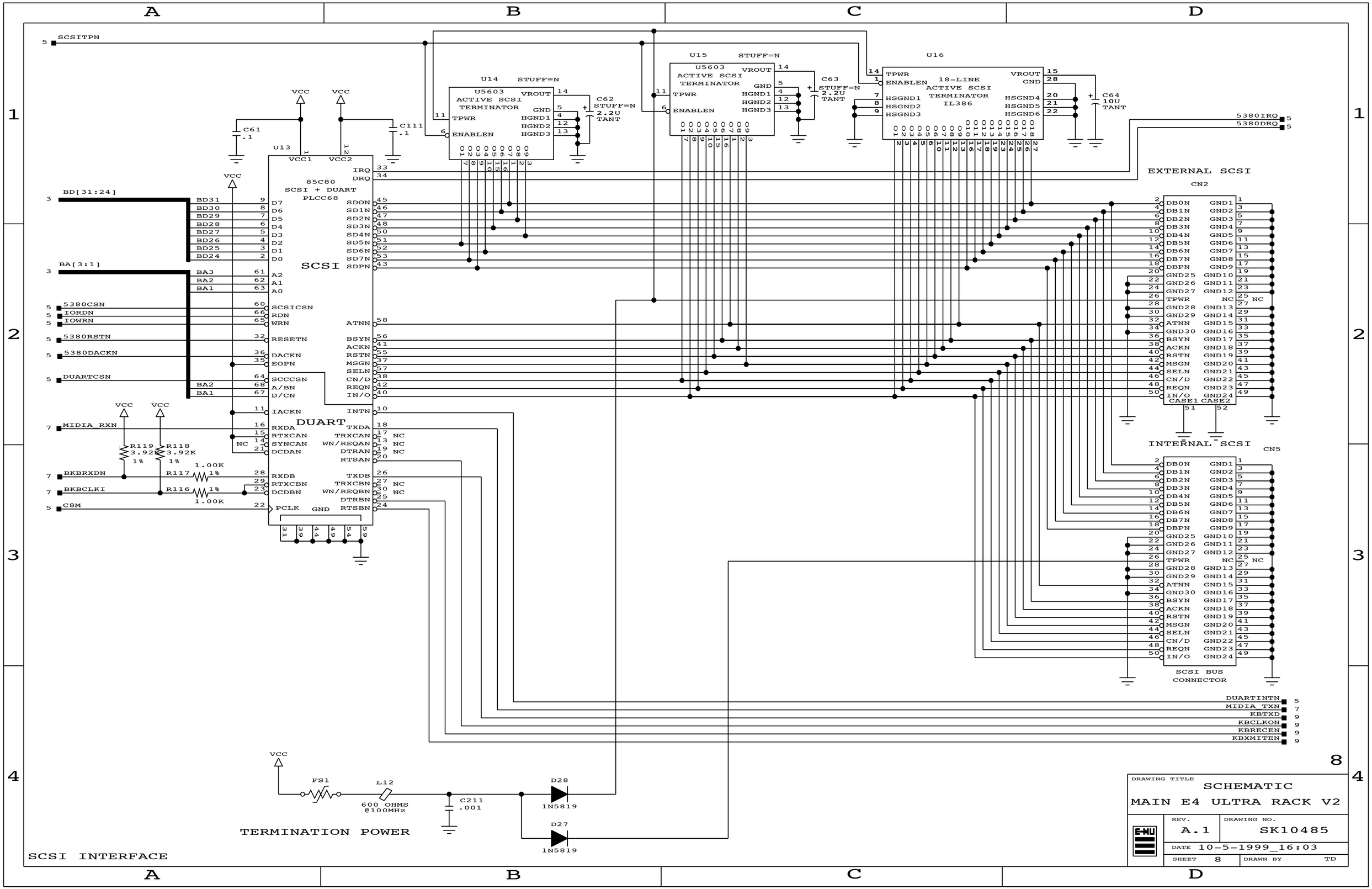
SCSITPN
U14 STUFF=N
U5603 ACTIVE SCSI TERMINATOR
C62 STUFF=N 2.2U TANT
U15 STUFF=N
U5603 ACTIVE SCSI TERMINATOR
C63 STUFF=N 2.2U TANT
U16
18-LINE ACTIVE SCSI TERMINATOR IL386
C64 10U TANT
5380IRQ
5380DRQ
C61 .1
C111 .1
U13
85C80 SCSI + DUART PLCC68
SCSI
DUART
BD[31:24]
BA[3:1]
5380CSN
IORDN
IOWRN
5380RSTN
5380DACKN
DUARTCSN
MIDIA_RXN
BKBRXDN
BKBCLKI
C8M
R119 3.92K 1%
R118 3.92K 1%
R117 1.00K 1%
R116 1.00K 1%
EXTERNAL SCSI
CN2
INTERNAL SCSI
CN5
SCSI BUS CONNECTOR
DUARTINTN
MIDIA_TXN
KBTXD
KBCLKON
KBRECEN
KBXMITEN
FS1
L12
600 OHMS @100MHz
C211 .001
D28 1N5819
D27 1N5819
TERMINATION POWER
SCSI INTERFACE
DRAWING TITLE
SCHEMATIC
MAIN E4 ULTRA RACK V2
REV. A.1
DRAWING NO. SK10485
DATE 10-5-1999_16:03
SHEET 8
DRAWN BY TD

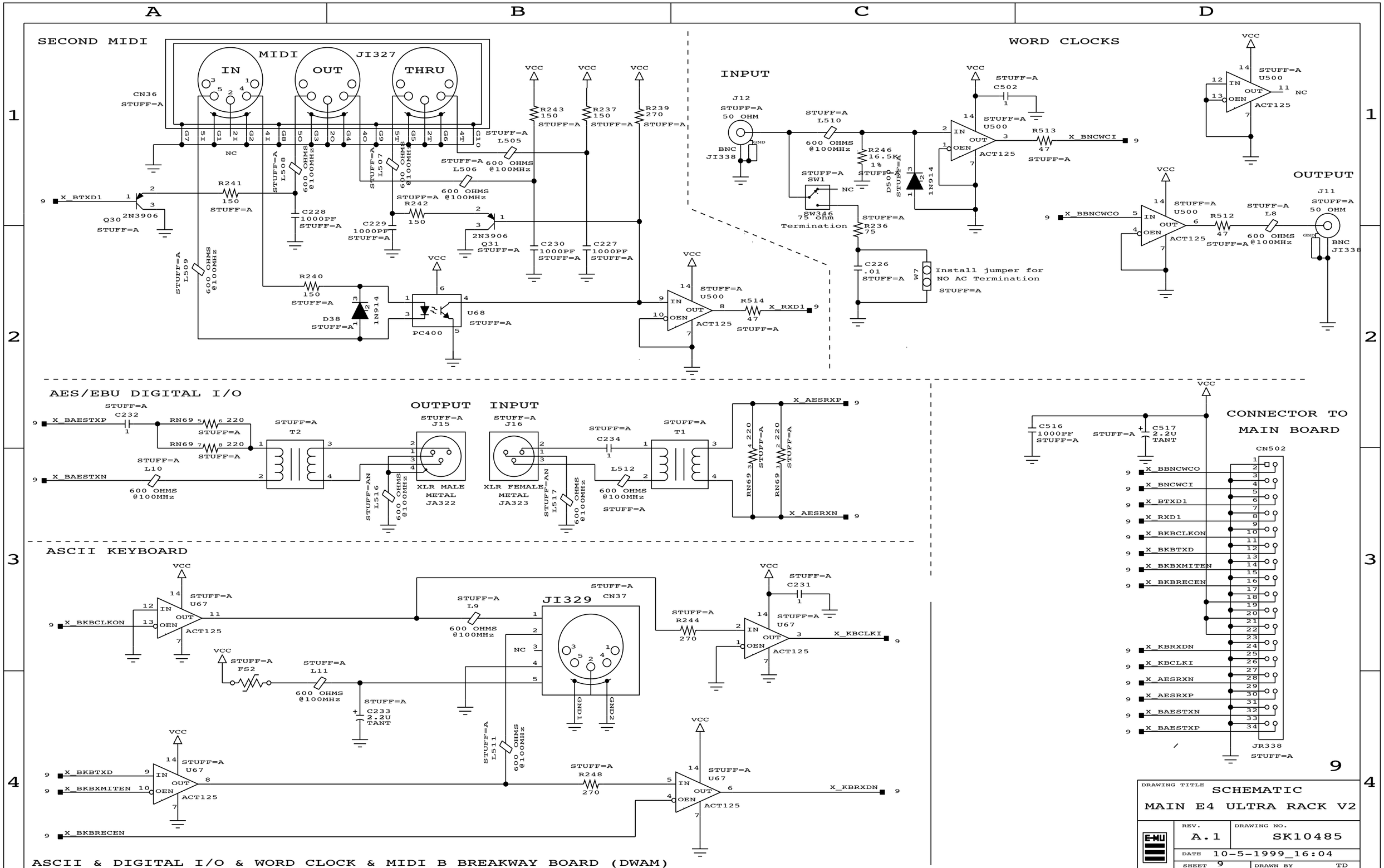
SECOND MIDI
MIDI JI327
IN
OUT
THRU
CN36
STUFF=A
NC
X_BTXD1
Q30
2N3906
STUFF=A
R241
150
STUFF=A
C228
1000PF
STUFF=A
R240
150
STUFF=A
D38
STUFF=A
1N914
PC400
U68
STUFF=A
L508
600 OHMS
@100MHz
L509
600 OHMS
@100MHz
L507
600 OHMS
@100MHz
L506
600 OHMS
@100MHz
L505
600 OHMS
@100MHz
R242
150
STUFF=A
C229
1000PF
STUFF=A
2N3906
Q31
STUFF=A
C230
1000PF
STUFF=A
C227
1000PF
STUFF=A
R243
150
STUFF=A
R237
150
STUFF=A
R239
270
STUFF=A
VCC
INPUT
J12
STUFF=A
50 OHM
BNC
JI338
GND
L510
600 OHMS
@100MHz
R246
16.5K
1%
STUFF=A
D50
STUFF=A
1N914
SW1
STUFF=A
NC
SW346
75 ohm
Termination
R236
75
STUFF=A
C226
.01
STUFF=A
W7
Install jumper for
NO AC Termination
STUFF=A
U500
STUFF=A
IN
OUT
OEN
ACT125
C502
STUFF=A
R513
47
STUFF=A
X_BNCWCI
WORD CLOCKS
U500
STUFF=A
NC
OUTPUT
J11
STUFF=A
50 OHM
BNC
JI338
X_BBNCWCO
R512
47
STUFF=A
L8
600 OHMS
@100MHz
STUFF=A
R514
47
STUFF=A
X_RXD1
AES/EBU DIGITAL I/O
STUFF=A
C232
X_BAESTXP
RN69
220
STUFF=A
RN69
220
STUFF=A
T2
STUFF=A
L10
600 OHMS
@100MHz
X_BAESTXN
OUTPUT
STUFF=A
J15
XLR MALE
METAL
JA322
STUFF=AN
L516
600 OHMS
@100MHz
INPUT
STUFF=A
J16
XLR FEMALE
METAL
JA323
STUFF=AN
L517
600 OHMS
@100MHz
STUFF=A
C234
L512
600 OHMS
@100MHz
STUFF=A
T1
RN69
220
STUFF=A
RN69
220
STUFF=A
X_AESRXP
X_AESRXN
CONNECTOR TO
MAIN BOARD
CN502
C516
1000PF
STUFF=A
C517
2.2U
TANT
STUFF=A
X_BBNCWCO
X_BNCWCI
X_BTXD1
X_RXD1
X_BKBCLKON
X_BKBTXD
X_BKBXMITEN
X_BKBRECEN
X_KBRXDN
X_KBCLKI
X_AESRXN
X_AESRXP
X_BAESTXN
X_BAESTXP
JR338
STUFF=A
ASCII KEYBOARD
U67
STUFF=A
IN
OUT
OEN
ACT125
X_BKBCLKON
L9
600 OHMS
@100MHz
JI329
STUFF=A
CN37
NC
GND1
GND2
FS2
STUFF=A
L11
600 OHMS
@100MHz
C233
2.2U
TANT
STUFF=A
R244
270
C231
STUFF=A
X_KBCLKI
X_BKBTXD
X_BKBXMITEN
X_BKBRECEN
L511
600 OHMS
@100MHz
R248
270
X_KBRXDN
ASCII & DIGITAL I/O & WORD CLOCK & MIDI B BREAKWAY BOARD (DWAM)
DRAWING TITLE
SCHEMATIC
MAIN E4 ULTRA RACK V2
E-MU
REV.
A.1
DRAWING NO.
SK10485
DATE
10-5-1999_16:04
SHEET
9
DRAWN BY
TD

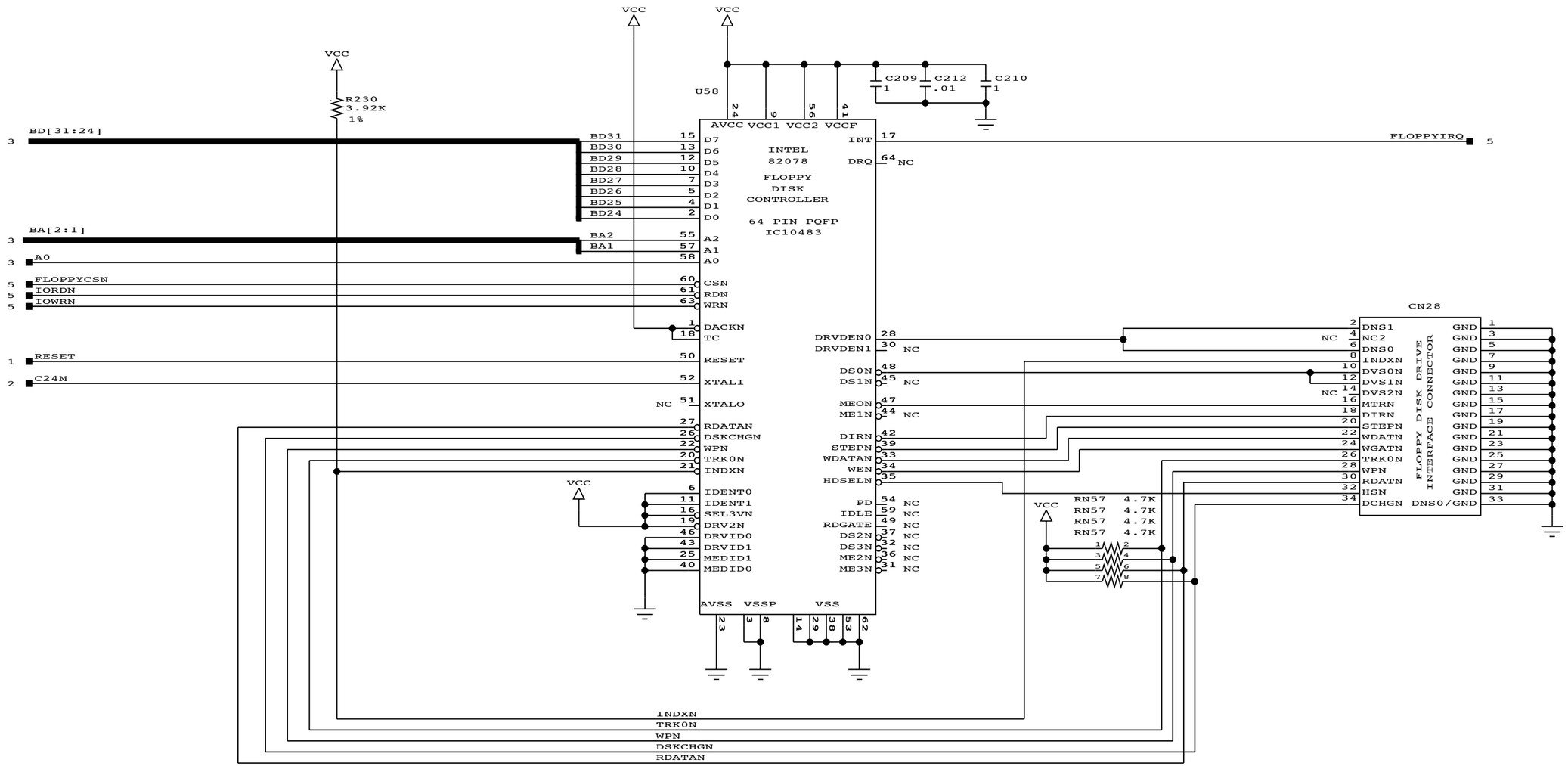

Note: On previous versions of this board (AP627),
U58 was a 44-pin version of the Intl 82078

FLOPPY DISK DRIVE INTERFACE

10

DRAWING TITLE	SCHEMATIC MAIN E4 ULTRA RACK V2
REV.	A.1
DRAWING NO.	SK10485
DATE	10-5-1999_16:04
SHEET	10
DRAWN BY	TD

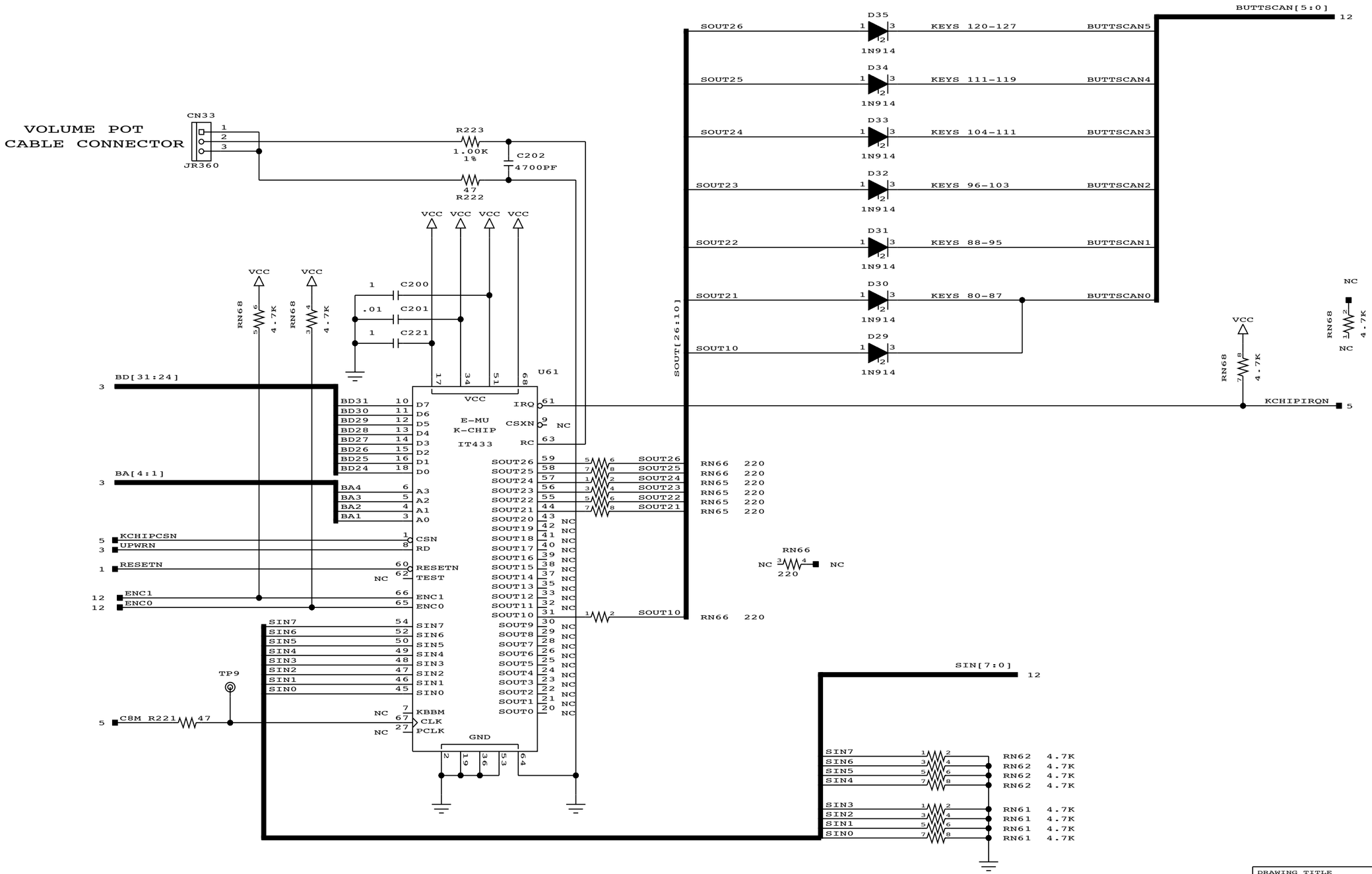

FRONT PANEL BUTTON SCANNER

11

DRAWING TITLE
SCHEMATIC
MAIN E4 ULTRA RACK V2

REV. A.1	DRAWING NO. SK10485
DATE 10-5-1999_16:04	
SHEET 11	DRAWN BY TD

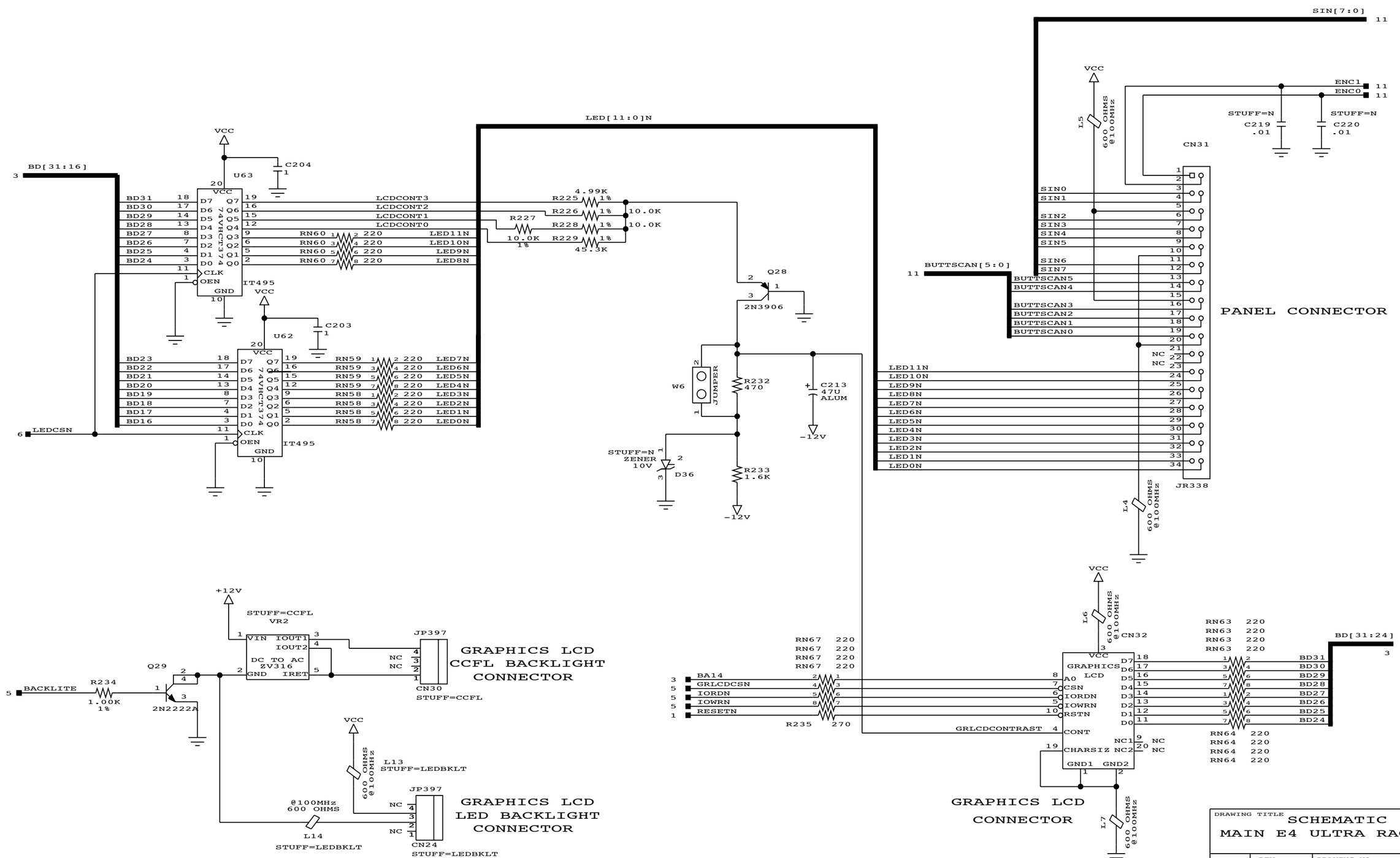
BD[31:16]
LEDCSN
U63
U62
74VHCT374
IT495
C204
C203
LCDCONT3
LCDCONT2
LCDCONT1
LCDCONT0
LED11N
LED10N
LED9N
LED8N
LED7N
LED6N
LED5N
LED4N
LED3N
LED2N
LED1N
LED0N
LED[11:0]N
R225 4.99K
R226 10.0K
R227 10.0K
R228 10.0K
R229 45.3K
Q28
2N3906
W6 JUMPER
R232 470
C213 47U ALUM
-12V
STUFF=N ZENER 10V
D36
R233 1.6K
SIN[7:0]
ENC1
ENC0
STUFF=N
C219 .01
C220 .01
L5 600 OHMS @100MHz
CN31
SIN0
SIN1
SIN2
SIN3
SIN4
SIN5
SIN6
SIN7
BUTTSCAN[5:0]
BUTTSCAN5
BUTTSCAN4
BUTTSCAN3
BUTTSCAN2
BUTTSCAN1
BUTTSCAN0
NC
JR338
PANEL CONNECTOR
L4 600 OHMS @100MHz
+12V
STUFF=CCFL
VR2
VIN IOUT1 IOUT2 GND IRET
DC TO AC ZV316
JP397
CN30
GRAPHICS LCD CCFL BACKLIGHT CONNECTOR
Q29
R234 1.00K 1%
2N2222A
BACKLITE
L13 STUFF=LEDBKLT
L14 @100MHz 600 OHMS
STUFF=LEDBKLT
CN24
GRAPHICS LCD LED BACKLIGHT CONNECTOR
L6 600 OHMS @100MHz
CN32
RN67 220
BA14
GRLCDCSN
IORDN
IOWRN
RESETN
R235 270
GRAPHICS LCD
A0
CSN
IORDN
IOWRN
RSTN
CONT
CHARSIZ
GRLCDCONTRAST
GND1 GND2
RN63 220
RN64 220
BD[31:24]
BD31
BD30
BD29
BD28
BD27
BD26
BD25
BD24
GRAPHICS LCD CONNECTOR
L7 600 OHMS @100MHz
12
DRAWING TITLE
SCHEMATIC
MAIN E4 ULTRA RACK V2
E-MU
REV. A.1
DRAWING NO. SK10485
DATE 10-5-1999_16:04
SHEET 12
DRAWN BY TD
FRONT PANEL INTERFACE

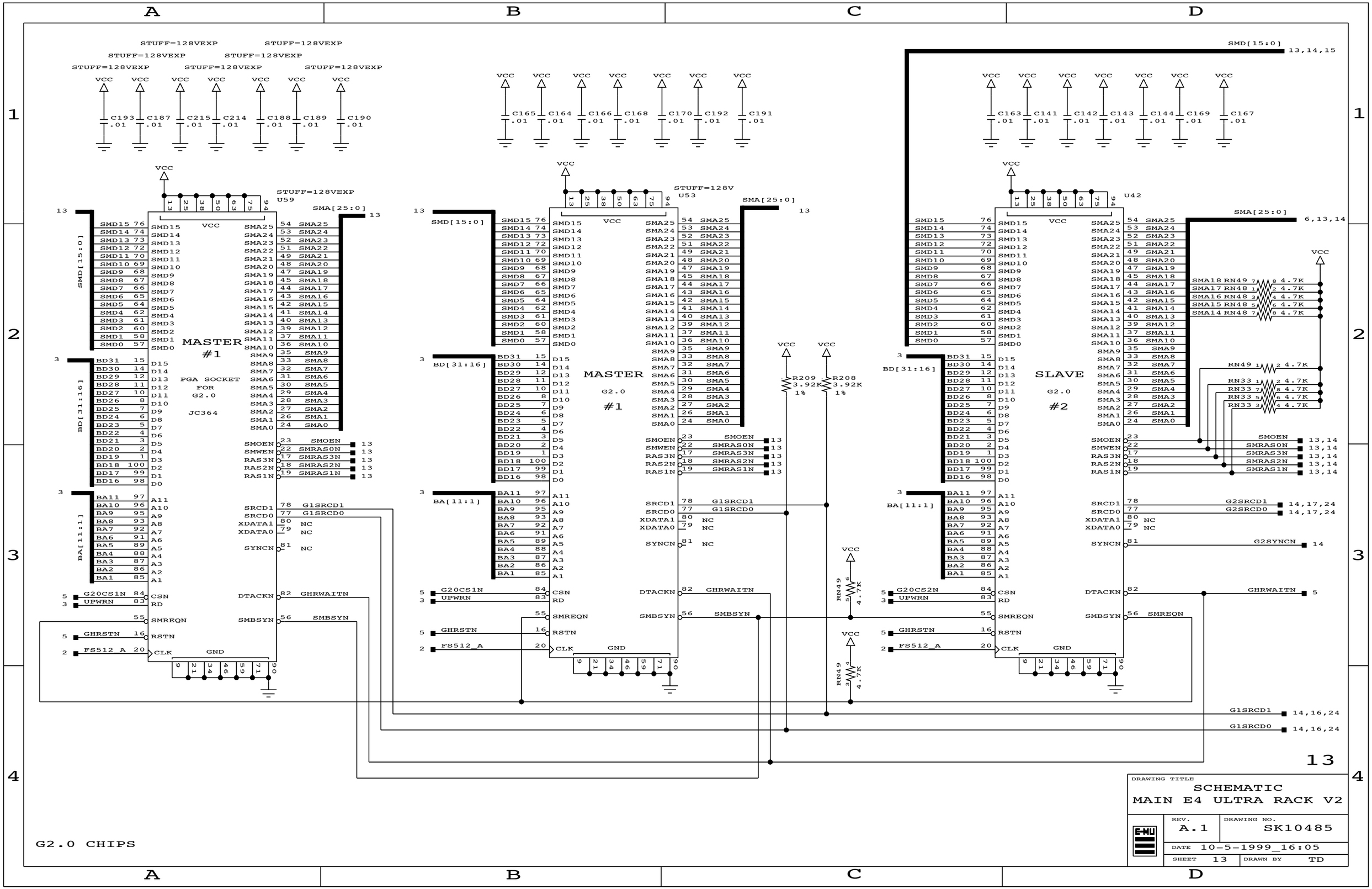
STUFF=128VEXP
VCC
C193 .01
C187 .01
C215 .01
C214 .01
C188 .01
C189 .01
C190 .01
C165 .01
C164 .01
C166 .01
C168 .01
C170 .01
C192 .01
C191 .01
C163 .01
C141 .01
C142 .01
C143 .01
C144 .01
C169 .01
C167 .01
U59
U53
U42
MASTER #1
PGA SOCKET FOR G2.0
JC364
MASTER G2.0 #1
SLAVE G2.0 #2
STUFF=128V
SMD[15:0]
SMA[25:0]
BD[31:16]
BA[11:1]
SMOEN
SMWEN
SMRAS0N
RAS3N
SMRAS3N
RAS2N
SMRAS2N
RAS1N
SMRAS1N
SRCD1
SRCD0
G1SRCD1
G1SRCD0
G2SRCD1
G2SRCD0
XDATA1
XDATA0
NC
SYNCN
G2SYNCN
DTACKN
GHRWAITN
SMBSYN
SMREQN
G20CS1N
G20CS2N
UPWRN
GHRSTN
FS512_A
GND
R209 3.92K 1%
R208 3.92K 1%
RN49 4.7K
RN48 4.7K
RN33 4.7K
G2.0 CHIPS
DRAWING TITLE
SCHEMATIC
MAIN E4 ULTRA RACK V2
REV. A.1
DRAWING NO. SK10485
DATE 10-5-1999_16:05
SHEET 13
DRAWN BY TD
E-MU

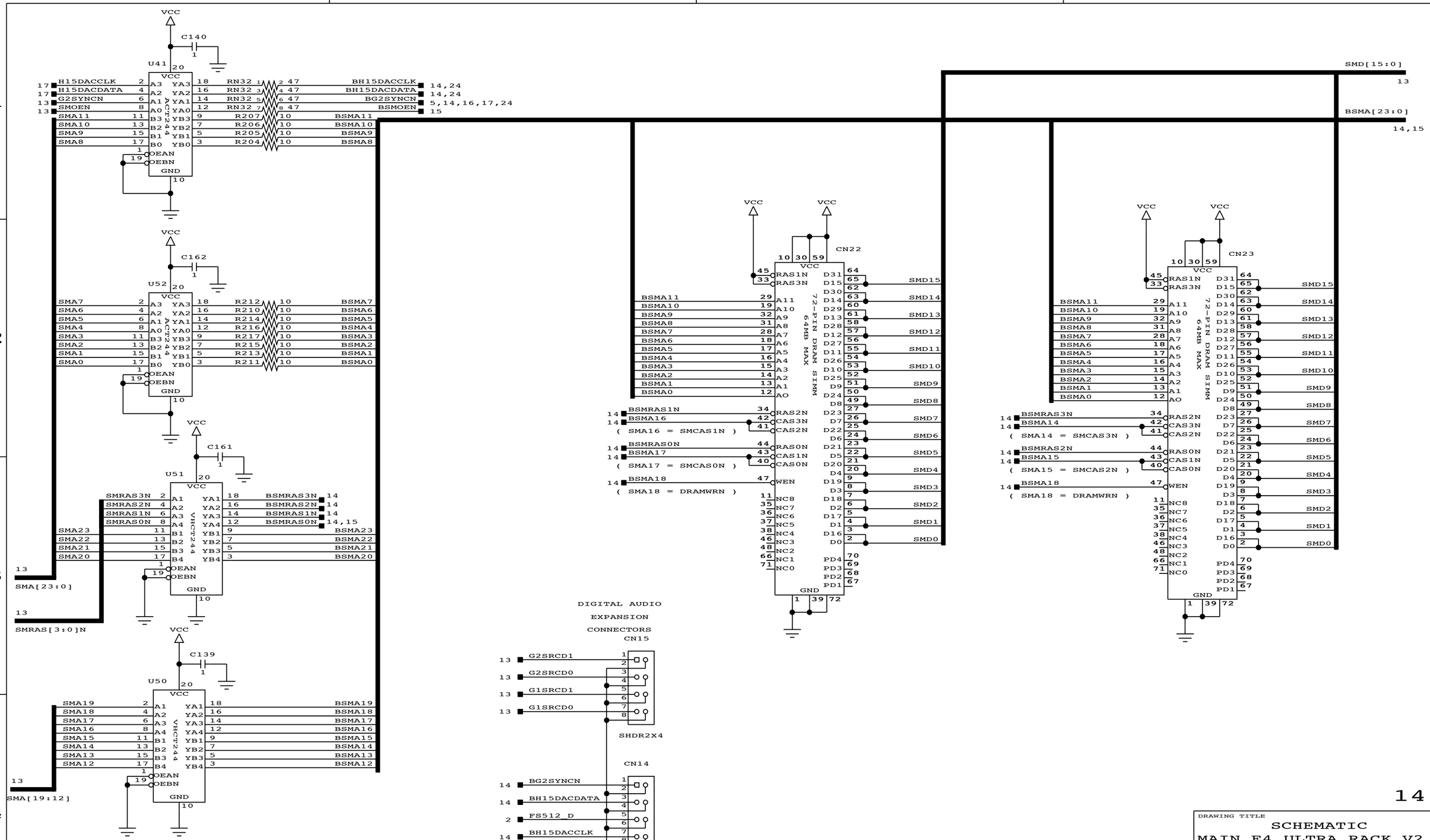

DRAWING TITLE

SCHEMATIC
MAIN E4 ULTRA RACK V2

REV.	DRAWING NO.
A.1	SK10485
DATE 10-5-1999_16:05	
SHEET 14	DRAWN BY TD

14

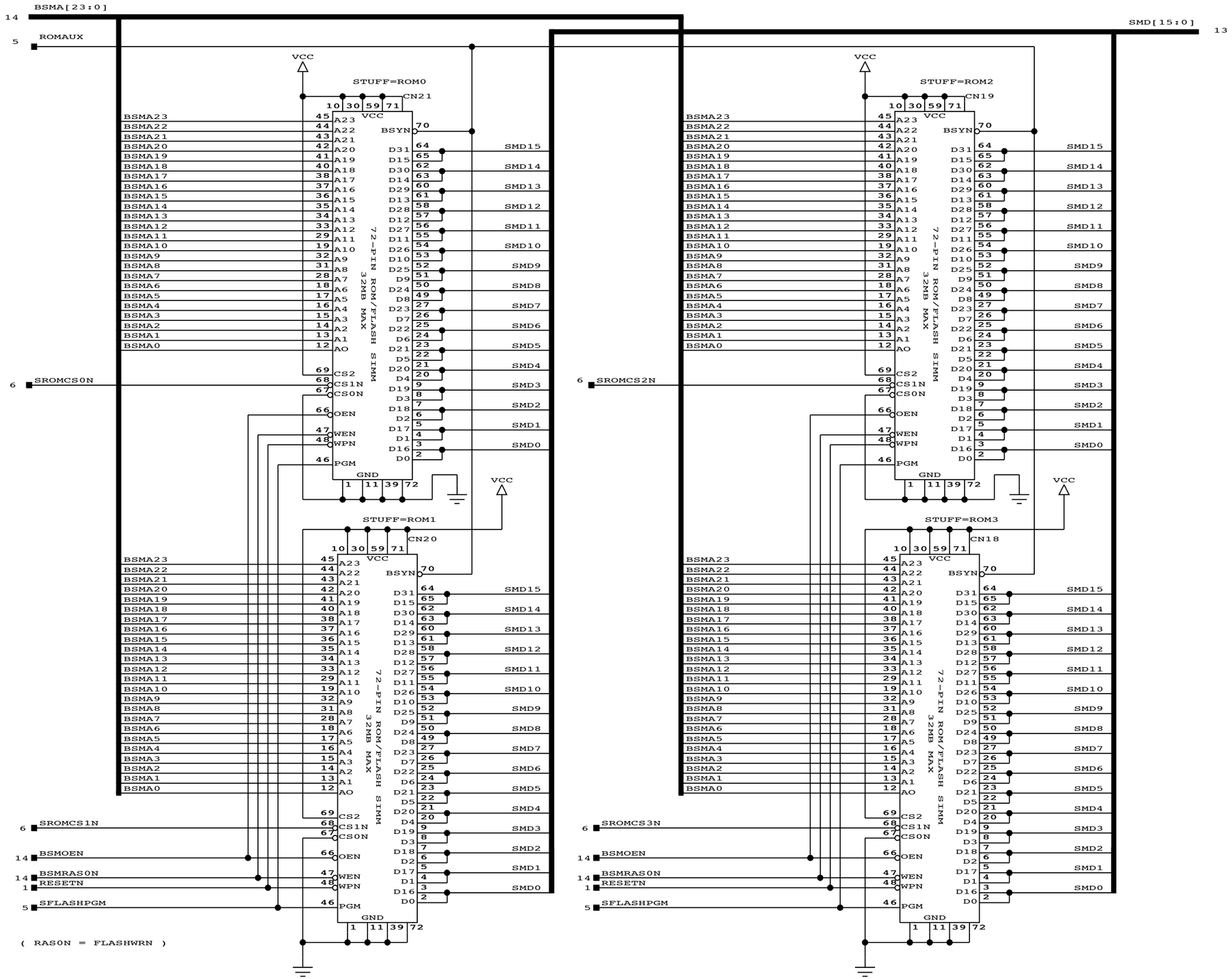

SOUND MEMORY ROM SIMMS

15

DRAWING TITLE
SCHEMATIC
MAIN E4 ULTRA RACK V2

E-MU	REV. A.1	DRAWING NO. SK10485
	DATE 10-5-1999_16:05	
	SHEET 15	DRAWN BY TD

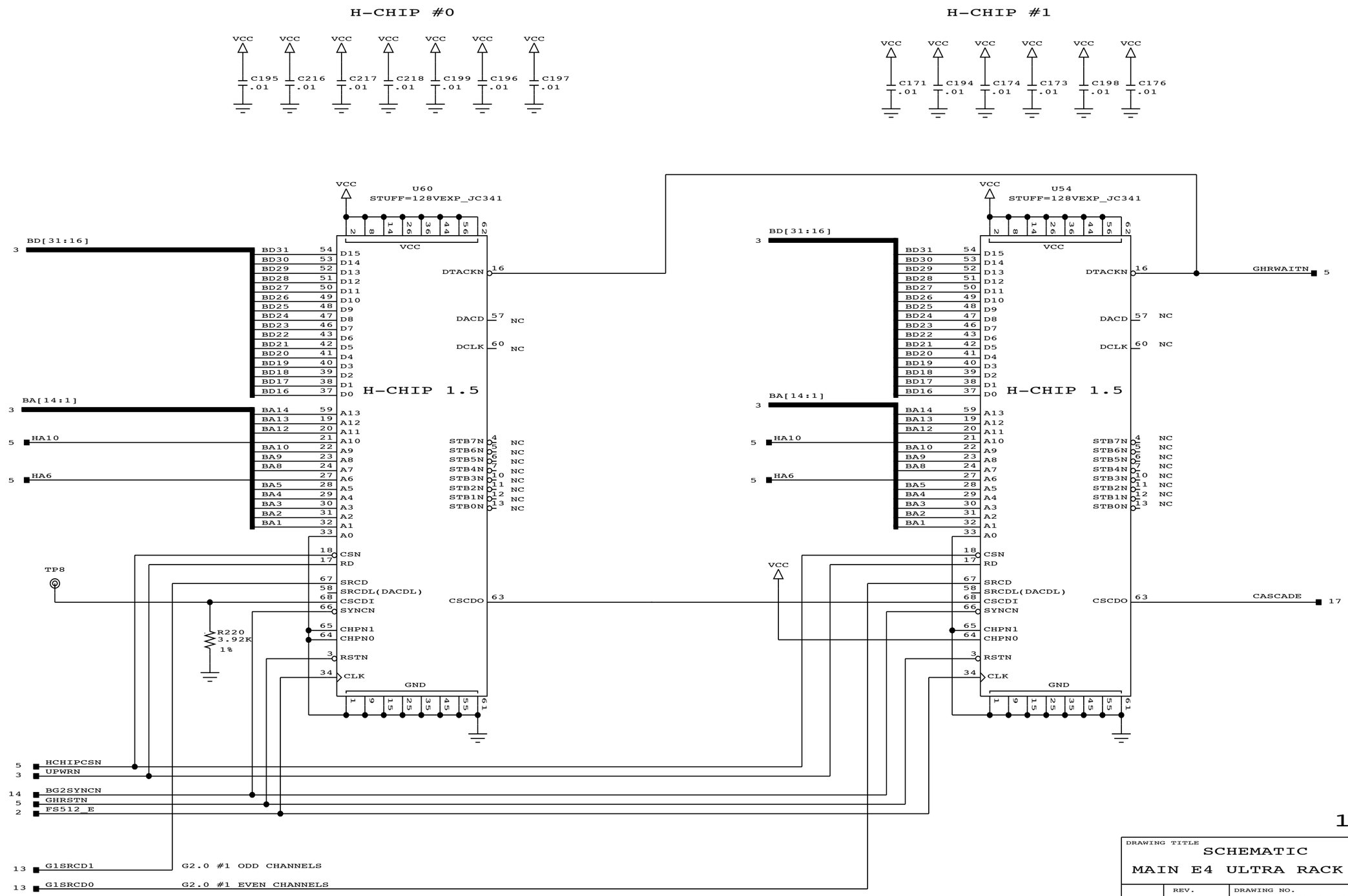

H-CHIPS #0 AND #1

16

DRAWING TITLE
SCHEMATIC
MAIN E4 ULTRA RACK V2

REV. A.1	DRAWING NO. SK10485
DATE 10-5-1999_16:05	
SHEET 16	DRAWN BY TD

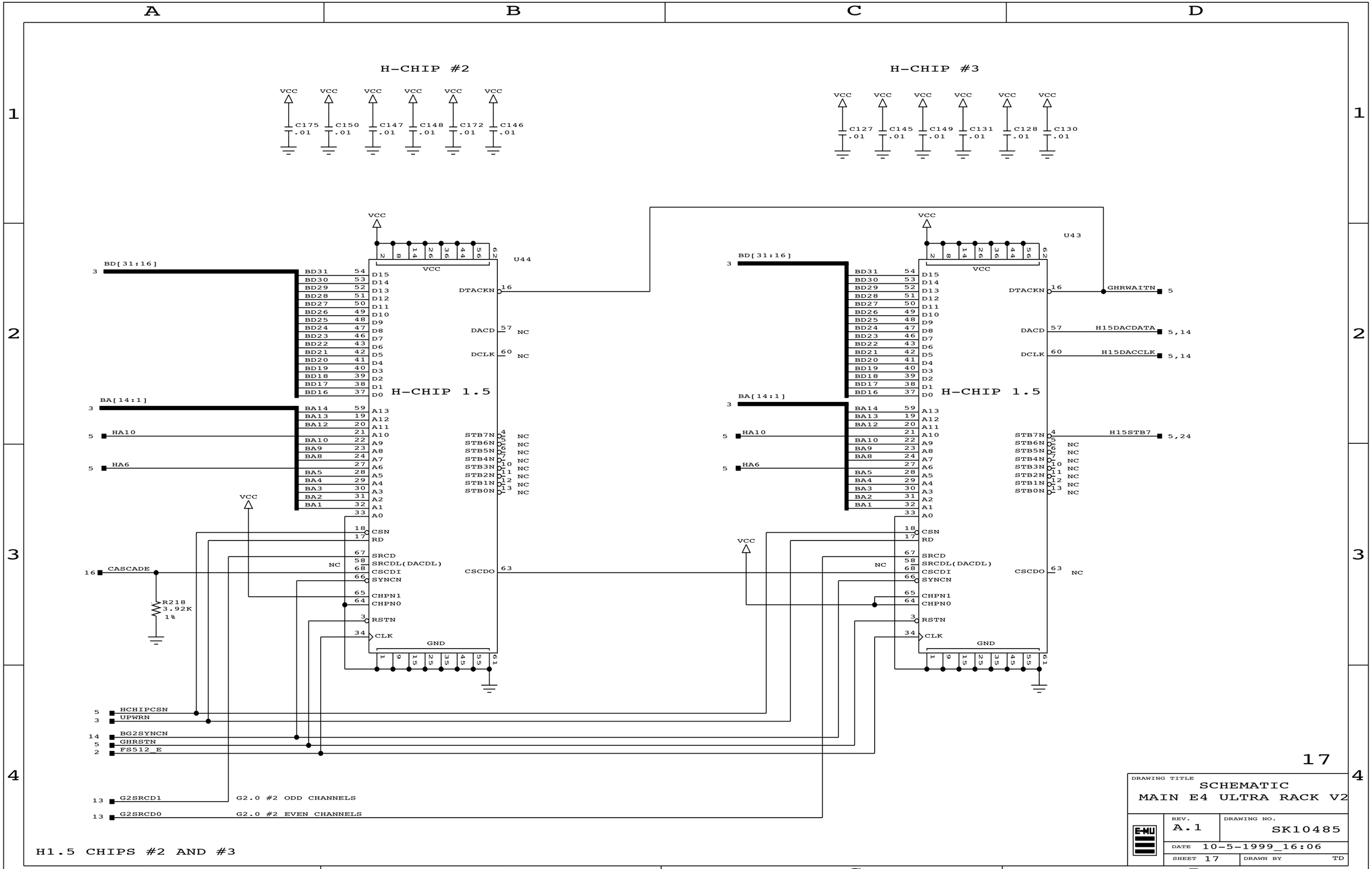
H-CHIP #2
H-CHIP #3
C175 .01
C150 .01
C147 .01
C148 .01
C172 .01
C146 .01
C127 .01
C145 .01
C149 .01
C131 .01
C128 .01
C130 .01
U44
U43
H-CHIP 1.5
BD[31:16]
BA[14:1]
HA10
HA6
CASCADE
R218 3.92K 1%
DTACKN
DACD
DCLK
STB7N
STB6N
STB5N
STB4N
STB3N
STB2N
STB1N
STB0N
CSN
RD
SRCD
SRCDL(DACDL)
CSCDI
SYNCN
CHPN1
CHPN0
RSTN
CLK
CSCDO
GHRWAITN
H15DACDATA
H15DACCLK
H15STB7
HCHIPCSN
UPWRN
BG2SYNCN
GHRSTN
FS512_E
G2SRCD1
G2SRCD0
G2.0 #2 ODD CHANNELS
G2.0 #2 EVEN CHANNELS
H1.5 CHIPS #2 AND #3
17
DRAWING TITLE
SCHEMATIC
MAIN E4 ULTRA RACK V2
REV. A.1
DRAWING NO. SK10485
DATE 10-5-1999_16:06
SHEET 17
DRAWN BY TD

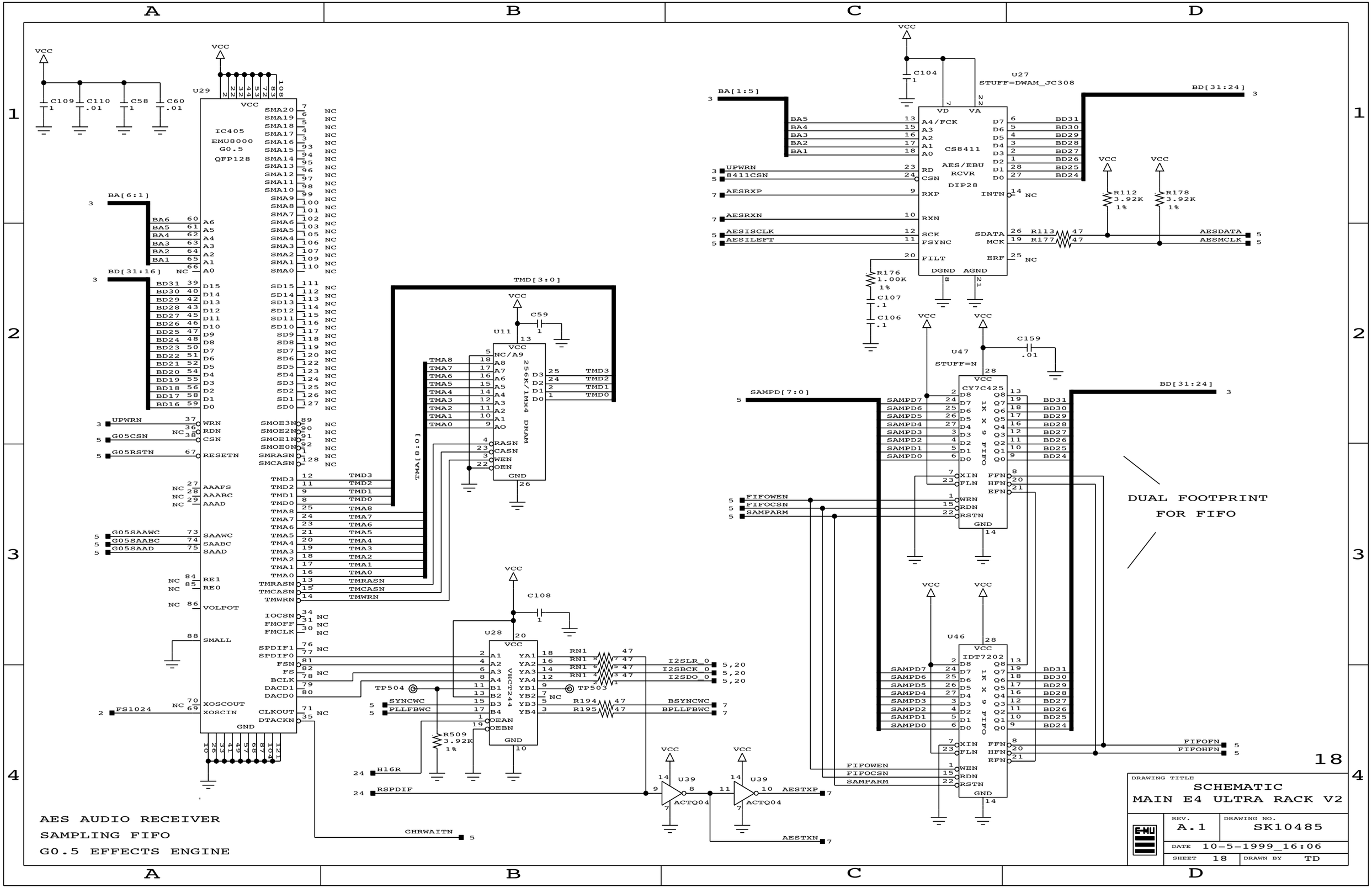
IC405
EMU8000
G0.5
QFP128
U29
U27
STUFF=DWAM_JC308
CS8411
AES/EBU
RCVR
DIP28
U47
STUFF=N
CY7C425
1K X 9 FIFO
U46
IDT7202
1K X 9 FIFO
U11
256K/1Mx4 DRAM
U28
VHCT244
U39
ACTQ04
DUAL FOOTPRINT
FOR FIFO
AES AUDIO RECEIVER
SAMPLING FIFO
G0.5 EFFECTS ENGINE
SCHEMATIC
MAIN E4 ULTRA RACK V2
REV. A.1
DRAWING NO. SK10485
DATE 10-5-1999_16:06
SHEET 18
DRAWN BY TD
18

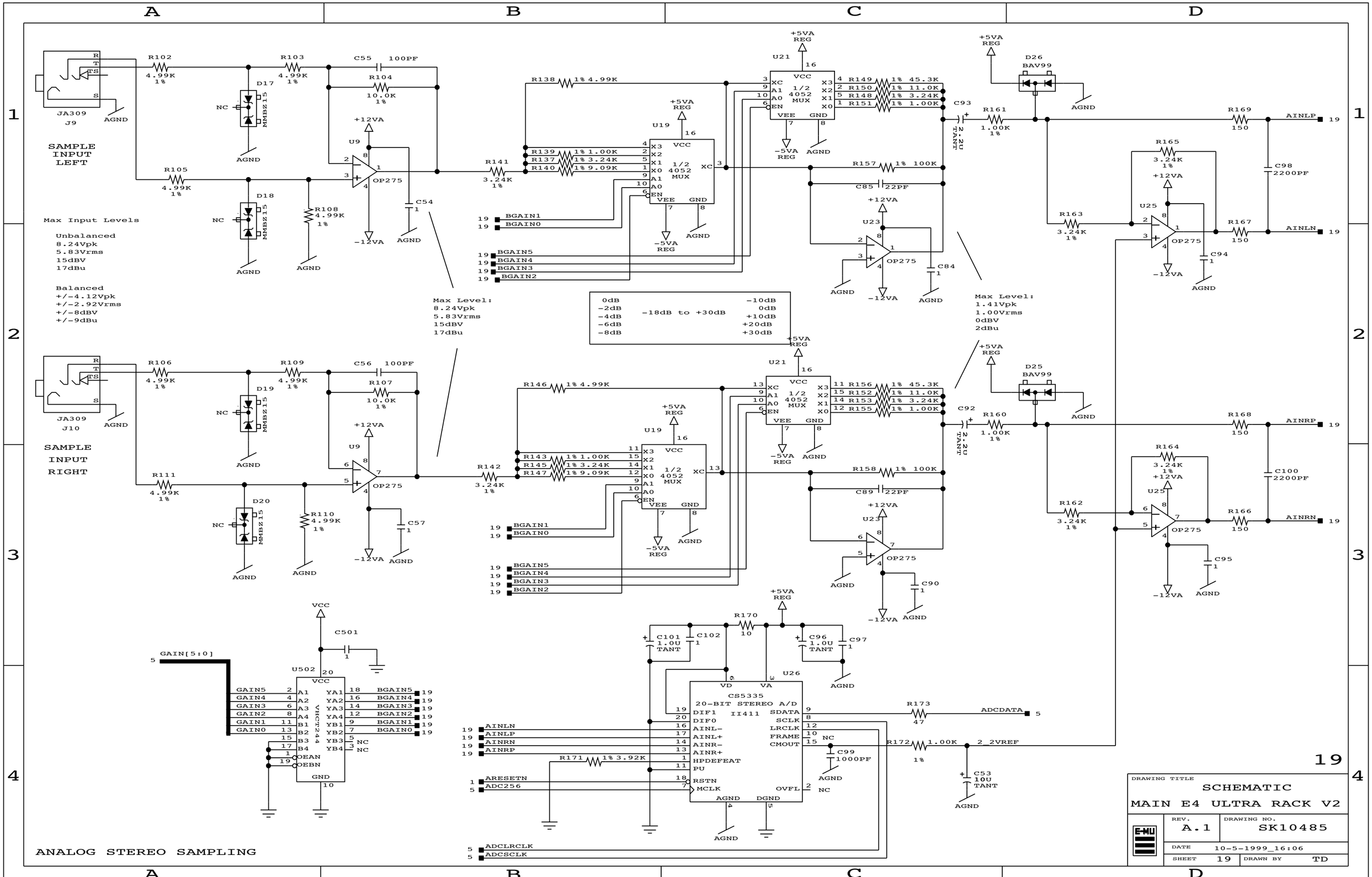
SAMPLE INPUT LEFT
JA309
J9
R102 4.99K 1%
R103 4.99K 1%
C55 100PF
R104 10.0K 1%
D17 MMBZ15
D18 MMBZ15
R105 4.99K 1%
R108 4.99K 1%
U9 OP275
+12VA
-12VA
C54 1
AGND
NC
Max Input Levels
Unbalanced
8.24Vpk
5.83Vrms
15dBV
17dBu
Balanced
+/-4.12Vpk
+/-2.92Vrms
+/-8dBV
+/-9dBu
Max Level:
8.24Vpk
5.83Vrms
15dBV
17dBu
SAMPLE INPUT RIGHT
JA309
J10
R106 4.99K 1%
R109 4.99K 1%
C56 100PF
R107 10.0K 1%
D19 MMBZ15
D20 MMBZ15
R111 4.99K 1%
R110 4.99K 1%
U9 OP275
C57 1
R138 1% 4.99K
R139 1% 1.00K
R137 1% 3.24K
R140 1% 9.09K
R141 3.24K 1%
U19 1/2 4052 MUX
+5VA REG
-5VA REG
BGAIN1
BGAIN0
BGAIN5
BGAIN4
BGAIN3
BGAIN2
0dB
-2dB
-4dB
-6dB
-8dB
-18dB to +30dB
-10dB
0dB
+10dB
+20dB
+30dB
U21 1/2 4052 MUX
R149 1% 45.3K
R150 1% 11.0K
R148 1% 3.24K
R151 1% 1.00K
R157 1% 100K
C85 22PF
U23 OP275
C84 1
C93 2.2U TANT
R161 1.00K 1%
D26 BAV99
R169 150
AINLP
R165 3.24K 1%
C98 2200PF
R163 3.24K 1%
U25 OP275
R167 150
AINLN
C94 1
R146 1% 4.99K
R143 1% 1.00K
R145 1% 3.24K
R147 1% 9.09K
R142 3.24K 1%
R156 1% 45.3K
R152 1% 11.0K
R153 1% 3.24K
R155 1% 1.00K
R158 1% 100K
C89 22PF
U23 OP275
C90 1
C92 2.2U TANT
R160 1.00K 1%
D25 BAV99
R168 150
AINRP
R164 3.24K 1%
C100 2200PF
R162 3.24K 1%
U25 OP275
R166 150
AINRN
C95 1
Max Level:
1.41Vpk
1.00Vrms
0dBV
2dBu
VCC
C501 1
GAIN[5:0]
U502 VHCT244
GAIN5
GAIN4
GAIN3
GAIN2
GAIN1
GAIN0
OEAN
OEBN
YA1
YA2
YA3
YA4
YB1
YB2
YB3
YB4
NC
GND
C101 1.0U TANT
C102 1
R170 10
C96 1.0U TANT
C97 1
U26 CS5335
20-BIT STEREO A/D
II411
DIF1
DIF0
AINL-
AINL+
AINR-
AINR+
HPDEFEAT
PU
RSTN
MCLK
SDATA
SCLK
LRCLK
FRAME
CMOUT
OVFL
AGND
DGND
R173 47
ADCDATA
R172 1.00K 1%
2_2VREF
C53 10U TANT
C99 1000PF
R171 1% 3.92K
AINLN
AINLP
AINRN
AINRP
ARESETN
ADC256
ADCLRCLK
ADCSCLK
ANALOG STEREO SAMPLING
DRAWING TITLE
SCHEMATIC
MAIN E4 ULTRA RACK V2
REV. A.1
DRAWING NO. SK10485
DATE 10-5-1999_16:06
SHEET 19
DRAWN BY TD
19

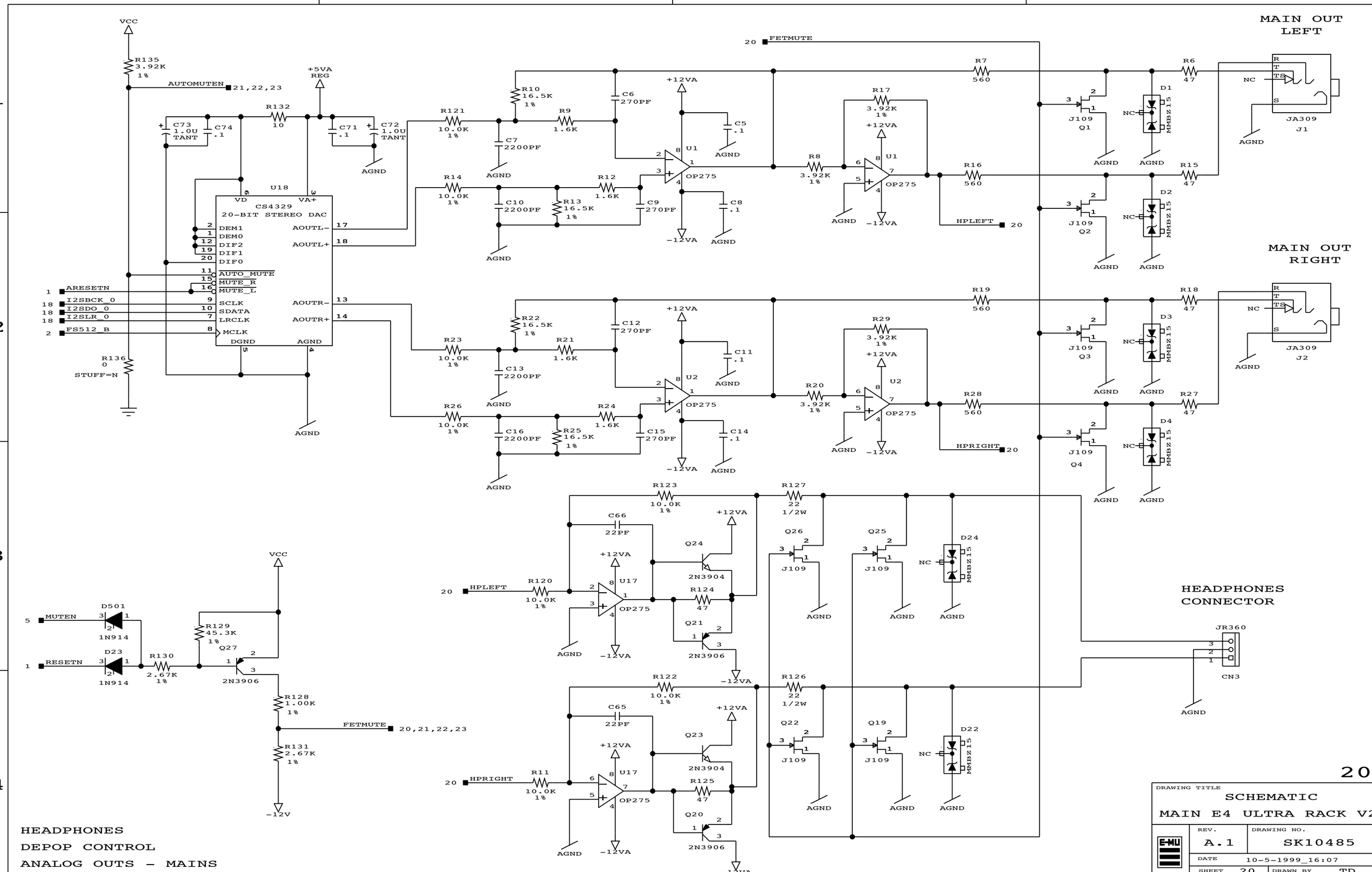
MAIN OUT LEFT
MAIN OUT RIGHT
HEADPHONES CONNECTOR
HEADPHONES DEPOP CONTROL ANALOG OUTS - MAINS
CS4329 20-BIT STEREO DAC
U18
OP275
U1
U2
U17
J109
MMBZ15
JA309
JR360
2N3904
2N3906
1N914
AUTOMUTEN
FETMUTE
HPLEFT
HPRIGHT
ARESETN
I2SBCK_0
I2SDO_0
I2SLR_0
FS512_B
MUTEN
RESETN
VCC
AGND
DRAWING TITLE
SCHEMATIC
MAIN E4 ULTRA RACK V2
REV. A.1
DRAWING NO. SK10485
DATE 10-5-1999_16:07
SHEET 20
DRAWN BY TD
20

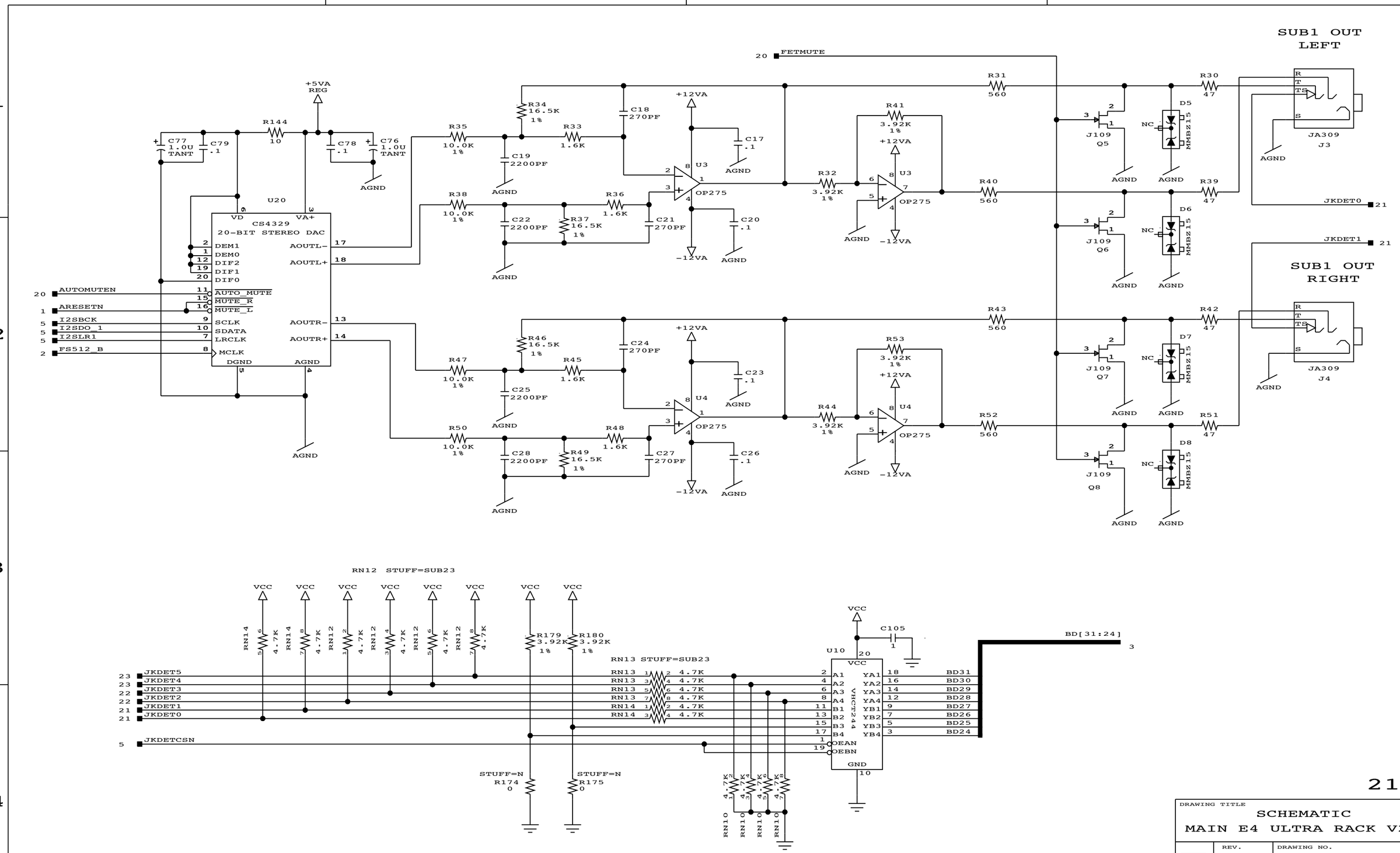
SUB1 OUT LEFT
SUB1 OUT RIGHT
FETMUTE
+5VA REG
U20
CS4329
20-BIT STEREO DAC
VD
VA+
DEM1
DEM0
DIF2
DIF1
DIF0
AOUTL-
AOUTL+
AUTO_MUTE
MUTE_R
MUTE_L
SCLK
SDATA
LRCLK
MCLK
AOUTR-
AOUTR+
DGND
AGND
AUTOMUTEN
ARESETN
I2SBCK
I2SDO_1
I2SLR1
FS512_B
U3
U4
OP275
+12VA
-12VA
J109
Q5
Q6
Q7
Q8
MMBZ15
D5
D6
D7
D8
JA309
J3
J4
JKDET0
JKDET1
RN12 STUFF=SUB23
RN13 STUFF=SUB23
RN10 STUFF=NO_SUB23
VCC
U10
VHCT244
BD[31:24]
JKDET5
JKDET4
JKDET3
JKDET2
JKDET1
JKDET0
JKDETCSN
STUFF=N
R174
R175
JACK DETECTION LATCH
ANALOG OUTS - SUB PAIR 1
DRAWING TITLE
SCHEMATIC
MAIN E4 ULTRA RACK V2
REV. A.1
DRAWING NO. SK10485
DATE 10-5-1999_16:07
SHEET 21
DRAWN BY TD
21

NOTE: ALL COMPONENTS ON THIS PAGE ARE STUFF=SUB2

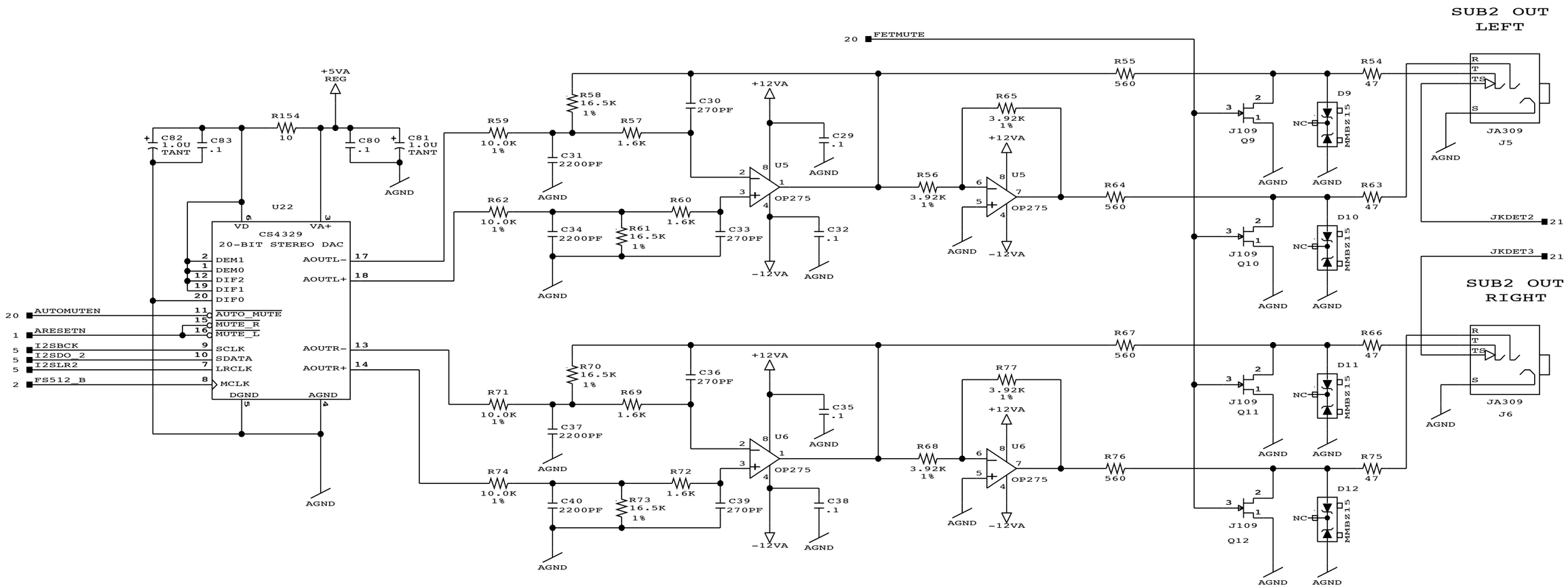

22

DRAWING TITLE		
SCHEMATIC MAIN E4 ULTRA RACK V2		
REV. A.1	DRAWING NO. SK10485	
DATE 10-5-1999_16:07		
SHEET 22	DRAWN BY TD	

ANALOG OUTS - SUB PAIR 2

NOTE: ALL COMPONENTS ON THIS PAGE ARE STUFF=SUB3

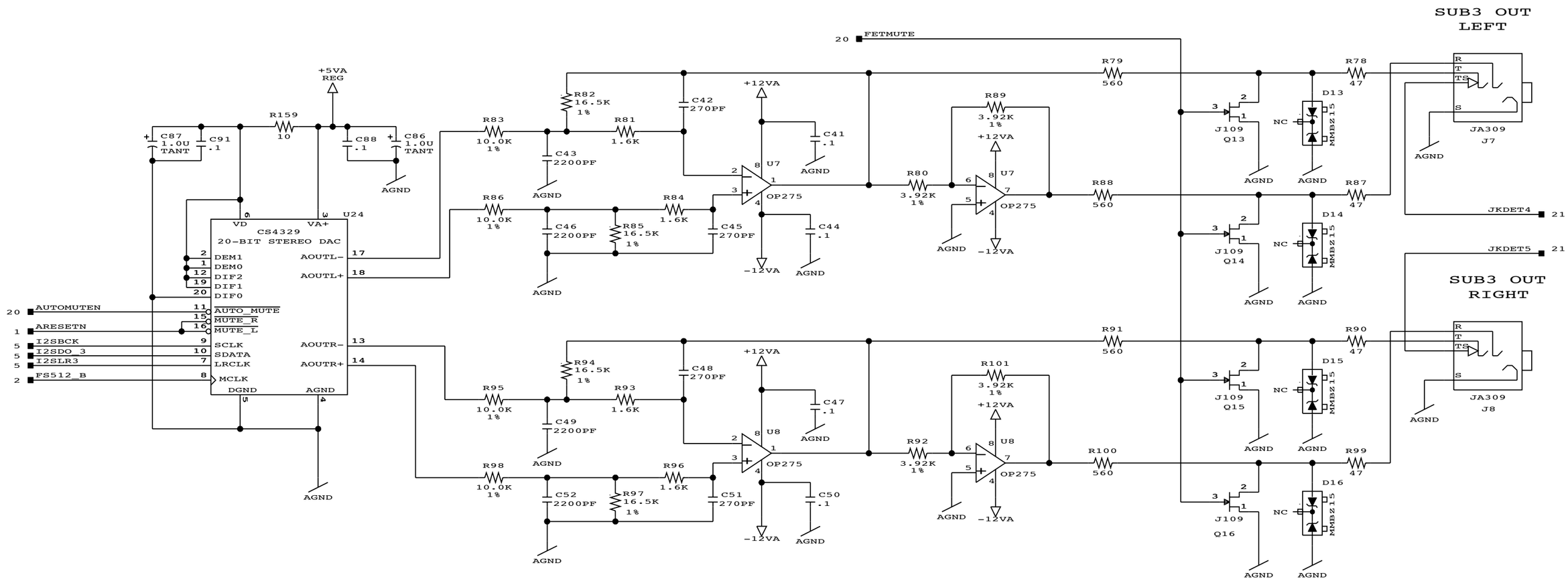

ANALOG OUTS - SUB PAIR 3

23

DRAWING TITLE		
SCHEMATIC MAIN E4 UTLRA RACK V2		
E-MU	REV. A.1	DRAWING NO. SK10485
	DATE 10-5-1999_16:07	
	SHEET 23	DRAWN BY TD

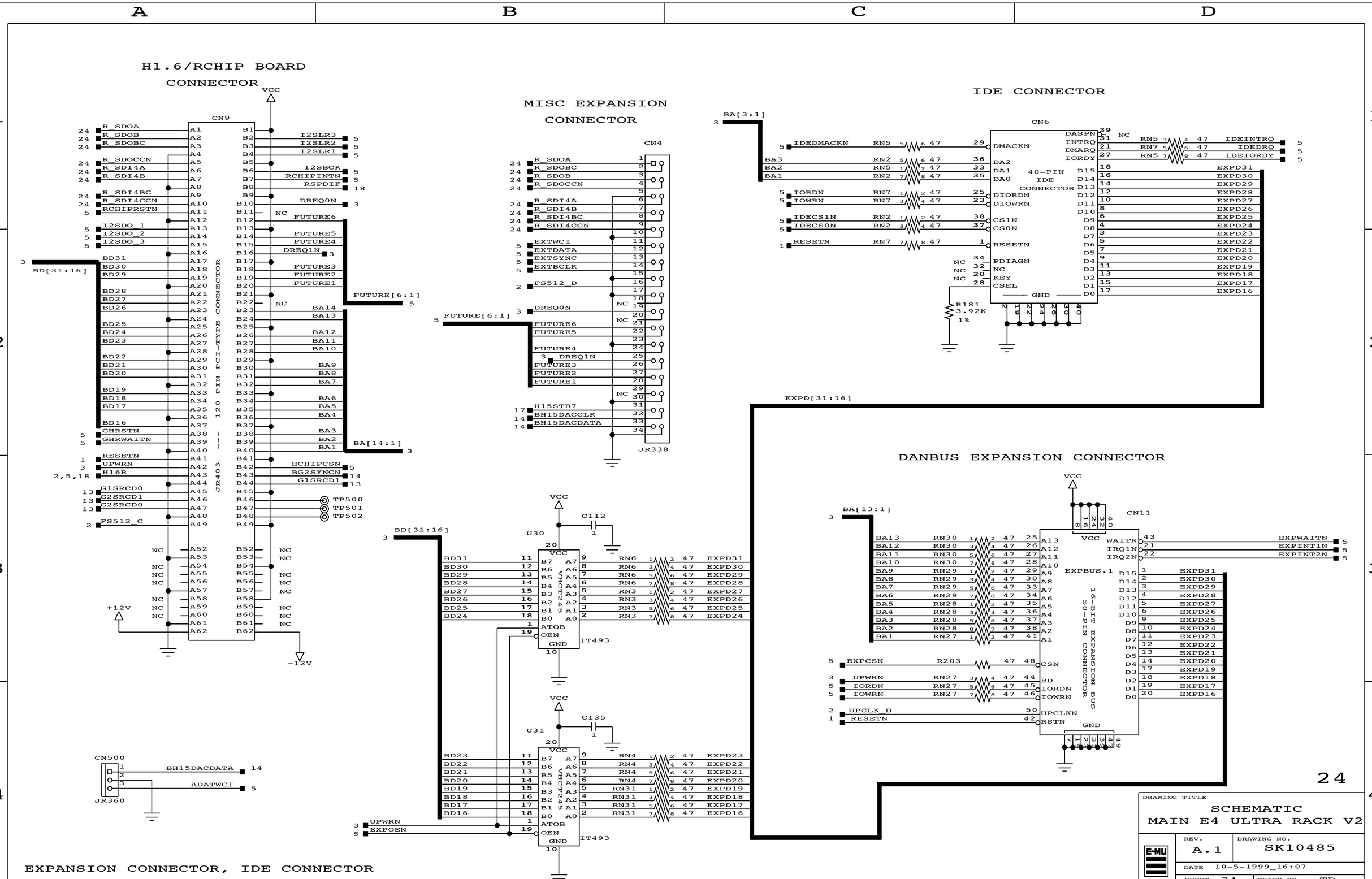
H1.6/RCHIP BOARD CONNECTOR
CN9
120 PIN PCI-TYPE CONNECTOR
JR403
MISC EXPANSION CONNECTOR
CN4
JR338
IDE CONNECTOR
CN6
40-PIN IDE CONNECTOR
DANBUS EXPANSION CONNECTOR
CN11
16-BIT EXPANSION BUS
50-PIN CONNECTOR
U30
U31
IT493
CN500
JR360
BD[31:16]
BA[14:1]
BA[13:1]
BA[3:1]
FUTURE[6:1]
EXPD[31:16]
EXPANSION CONNECTOR, IDE CONNECTOR
DRAWING TITLE
SCHEMATIC
MAIN E4 ULTRA RACK V2
REV. A.1
DRAWING NO. SK10485
DATE 10-5-1999_16:07
SHEET 24
DRAWN BY TD
24

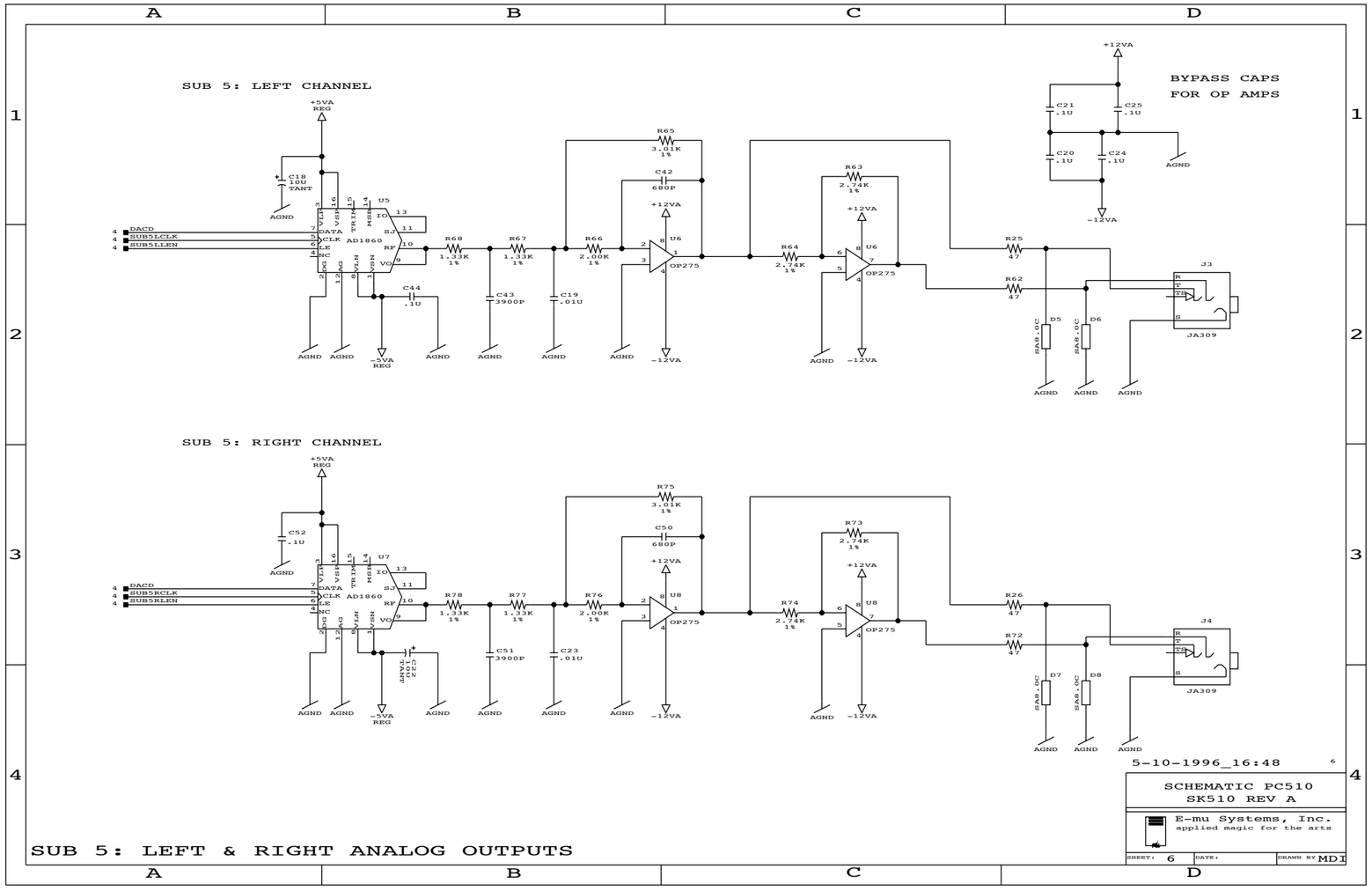

SUB 5: LEFT & RIGHT ANALOG OUTPUTS

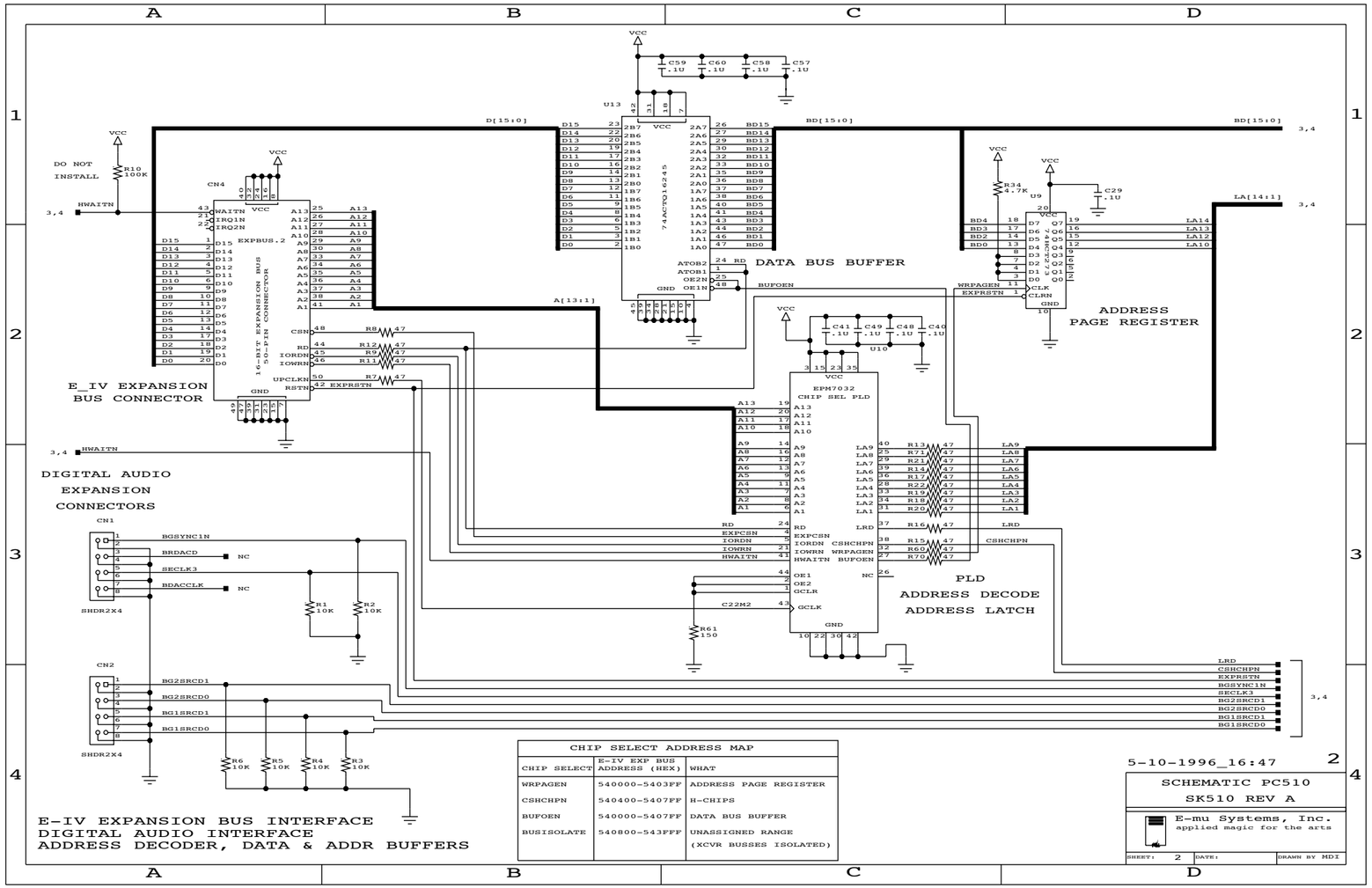

E-IV EXPANSION BUS INTERFACE
DIGITAL AUDIO INTERFACE
ADDRESS DECODER, DATA & ADDR BUFFERS

CHIP SELECT ADDRESS MAP		
CHIP SELECT	E-IV EXP BUS ADDRESS (HEX)	WHAT
WRPAGEN	540000-5403FF	ADDRESS PAGE REGISTER
CSHCHPN	540400-5407FF	H-CHIPS
BUFOEN	540000-5407FF	DATA BUS BUFFER
BUSISOLATE	540800-543FFF	UNASSIGNED RANGE (XCVR BUSSES ISOLATED)

5-10-1996_16:47

SCHEMATIC PC510
SK510 REV A

E-mu Systems, Inc.
applied magic for the arts

SHEET: 2 | DATE: | DRAWN BY MDI

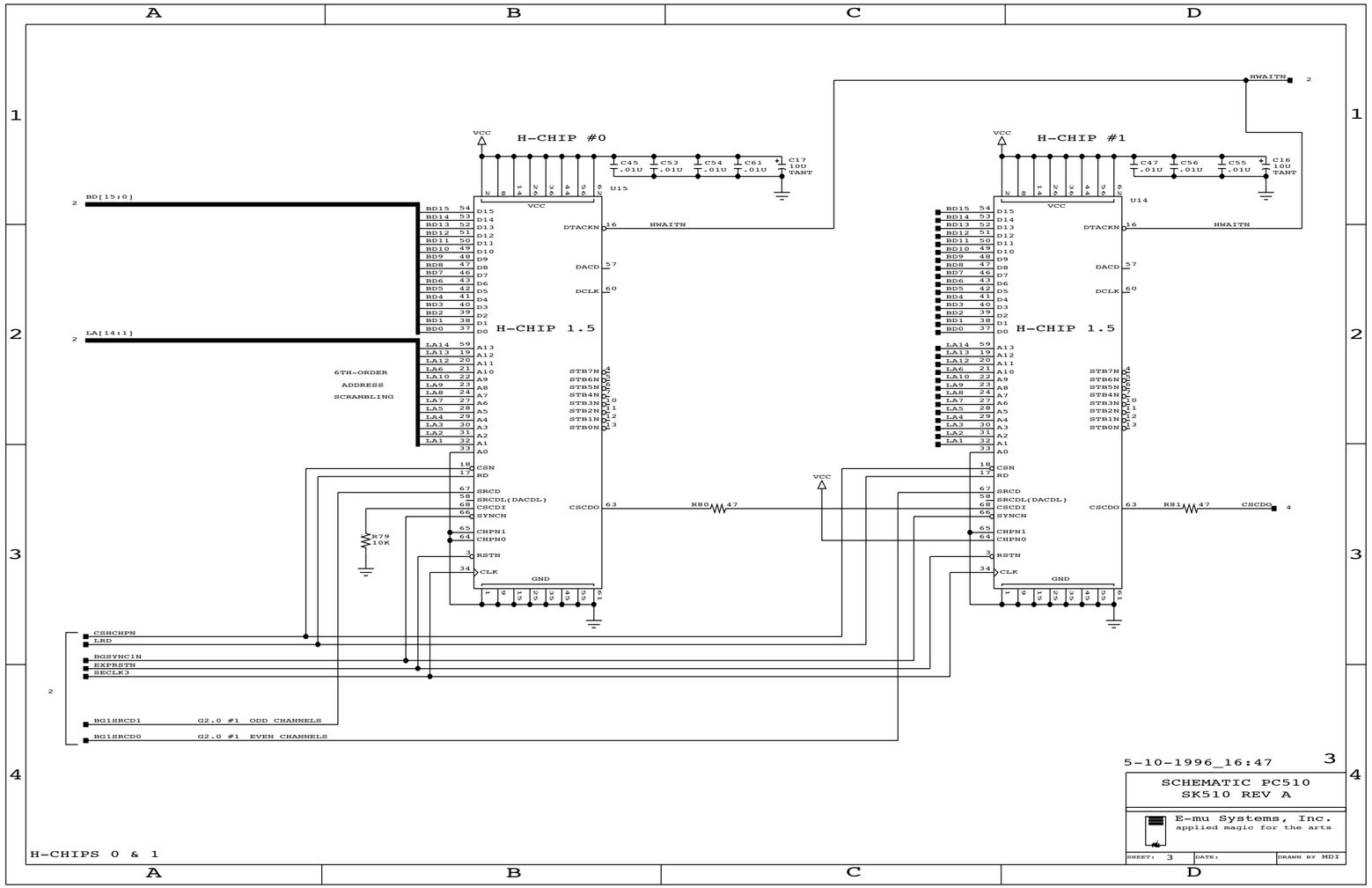
H-CHIP #0
H-CHIP #1
H-CHIP 1.5
H-CHIP 1.5
VCC
GND
U15
U14
C45 .01U
C53 .01U
C54 .01U
C61 .01U
C17 10U TANT
C47 .01U
C56 .01U
C55 .01U
C16 10U TANT
HWAITN
BD[15:0]
LA[14:1]
6TH-ORDER
ADDRESS
SCRAMBLING
DTACKN
DACD
DCLK
STB7N
STB6N
STB5N
STB4N
STB3N
STB2N
STB1N
STB0N
CSN
RD
SRCD
SRCDL(DACDL)
CSCDI
SYNCN
CHPN1
CHPN0
RSTN
CLK
CSCDO
R80 47
R81 47
CSCDO
R79 10K
CSHCHPN
LRD
BGSYNC1N
EXPRSTN
SECLK3
BG1SRCD1 G2.0 #1 ODD CHANNELS
BG1SRCD0 G2.0 #1 EVEN CHANNELS
5-10-1996_16:47
3
SCHEMATIC PC510
SK510 REV A
E-mu Systems, Inc.
applied magic for the arts
SHEET: 3
DATE:
DRAWN BY MDI
H-CHIPS 0 & 1

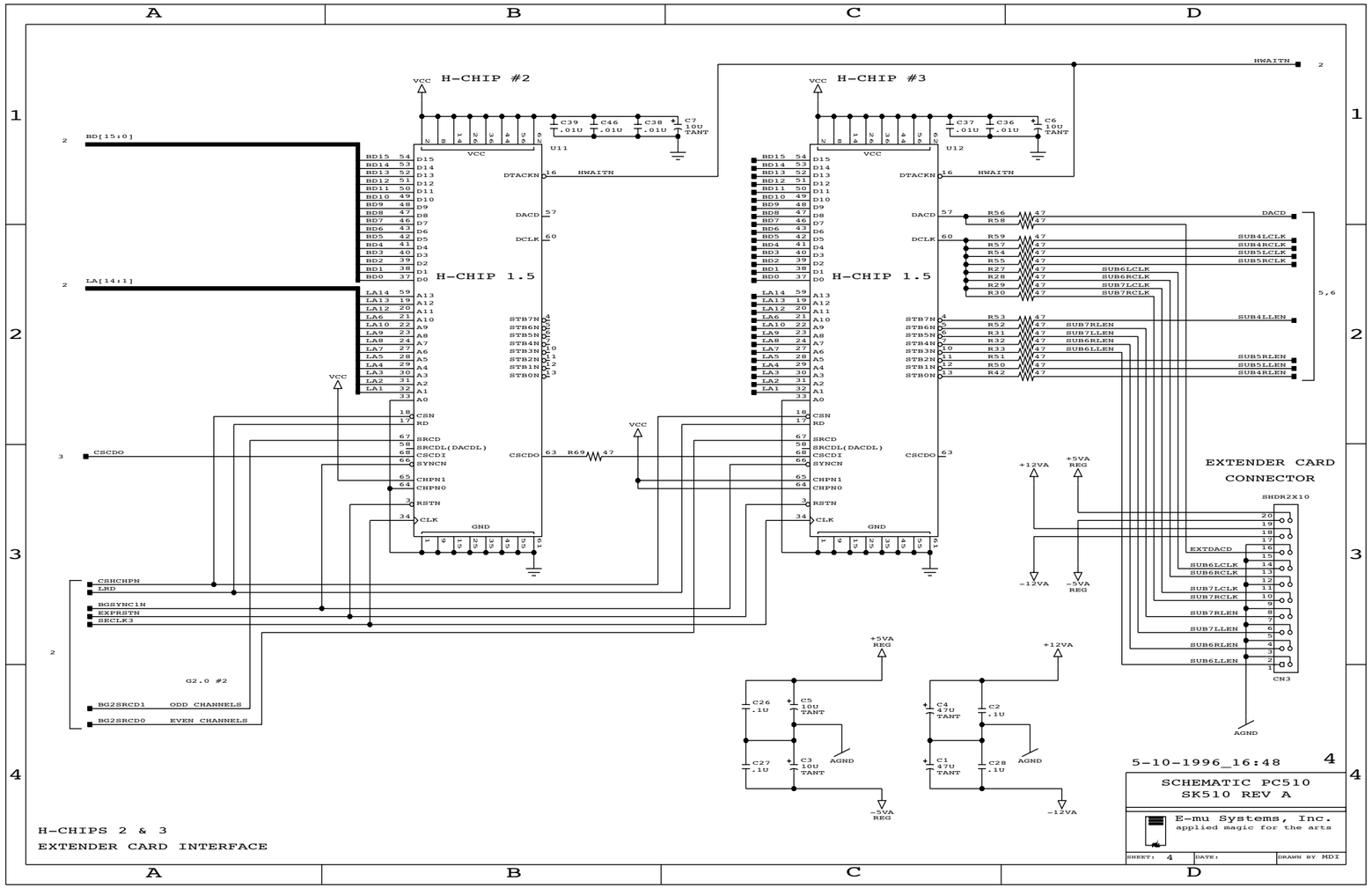
H-CHIP #2
H-CHIP #3
H-CHIP 1.5
H-CHIP 1.5
U11
U12
C39 .01U
C46 .01U
C38 .01U
C7 10U TANT
C37 .01U
C36 .01U
C6 10U TANT
BD[15:0]
LA[14:1]
CSCDO
CSHCHPN
LRD
BGSYNC1N
EXPRSTN
SECLK3
BG2SRCD1 ODD CHANNELS
BG2SRCD0 EVEN CHANNELS
G2.0 #2
HWAITN
DACD
DCLK
SUB4LCLK
SUB4RCLK
SUB5LCLK
SUB5RCLK
SUB6LCLK
SUB6RCLK
SUB7LCLK
SUB7RCLK
SUB4LLEN
SUB7RLEN
SUB7LLEN
SUB6RLEN
SUB6LLEN
SUB5RLEN
SUB5LLEN
SUB4RLEN
EXTENDER CARD CONNECTOR
SHDR2X10
CN3
EXTDACD
+12VA
-12VA
+5VA REG
-5VA REG
AGND
C26 .1U
C5 10U TANT
C27 .1U
C3 10U TANT
C4 47U TANT
C2 .1U
C1 47U TANT
C28 .1U
5-10-1996_16:48
SCHEMATIC PC510
SK510 REV A
E-mu Systems, Inc.
applied magic for the arts
SHEET: 4
DATE:
DRAWN BY MDI
H-CHIPS 2 & 3
EXTENDER CARD INTERFACE

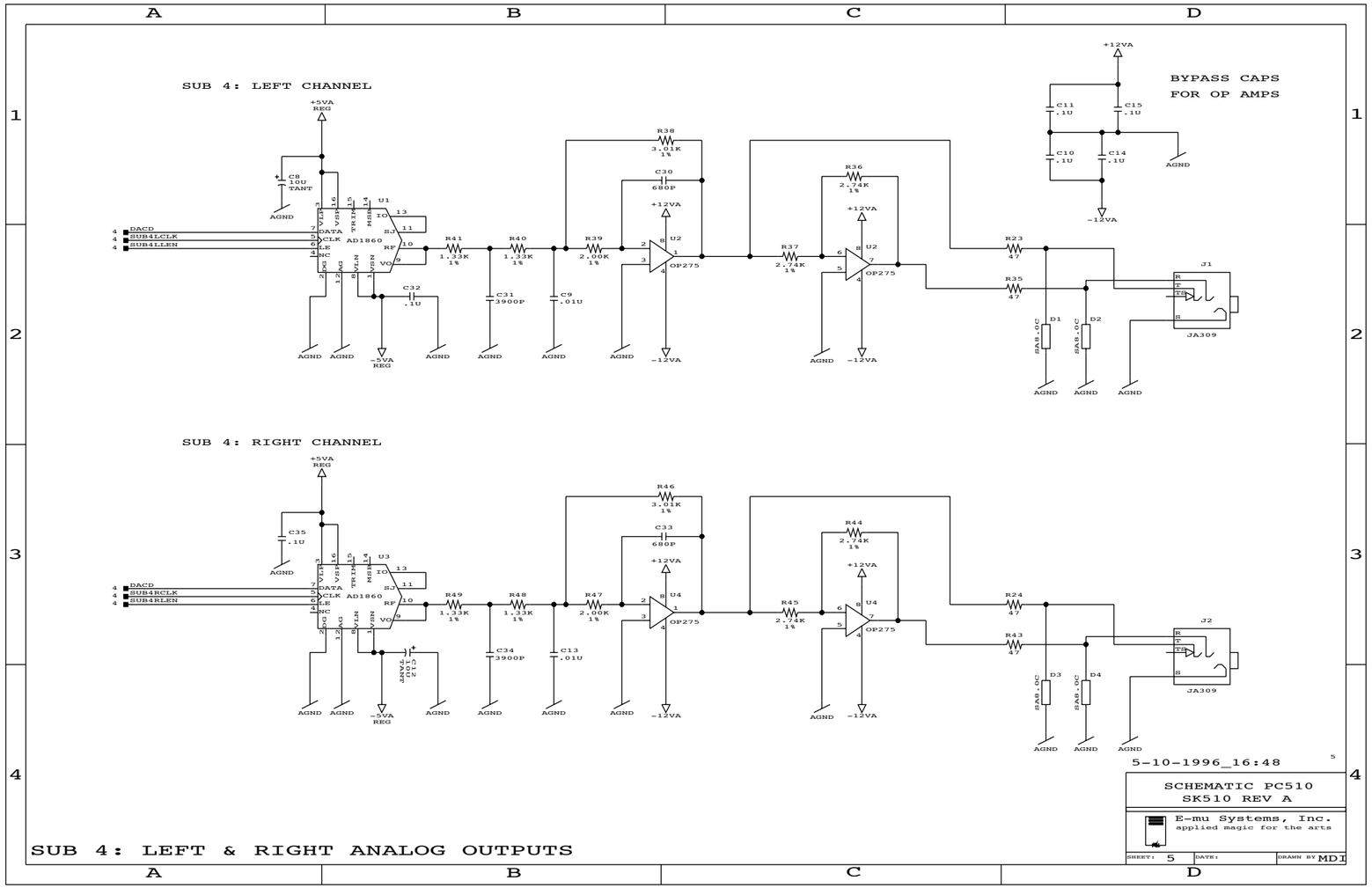

SUB 4: LEFT & RIGHT ANALOG OUTPUTS

SCHEMATIC INDEX:

SHEET #	CIRCUIT FUNCTIONS
1	MOUNTING HOLES, TEST POINTS
2	EXP BUS INTERFACE, DIG AUDIO INTERFACE, ADDR DECODING
3	H-CHIPS: 0 & 1
4	H-CHIPS: 2 & 3, EXTENDER CARD INTERFACE
5	SUB 4: LEFT & RIGHT ANALOG OUTPUTS
6	SUB 5: LEFT & RIGHT ANALOG OUTPUTS

REVISIONS

ECO	ZONE	LTR	DESCRIPTION	DATE	APPR.
2979		A	PRODUCTION RELEASE		

MOUNTING HOLES

GND TEST POINTS

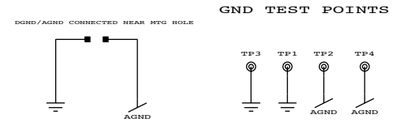

POWER SUPPLY CONNECTIONS

5-10-1996_16:47 1

E-mu Systems, Inc.
applied magic for the arts
1600 Green Hills Road
Scotts Valley, California 95066

DRAWING TITLE: SCHEMATIC LOWER BOARD PC510

SIZE	REV.	DRAWING NO.
D	A	SK510

SCALE	DATE	APPR

SHEET: 1 OF 6 DRAWN BY MDI

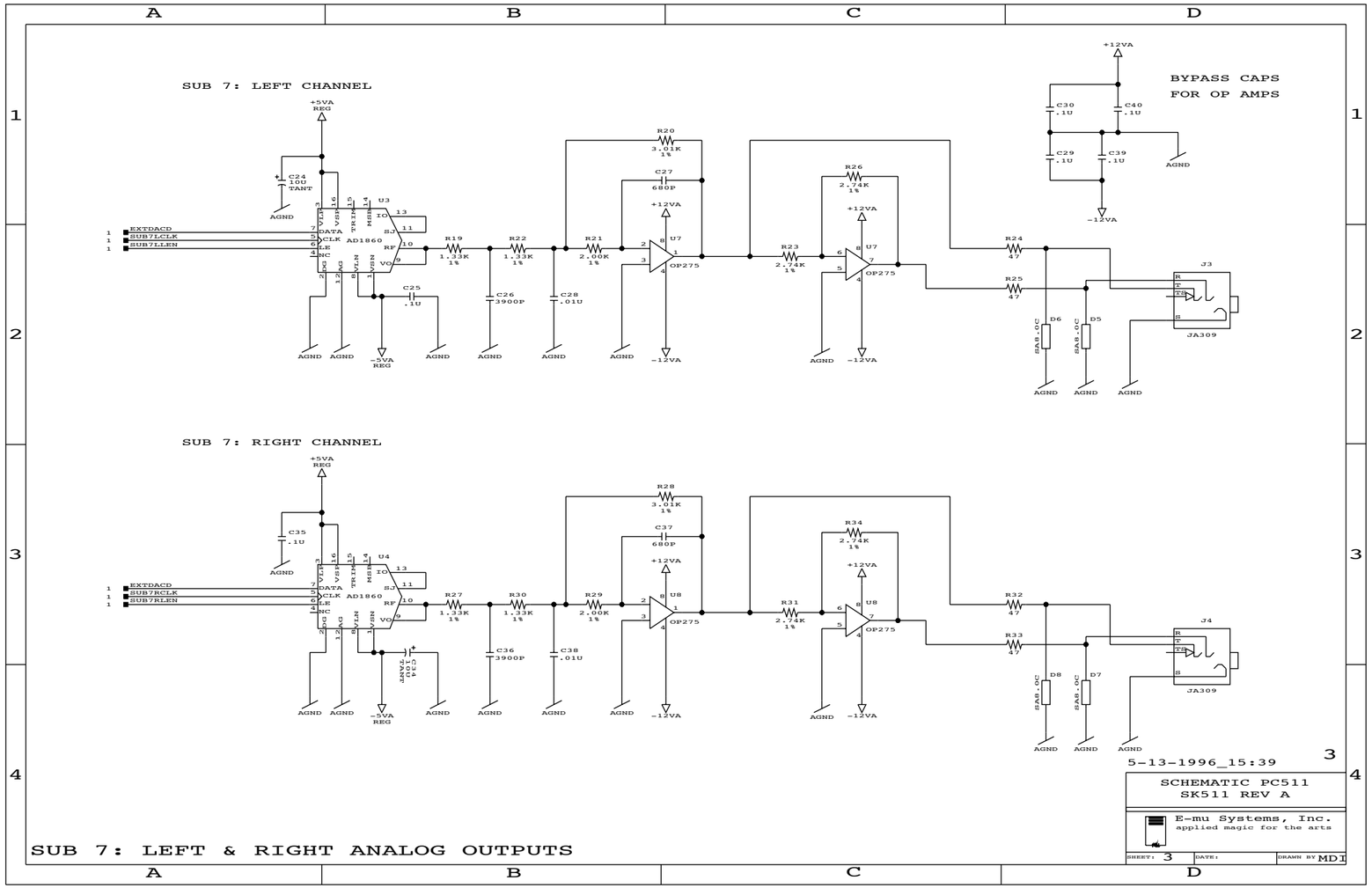

SUB 7: LEFT & RIGHT ANALOG OUTPUTS

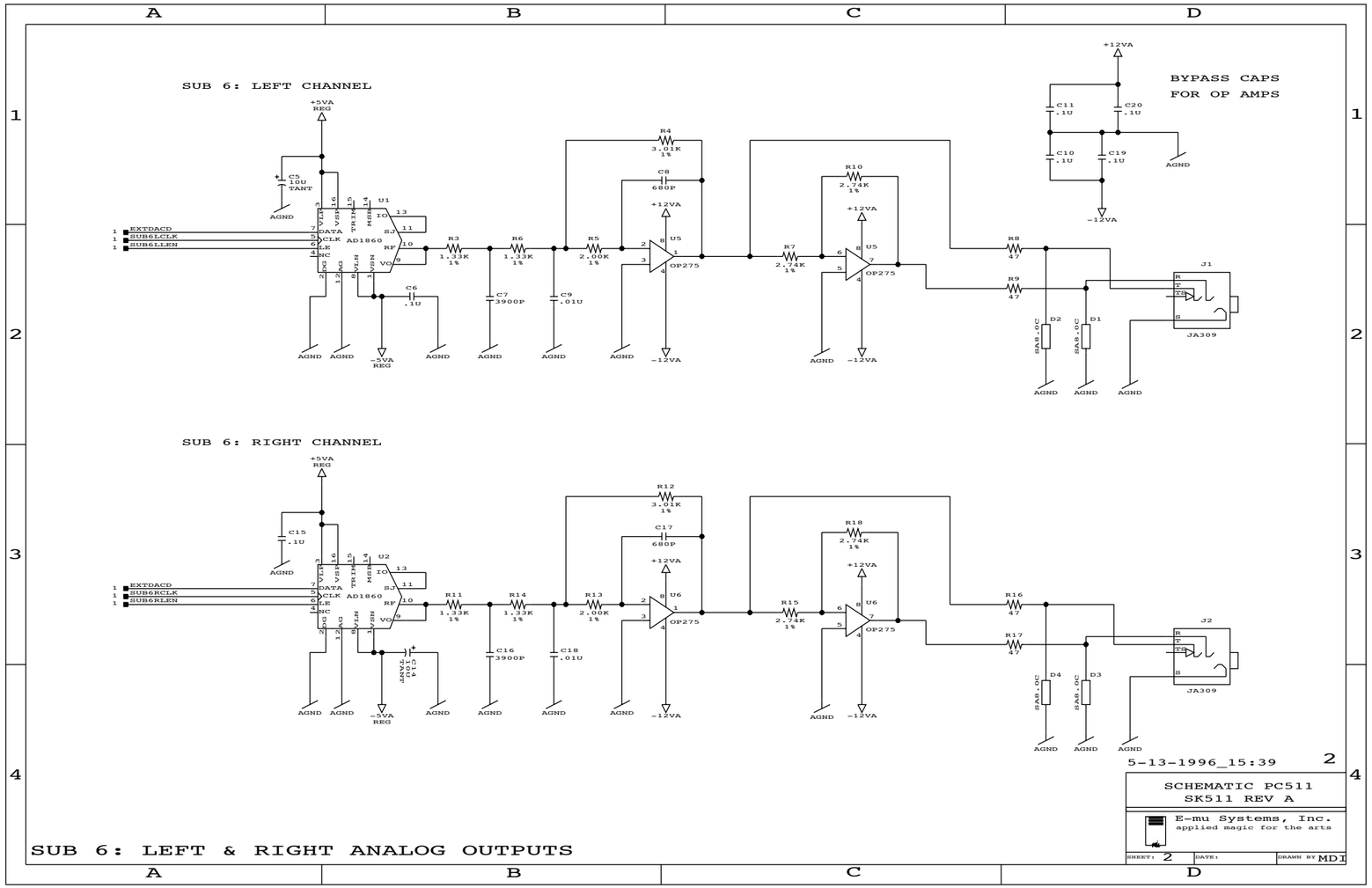
SUB 6: LEFT CHANNEL
SUB 6: RIGHT CHANNEL
BYPASS CAPS
FOR OP AMPS
+5VA
REG
-5VA
REG
+12VA
-12VA
AGND
EXTDACD
SUB6LCLK
SUB6LLEN
SUB6RCLK
SUB6RLEN
AD1860
OP275
JA309
J1
J2
U1
U2
U5
U6
R3
R4
R5
R6
R7
R8
R9
R10
R11
R12
R13
R14
R15
R16
R17
R18
C5
C6
C7
C8
C9
C10
C11
C15
C16
C17
C18
C19
C20
D1
D2
D3
D4
5-13-1996_15:39
2
SCHEMATIC PC511
SK511 REV A
E-mu Systems, Inc.
applied magic for the arts
SHEET: 2
DATE:
DRAWN BY MDI
SUB 6: LEFT & RIGHT ANALOG OUTPUTS

REVISIONS

ECO	ZONE	LTR	DESCRIPTION	DATE	APPR.
2979		A	PRODUCTION RELEASE		

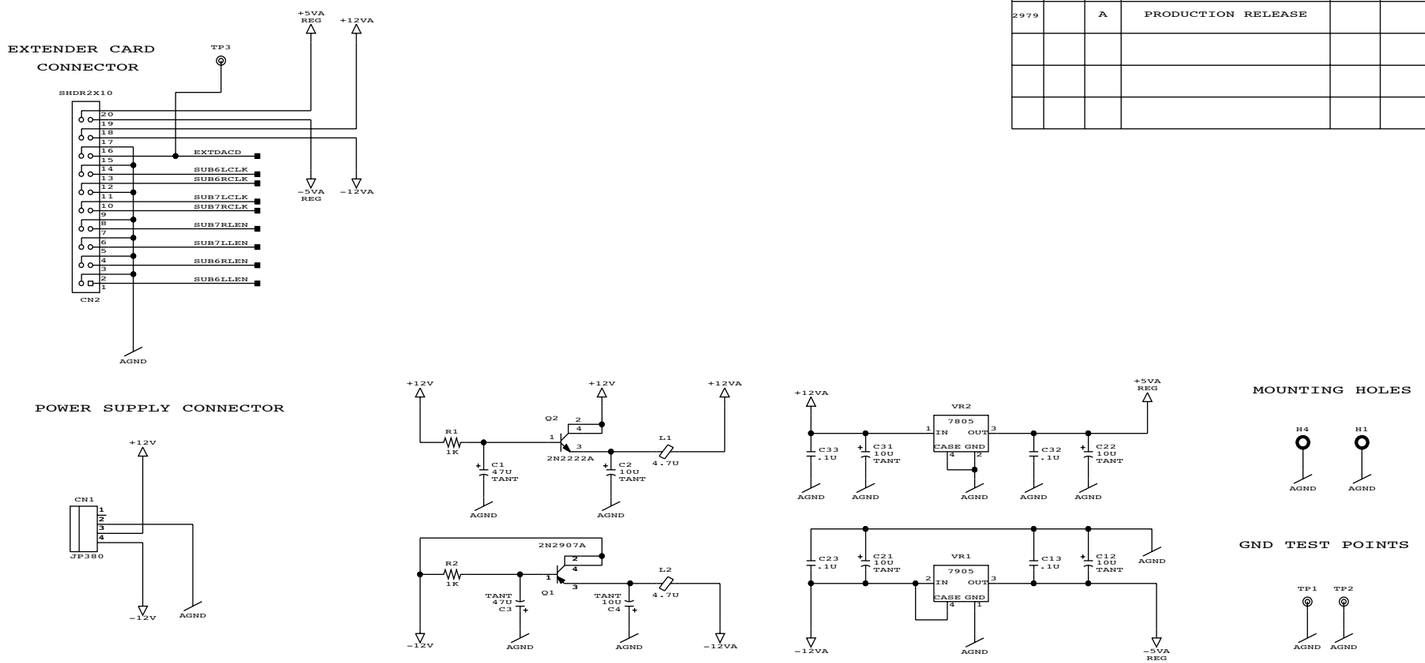

5-13-1996_16:39 1

E-mu Systems, Inc.
applied magic for the arts
1600 Green Hills Road
Scotts Valley, California 95066

DRAWING TITLE: SCHEMATIC UPPER BOARD PC511

SIZE	REV.	DRAWING NO.
D	A	SK511

SCALE	DATE	APPR

SHEET: 1 OF 3 DRAWN BY MDI

EXPANSION CARD INTERFACE

SCHEMATIC INDEX:

REVISIONS

ECO	ZONE	LTR	DESCRIPTION	DATE	APPR.
3449		A	PRODUCTION RELEASE	4/99	TD

MOUNTING HOLES

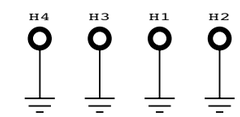

GND TEST POINTS

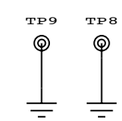

5-14-1999_11:48

1

E-mu Systems, Inc.
applied magic for the arts
1600 Green Hills Road
Scotts Valley, California 95066

DRAWING TITLE		
SCHEMATIC E4 ADAT SK639 REV B		
SIZE D	REV. B	DRAWING NO. SK639
SCALE	DATE	APPR
SHEET: 1 OF 5		DRAWN BY AV

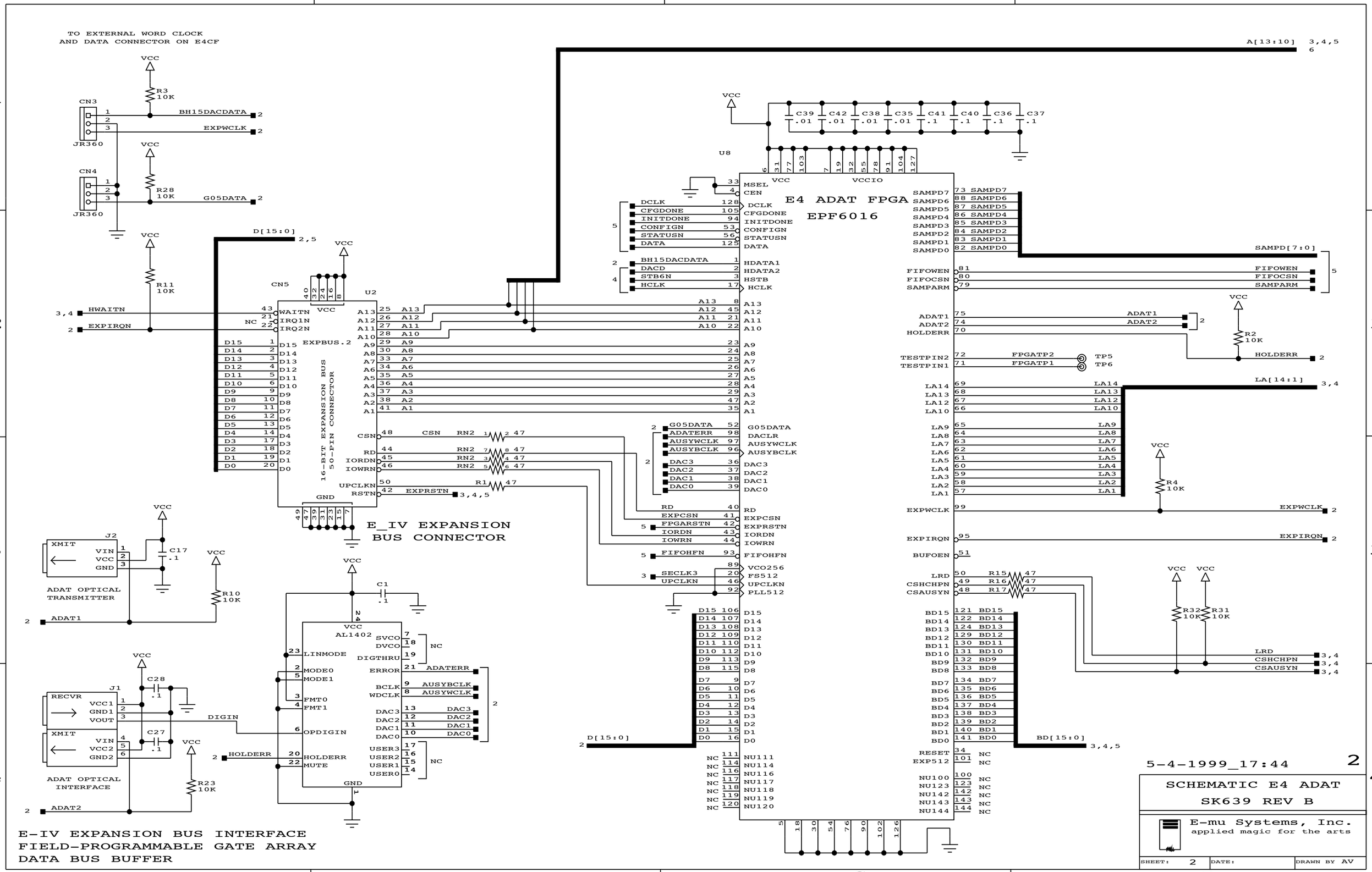
TO EXTERNAL WORD CLOCK
AND DATA CONNECTOR ON E4CF
CN3
JR360
BH15DACDATA
EXPWCLK
CN4
JR360
G05DATA
R3 10K
R28 10K
R11 10K
D[15:0]
HWAITN
EXPIRQN
CN5
U2
EXPBUS.2
16-BIT EXPANSION BUS
50-PIN CONNECTOR
E_IV EXPANSION
BUS CONNECTOR
U8
E4 ADAT FPGA
EPF6016
A[13:10]
SAMPD[7:0]
FIFOWEN
FIFOCSN
SAMPARM
ADAT1
ADAT2
HOLDERR
TESTPIN2
TESTPIN1
FPGATP2
FPGATP1
TP5
TP6
LA[14:1]
EXPWCLK
EXPIRQN
BUFOEN
LRD
CSHCHPN
CSAUSYN
BD[15:0]
RESET
EXP512
J2
XMIT
VIN
VCC
GND
ADAT OPTICAL
TRANSMITTER
R10 10K
C17 .1
J1
RECVR
VCC1
GND1
VOUT
XMIT
VIN
VCC2
GND2
ADAT OPTICAL
INTERFACE
C28 .1
C27 .1
DIGIN
R23 10K
AL1402
LINMODE
MODE0
MODE1
FMT0
FMT1
OPDIGIN
HOLDERR
MUTE
SVCO
DVCO
DIGTHRU
ERROR
BCLK
WDCLK
DAC3
DAC2
DAC1
DAC0
USER3
USER2
USER1
USER0
ADATERR
AUSYBCLK
AUSYWCLK
C1 .1
E-IV EXPANSION BUS INTERFACE
FIELD-PROGRAMMABLE GATE ARRAY
DATA BUS BUFFER
5-4-1999_17:44
SCHEMATIC E4 ADAT
SK639 REV B
E-mu Systems, Inc.
applied magic for the arts
SHEET: 2
DATE:
DRAWN BY AV

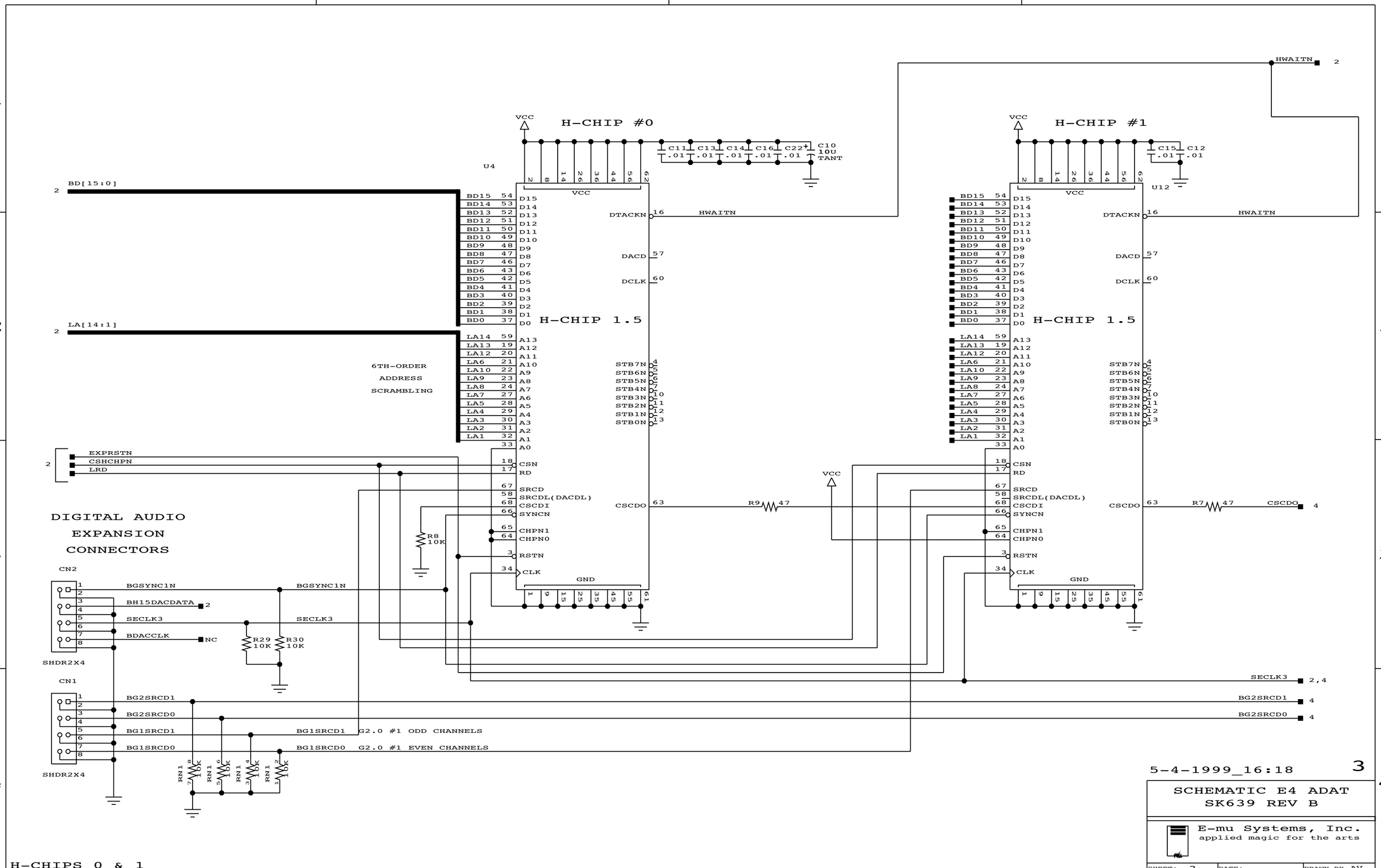
H-CHIP #0
H-CHIP #1
H-CHIP 1.5
U4
U12
VCC
C11 .01
C13 .01
C14 .01
C16 .01
C22 .01
C10 10U TANT
C15 .01
C12 .01
HWAITN
DTACKN
DACD
DCLK
STB7N
STB6N
STB5N
STB4N
STB3N
STB2N
STB1N
STB0N
CSCDO
R9 47
R7 47
CSCDO
BD[15:0]
LA[14:1]
6TH-ORDER
ADDRESS
SCRAMBLING
EXPRSTN
CSHCHPN
LRD
CSN
RD
SRCD
SRCDL(DACDL)
CSCDI
SYNCN
CHPN1
CHPN0
RSTN
CLK
GND
R8 10K
DIGITAL AUDIO
EXPANSION
CONNECTORS
CN2
SHDR2X4
BGSYNC1N
BH15DACDATA
SECLK3
BDACCLK
NC
R29 10K
R30 10K
CN1
BG2SRCD1
BG2SRCD0
BG1SRCD1
BG1SRCD0
G2.0 #1 ODD CHANNELS
G2.0 #1 EVEN CHANNELS
RN1 10K
H-CHIPS 0 & 1
5-4-1999_16:18
3
SCHEMATIC E4 ADAT
SK639 REV B
E-mu Systems, Inc.
applied magic for the arts
SHEET: 3
DATE:
DRAWN BY AV

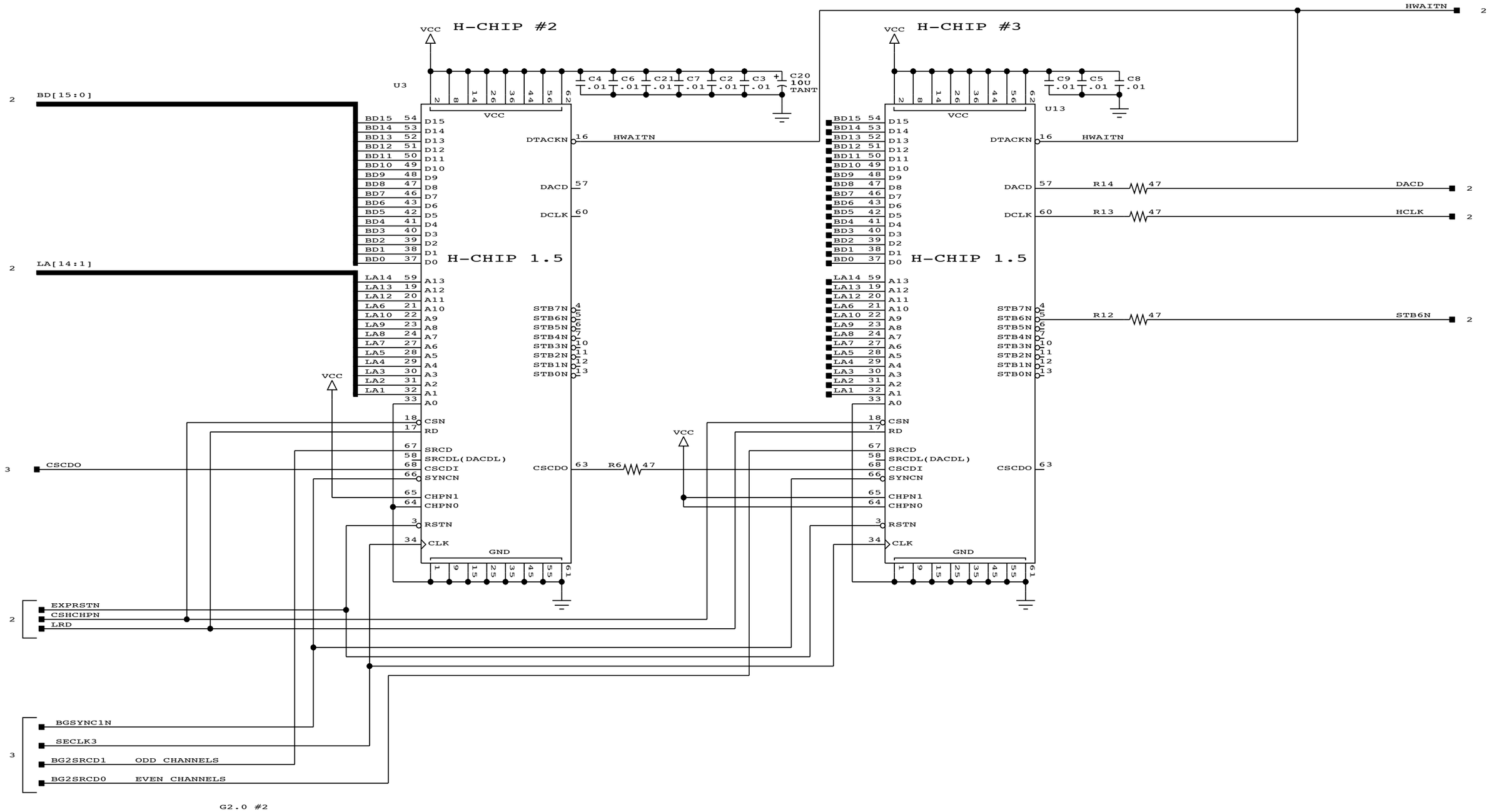

5-4-1999_16:18

4

SCHEMATIC E4 ADAT
SK639 REV B

E-mu Systems, Inc.
applied magic for the arts

SHEET: 4 | DATE: | DRAWN BY AV

H-CHIPS 2 & 3
EXTENDER CARD INTERFACE

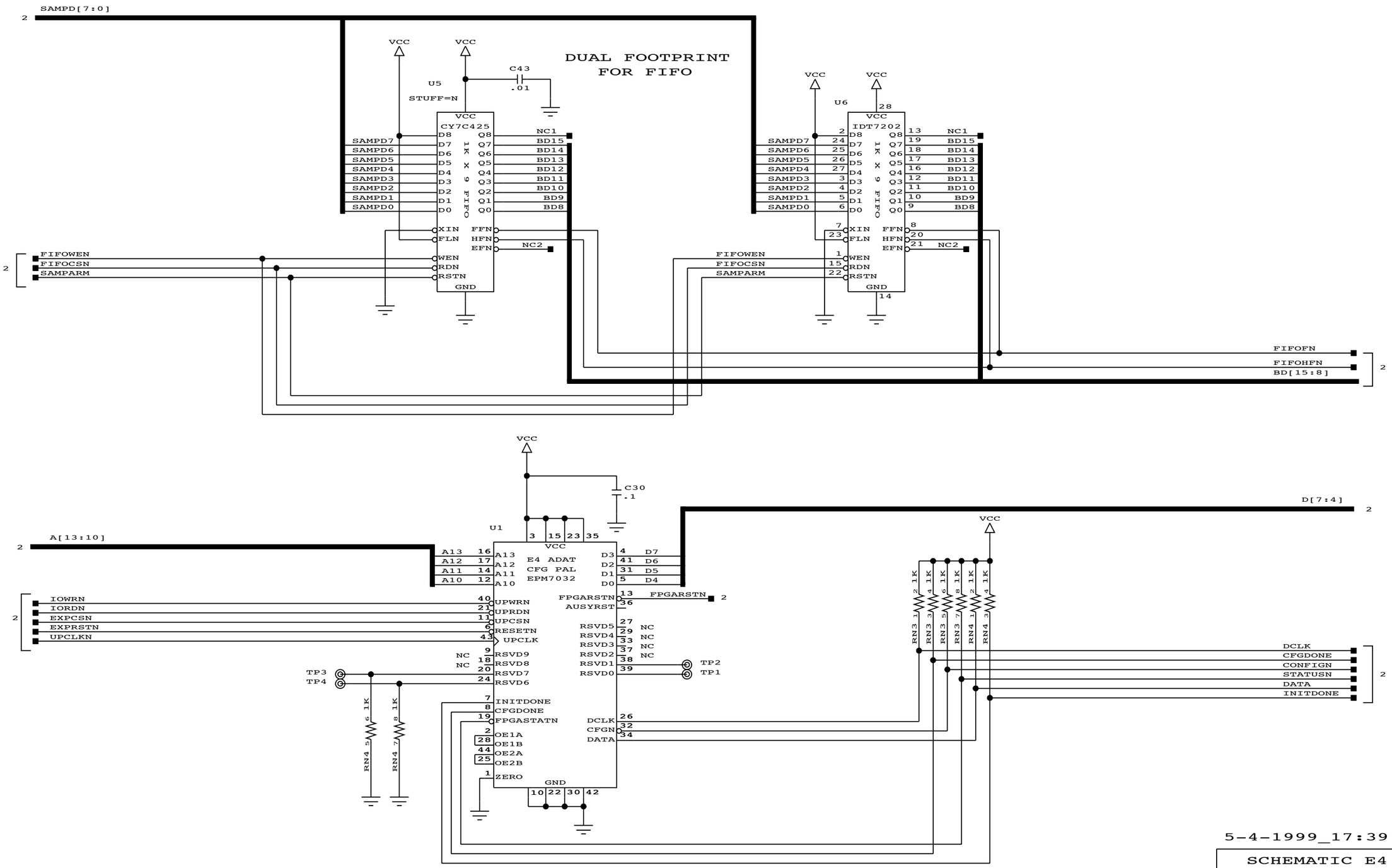

EPROM, BIT BLASTER AND PROCESSOR
INTERFACE FOR CONFIGURING FPGA,
SAMPLE FIFO

5-4-1999_17:39

5

SCHEMATIC E4 ADAT
SK639 REV B

E-mu Systems, Inc.
applied magic for the arts

SHEET: 5	DATE:	DRAWN BY AV

SCHEMATIC INDEX:

SHEET #	CIRCUIT FUNCTIONS
1	MOUNTING HOLES, TEST POINTS
2	EXP BUS INTERFACE, FPGA, ADAT RECEIVER
3	H-CHIPS: 0 & 1
4	H-CHIPS: 2 & 3
5	SAMPLING FIFO, FPGA CONFIGURATION PAL

REVISIONS

ECO	ZONE	LTR	DESCRIPTION	DATE	APPR.
		1	REDESIGN SK639		
3519		A.1	ALESIS AL1402 CHIP	11/99	TD

MOUNTING HOLES

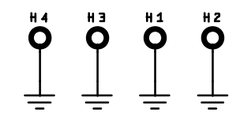

GND TEST POINTS

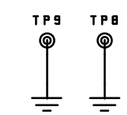

11-5-1999_15:15 1

E-mu Systems, Inc.
applied magic for the arts
1600 Green Hills Road
Scotts Valley, California 95066

DRAWING TITLE
SCHEMATIC
E4 ADAT W/ AL1402

SIZE	REV.	DRAWING NO.
D	A.1	SK10255

SCALE	DATE	APPR	TD
SHEET: 1 OF 5		DRAWN BY	AV

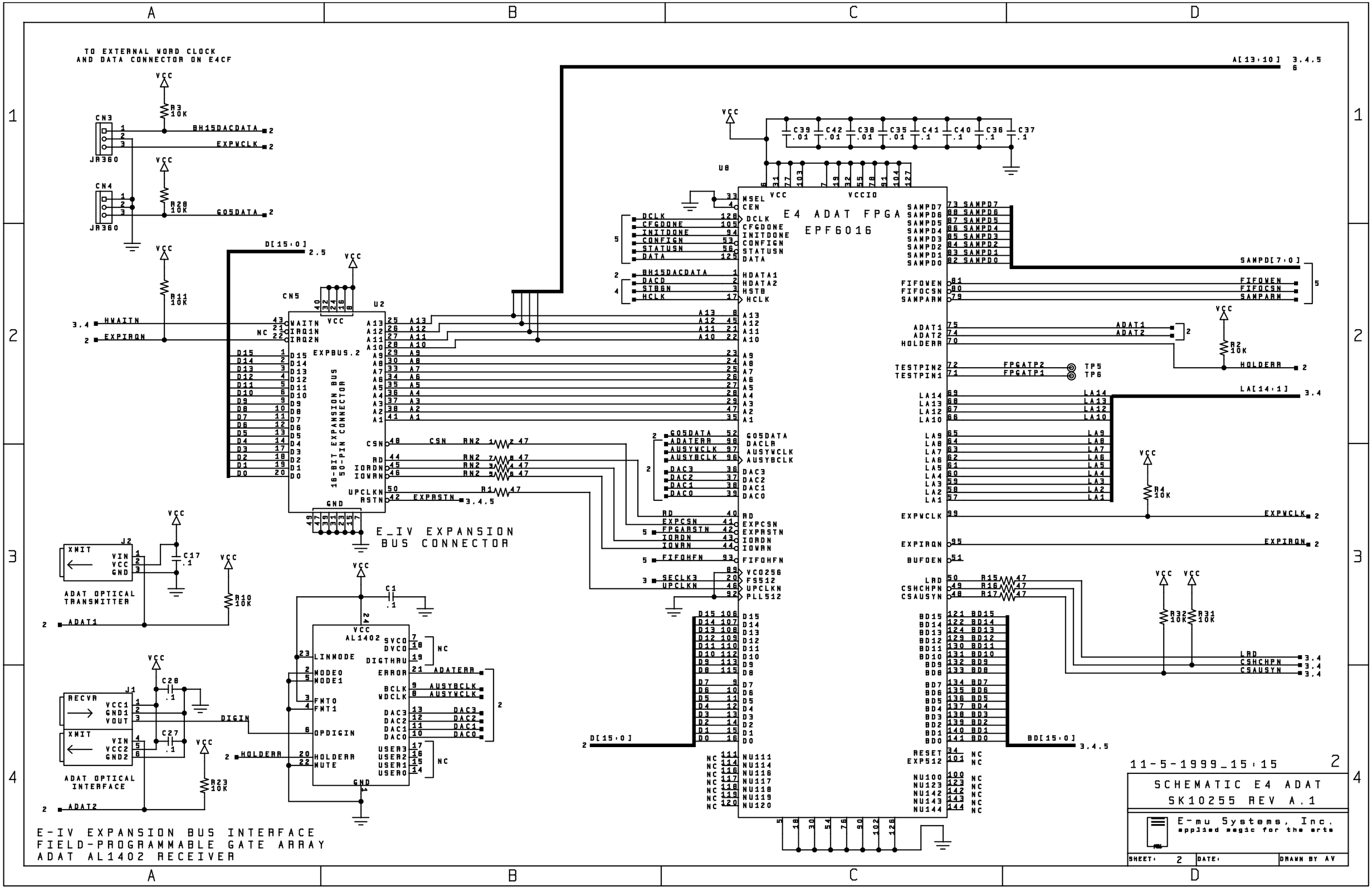
TO EXTERNAL WORD CLOCK
AND DATA CONNECTOR ON E4CF
CN3
JR360
CN4
JR360
BH15DACDATA
EXPWCLK
G05DATA
R3 10K
R28 10K
R11 10K
HWAITN
EXPIRQN
D[15:0]
CN5
U2
EXPBUS.2
16-BIT EXPANSION BUS 50-PIN CONNECTOR
E_IV EXPANSION BUS CONNECTOR
CSN
RN2
R1
EXPRSTN
U8
E4 ADAT FPGA
EPF6016
VCC
VCCIO
MSEL
CEN
DCLK
CFGDONE
INITDONE
CONFIGN
STATUSN
DATA
HDATA1
HDATA2
HSTB
HCLK
A13
A12
A11
A10
A9
A8
A7
A6
A5
A4
A3
A2
A1
G05DATA
ADATERR
AUSYWCLK
AUSYBCLK
DACLR
DAC3
DAC2
DAC1
DAC0
RD
EXPCSN
EXPRSTN
IORDN
IOWRN
FIFOHFN
VCO256
FS512
UPCLKN
PLL512
SAMPD7
SAMPD6
SAMPD5
SAMPD4
SAMPD3
SAMPD2
SAMPD1
SAMPD0
SAMPD[7:0]
FIFOWEN
FIFOCSN
SAMPARM
ADAT1
ADAT2
HOLDERR
TESTPIN2
TESTPIN1
FPGATP2
FPGATP1
TP5
TP6
LA14
LA13
LA12
LA10
LA9
LA8
LA7
LA6
LA5
LA4
LA3
LA2
LA1
LA[14:1]
EXPWCLK
EXPIRQN
BUFOEN
LRD
CSHCHPN
CSAUSYN
BD15
BD14
BD13
BD12
BD11
BD10
BD9
BD8
BD7
BD6
BD5
BD4
BD3
BD2
BD1
BD0
BD[15:0]
RESET
EXP512
NU111
NU114
NU116
NU117
NU118
NU119
NU120
NU100
NU123
NU142
NU143
NU144
R2 10K
R4 10K
R32 10K
R31 10K
R15 47
R16 47
R17 47
C39 .01
C42 .01
C38 .01
C35 .01
C41 .1
C40 .1
C36 .1
C37 .1
J2
XMIT
VIN
VCC
GND
ADAT OPTICAL TRANSMITTER
C17 .1
R10 10K
ADAT1
C1 .1
AL1402
LINNODE
MODE0
MODE1
FMT0
FMT1
OPDIGIN
HOLDERR
MUTE
SVCO
DVCO
DIGTHRU
ERROR
BCLK
WDCLK
USER3
USER2
USER1
USER0
NC
J1
RECVR
VCC1
GND1
VOUT
VCC2
GND2
ADAT OPTICAL INTERFACE
C28 .1
C27 .1
DIGIN
R23 10K
ADAT2
E-IV EXPANSION BUS INTERFACE
FIELD-PROGRAMMABLE GATE ARRAY
ADAT AL1402 RECEIVER
11-5-1999_15:15
SCHEMATIC E4 ADAT
SK10255 REV A.1
E-mu Systems, Inc.
applied magic for the arts
SHEET: 2
DATE:
DRAWN BY AV

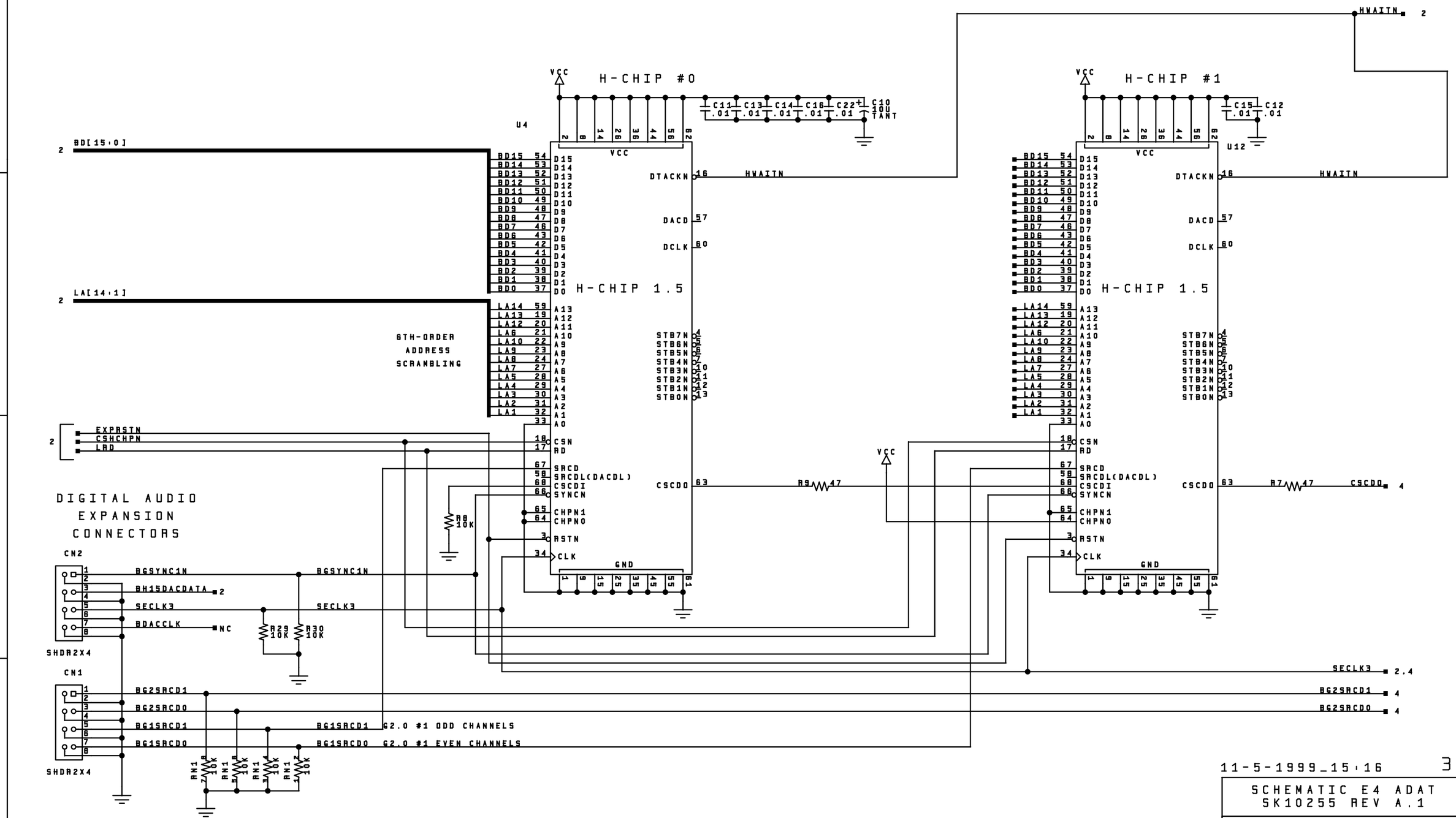
H-CHIP #0
H-CHIP #1
H-CHIP 1.5
U4
U12
VCC
GND
C11 .01
C13 .01
C14 .01
C16 .01
C22 .01
C10 10U TANT
C15 .01
C12 .01
BD[15:0]
LA[14:1]
6TH-ORDER ADDRESS SCRAMBLING
EXPRSTN
CSHCHPN
LRD
DTACKN
DACD
DCLK
STB7N
STB6N
STB5N
STB4N
STB3N
STB2N
STB1N
STB0N
CSN
RD
SRCD
SRCDL(DACDL)
CSCDI
SYNCN
CHPN1
CHPN0
RSTN
CLK
CSCDO
HWAITN
R9 47
R7 47
R8 10K
DIGITAL AUDIO EXPANSION CONNECTORS
CN2
SHDR2X4
BGSYNC1N
BH15DACDATA
SECLK3
BDACCLK
NC
R29 10K
R30 10K
CN1
BG2SRCD1
BG2SRCD0
BG1SRCD1
BG1SRCD0
G2.0 #1 ODD CHANNELS
G2.0 #1 EVEN CHANNELS
RN1 10K
11-5-1999_15:16
SCHEMATIC E4 ADAT
SK10255 REV A.1
E-mu Systems, Inc.
applied magic for the arts
SHEET: 3
DATE:
DRAWN BY AV
H-CHIPS 0 & 1

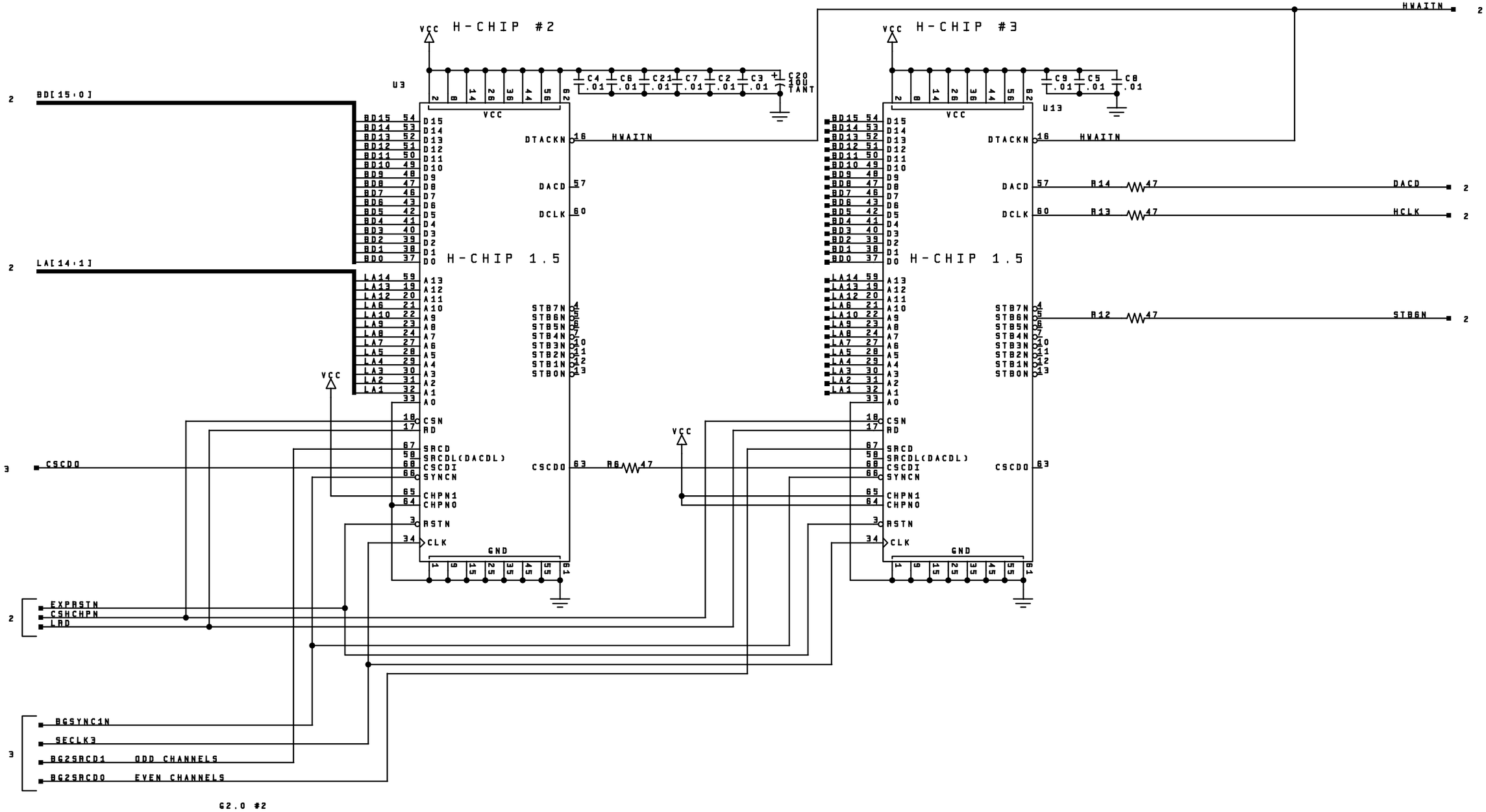

H-CHIPS 2 & 3

11-5-1999_15:16 4

SCHEMATIC E4 ADAT
SK10255 REV A.1

E-mu Systems, Inc.
applied magic for the arts

SHEET: 4 DATE: DRAWN BY AV

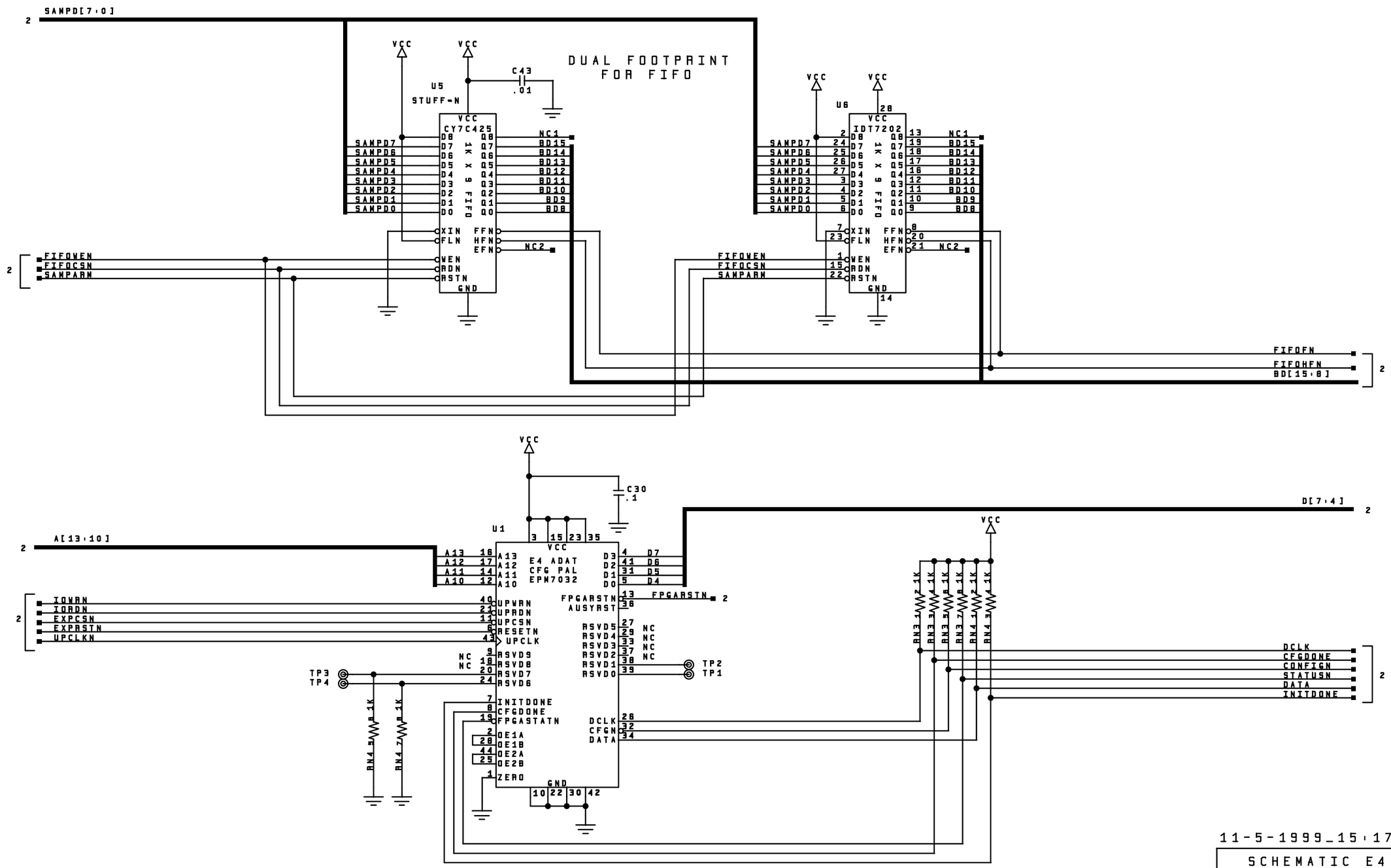
SAMPD[7:0]
DUAL FOOTPRINT
FOR FIFO
U5
STUFF=N
C43
.01
CY7C425
1K X 9 FIFO
U6
IDT7202
1K X 9 FIFO
FIFOWEN
FIFOCSN
SAMPARN
FIFOFN
FIFOHFN
BD[15:8]
C30
.1
U1
E4 ADAT
CFG PAL
EPM7032
A[13:10]
D[7:4]
IOWRN
IORDN
EXPCSN
EXPRSTN
UPCLKN
FPGARSTN
TP3
TP4
TP2
TP1
RN4 5
RN4 7
RN3 1
RN3 3
RN3 5
RN3 7
RN4 1
RN4 3
DCLK
CFGDONE
CONFIGN
STATUSN
DATA
INITDONE
11-5-1999_15:17
5
SCHEMATIC E4 ADAT
SK10255 REV A.1
E-mu Systems, Inc.
applied magic for the arts
SHEET: 5
DATE:
DRAWN BY AV
FPGA CONFIGURATION PAL
SAMPLE FIFO

Updates & Service Bulletins

This chapter outlines the various hardware and software updates for EOS samplers. Many of the hardware updates involve changing PAL (Programmable Logic Array). Others require soldering or cutting and jumping PCB traces.

EOS Update Checklist

EIV

AP413 Main Board

1. U46 NMI PAL should have IP860a installed.
2. U47 MEM Control PAL should have IP749c installed.
3. 48kHz Digital Rework Mod. – See attached instructions.
4. FS1 & FS2 should have polyswitch fuses installed.

AP437-01 Main Board

1. U46 NMI PAL should have IP860a installed.
2. U47 MEM PAL should have IP749c installed.

FS1 & FS2 should have polyswitch fuses installed.

AP437-01 Main Board

1. U46 NMI PAL should have IP860a installed.
2. U47 MEM PAL should have IP749c installed.
3. FS1 & FS2 should have polyswitch fuses installed.

E64

AP437-02 & AP500-02 Main Board

20nS - 55nS CPU RAMs

1. U46 should have IP860a installed.
2. U47 should have IP749c installed.

70nS CPU RAMs

1. U46 should have IP861a installed.
2. U47 should have IP805 installed.

FS1 & FS2 should have polyswitch fuses installed.

E6400, E4X, E-Synth Rack

AP524-00 & AP524-01 Main Board

1. U80 MEM PAL should have IP822d installed.
2. Check the voice board (AP503). It should have 10Ω resistors in locations R14 through R25. If 47Ω resistors are installed, replace with 10Ω.
3. Check for Deviation #3139 which eliminates flickering LCD.

4. Add 100µF 25V cap (CA342) between jumper W7 and resistor R382.
5. Check for Deviation #3210 (LCD requires more contrast current.)
6. Install jumper (JR334) at W6 and 0Ω (RR420) at location R382.
7. Check form Deviation #3092 (LCD backlight voltage too high.)
8. Perform rework of 2 cuts & jumps. (See deviation.)
9. Check U44 MFP. Replace ALL ST SGS Thompson 96 date code parts.

E4K, E-Synth Keyboard

1. U18 on the main board should have IP872A installed.
2. U49 on the main board, should have IP822D installed.
3. Check voice board (AP503) for 10Ω resistors installed in locations R14 through R25. If 47Ω resistors are installed, replace with 10Ω.
4. U28 on AP502 main board should have 74ACTQ153 installed. Replace `HC253 with `ACTQ153.

All EOS Units should have…

1. ".7" firmware or newer for EOS 2.0, EOS 2.5, EOS 2.51, EOS 3.0.
2. Boot ROM rev "1.0h" on E-Synth —1MB Flash must be installed for EOS 3.2 or higher.

   (Note: The Flash Prep disk must be used to install EOS 3.2.)
3. Boot ROM rev "2.0h" requires 2MB Flash for EOS 3.2 or higher.
4. ALWAYS initialize EEPROM and Recalibrate after installing a new version of EOS.

Technical Service Bulletins

TSB 630001
48k Digital Input Doesn't Work

Date: 9/3/98

Product(s) Affected: EIV AP413 only

Model Number: 6300

SYMPTOM

Digital AES pro input fails at 48kHz clock rate

PROBLEM

Engineering design flaw

EXPOSURE

All AP413 Main Boards

SOLUTION

1. Cut trace between pin 3 of U7 and adjacent via
2. Lift pins 1 and 2 of U7
3. Run a kynar 30 AWG jumper/wire from pin 3 of U7 to pin 2 of U39 (see drawing).
4. Run a second kynar jumper/wire from lifted pin 4 of U7 to the via on the trace originating at pin 3 of U39 (see drawing)
5. Run a third kynar jumper/wire from lifted pin 1 of U7 to the via on the trace originating at pin 5 of U39 (see drawing)
6. Carefully! Glue jumper/wires to P.C.B. for security

All of the above rework takes place on the component side of the board.

TSB 630002
Loud Distorted Note or System Freeze

Date: 9/14/98

Product(s) Affected: EIV & E64

SYMPTOM

This T.S.B. addresses two symptoms:

- System freezes intermittently while running EOS, and must be rebooted.
- System intermittently produces a random loud & distorted note when using the 48kHz output format

PROBLEM

Design flaw in IP750

EXPOSURE

All Model 6300 & Model 6400's that use 35ns or faster DRAMs in locations U49 to U52 and U57 to U60.

SOLUTION

Verify that IP860A is installed in location U46 on the main board.

Note: Use IP860A in E64's that have 35ns or faster DRAMs.

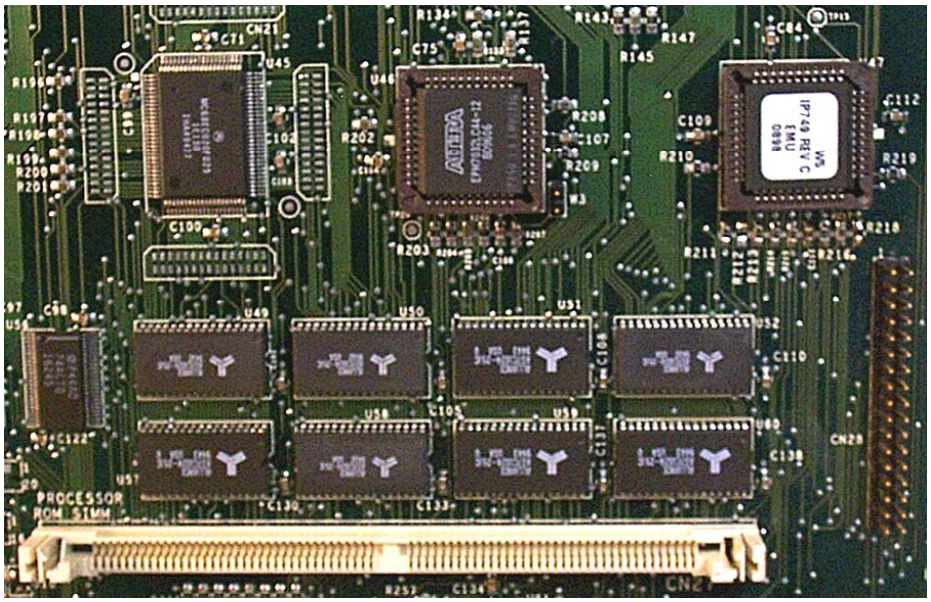

TSB630003
No Boot

Date: 9/14/98

Product(s) Affected: EIV & E64

Model Number: 6300 & 6400 Series

SYMPTOM
No boot, checksum error displayed on LCD

PROBLEM
Flash corruption bug

EXPOSURE
All Model 6300 & Model 6400 units that use 35nS or faster DRAMs

SOLUTION
1. Install IP749C in location U47 on main board.
2. Use in Model 6400's that have 35nS or faster DRAMS in locations U49 through U52 & U57 through U60.

TSB 630004
SCSI & ASCII Fails

Date: 9/14/98

Originator: Jeff Watson, Efren L. Ibarreta

Product(s) Affected: EIV & E64

Model Number: 6300 & 6400 Series

SYMPTOM

This TSB addresses two symptoms:

1. SCSI mounts very slowly on boot.
2. System will not read ASCII keyboard.

PROBLEM

SCSI & ASCII fuses blown open due to common hook-up errors such as connecting SCSI devices with power on.

EXPOSURE

6300's & 6400's with old-style non-resettable fuses.

SOLUTION

Install Polyswitch fuses (E-mu part number ZF309) in locations FS3 & FS4.

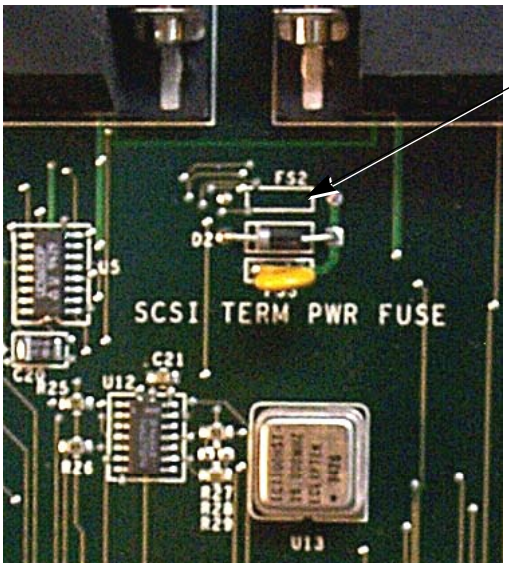

ADD HERE

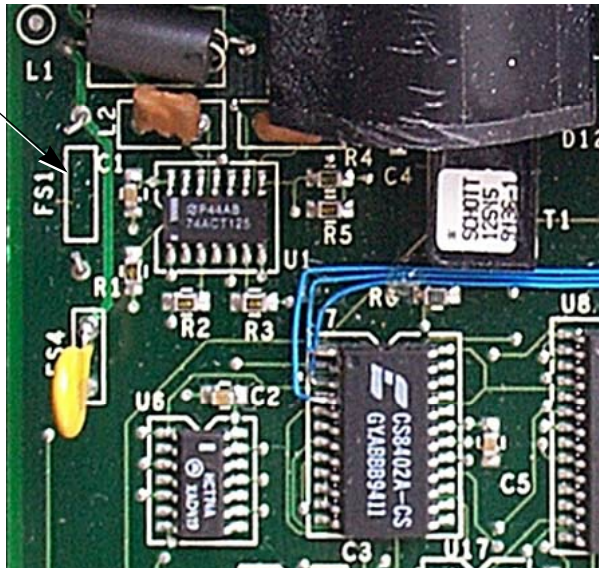

TSB 640001 Loud Distorted Note

Date: 9/14/98

Product(s) Affected: E64

Model Number: 6400

SYMPTOM
System intermittently produces a very loud distorted note

PROBLEM
Design Flaw in IP750

EXPOSURE
All Model 6400's with 70nS DRAMs.

SOLUTION
Install IP861A in location U46 on the main board.

TSB 680002 Flickering of L.C.D. Backlight

Date: 9/3/98

Product(s) Affected: e6400, E4X, E4XT, E-Synth rack

Model Number: 6800 series

SYMPTOM
L.C.D. Backlight flickers

PROBLEM
Backlight voltage is noisy

EXPOSURE
All 6800 units AP524-00 and AP524-01

SOLUTION
Add capacitor 100uF 25v (CA342) between jumper W7 and resistor R382

TSB 680003 AP441 L.C.D. has Dim Contrast

Date: 9/03/98

Product(s) Affected: EOS Rack units

Model Number: 6800 series

SYMPTOM
L.C.D. has poor contrast at -8 setting in software. Contrast isn't dark enough.

PROBLEM
AP441 Display requires more contrast current

EXPOSURE
All E6400, E4X & E4XT

SOLUTION
Change AP524-00 & AP524-01 to use 0 ohm (RR420) at location R382 & add jumper (JR334) to location W6

TSB 680004 Backlight Appears Red

Date: 9/3/98

Product(s) Affected: EOS Rack units

Model Number: 6800 Series

SYMPTOM
Backlight has a red appearance.

PROBLEM
The backlight voltage is to high, possibly decreasing life of the display.

EXPOSURE
All 6800 units with AP524-00 and AP524-01

SOLUTION
Perform rework of 2 cuts and 2 jumps to AP524-00 & AP524-01

TSB 680005 Loud Distorted Note

Date: 9/14/98

Product(s) Affected: E4X, E4XT, E6400, E4K

Model Number: Series 6800 & 6900

SYMPTOM
Intermittent loud distorted note when using 48kHz output format.

PROBLEM
Design flaw in IP821

EXPOSURE

All E4K's & some 6800 series Rack units.

SOLUTION
Replace IP821A (Location U18 on main CPU board in keyboard) with IP 872A. (Location U45 on main CPU board in rack).

TSB 680006 Intermittent No Boot

Date: 9/14/98

Product(s) Affected: E4X, E4XT, E6400, E4K

Model Number: Series 6800 & 6900

SYMPTOM
Intermittent No Boot

PROBLEM
Insufficient refresh cycles before RAM access.

EXPOSURE
6800 & 6900 Series

SOLUTION
Install IP822D in location U80 on rack units and U49 on keyboards

TSB 680007 Audio Distortion

Date: 9/14/98

Product(s) Affected: E4k , E4x , E4xt , E6400

Model Number: Series 6800 & 6900

SYMPTOM
Audio Distortion

PROBLEM
Sound memory fails when 128 megabytes is installed

EXPOSURE
All Model 6800 & 6900

SOLUTION
Remove resistors R14 through R25. Install (12) 10 ohm resistors in locations R14 through R25.

TSB 680008 System Freeze/Lock Up

Date: 9/24/98

Product(s) Affected: E6400 , E4X , E4xt , E4K

Model Number: 6800 & 6900 Series

SYMPTOM
System freezes/locks up when receiving MIDI. This is a thermal failure that only happens if the system is warm.

PROBLEM
‘96 date code, ST SGS Thompson 68901 at location U44 on AP524 Main boards.

EXPOSURE
All Model 6800 & 6900's

SOLUTION
Replace with 97 or newer date code ST SGS Thompson 68901
Motorola 68901 parts not affected.